JUNGWOO MOTOR

The Innovation Leader
in Motor Industry

HEAD OFFICE ▶
90 Hwanggeum1-ro, Yangchon-eup, Gimpo City,
Gyeonggi Province, Republic of Korea
Tel: +82-10-5421-4172 **Fax:** +82-31-996-4175
e-mail: export3@jem21.net **Website:** www.jem21.net

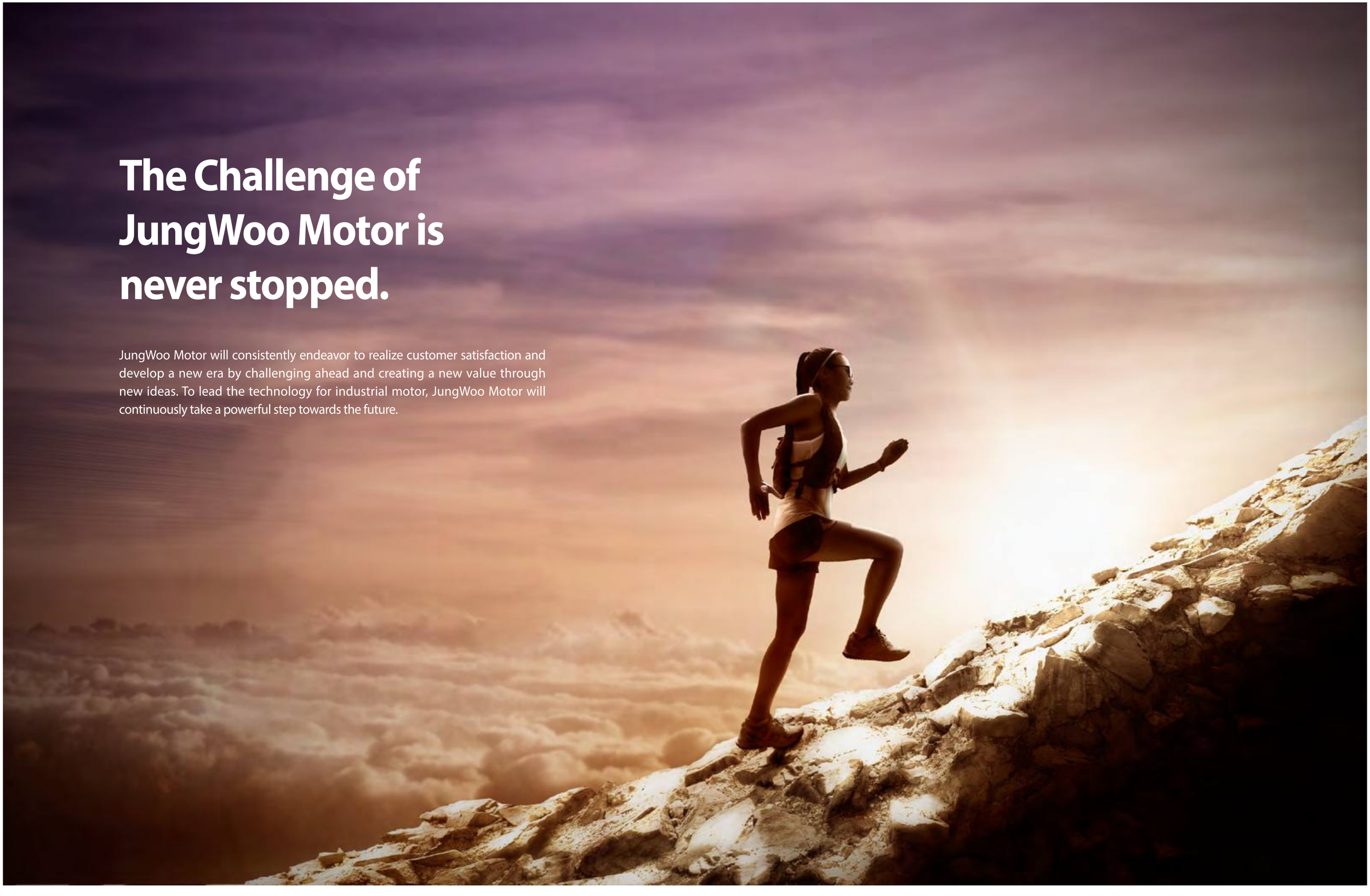

The Challenge of JungWoo Motor is never stopped.

JungWoo Motor will consistently endeavor to realize customer satisfaction and develop a new era by challenging ahead and creating a new value through new ideas. To lead the technology for industrial motor, JungWoo Motor will continuously take a powerful step towards the future.

JungWoo Motor Co., Ltd. leading the technology for industrial motor

JungWoo Motor Co., Ltd. has accomplished outstanding results in the area of industrial motor manufacturing technology, and secured technical skills and competitiveness through diverse projects. In particular, we have been satisfying our customer companies with the differentiated know-how in the area of motor on demand. In addition, we are endeavoring to realize 100% customer satisfaction through a perfect service.

JungWoo Motor Co., Ltd. is a specialized company for developing and producing industrial motors.

Company Name	**JungWoo Motor Co., Ltd.**
Date of Establishment	**July 1998**
Corporate Registration Number	**136-81-27928**
Address	**90 Hwanggeum1-ro, Yangchon-eup, Gimpo City, Gyeonggi Province, Republic of Korea**
Tel	**82-31-996-4172~4**
Fax	**82-31-996-4175**
CEO	**Kim, Sin Ho**

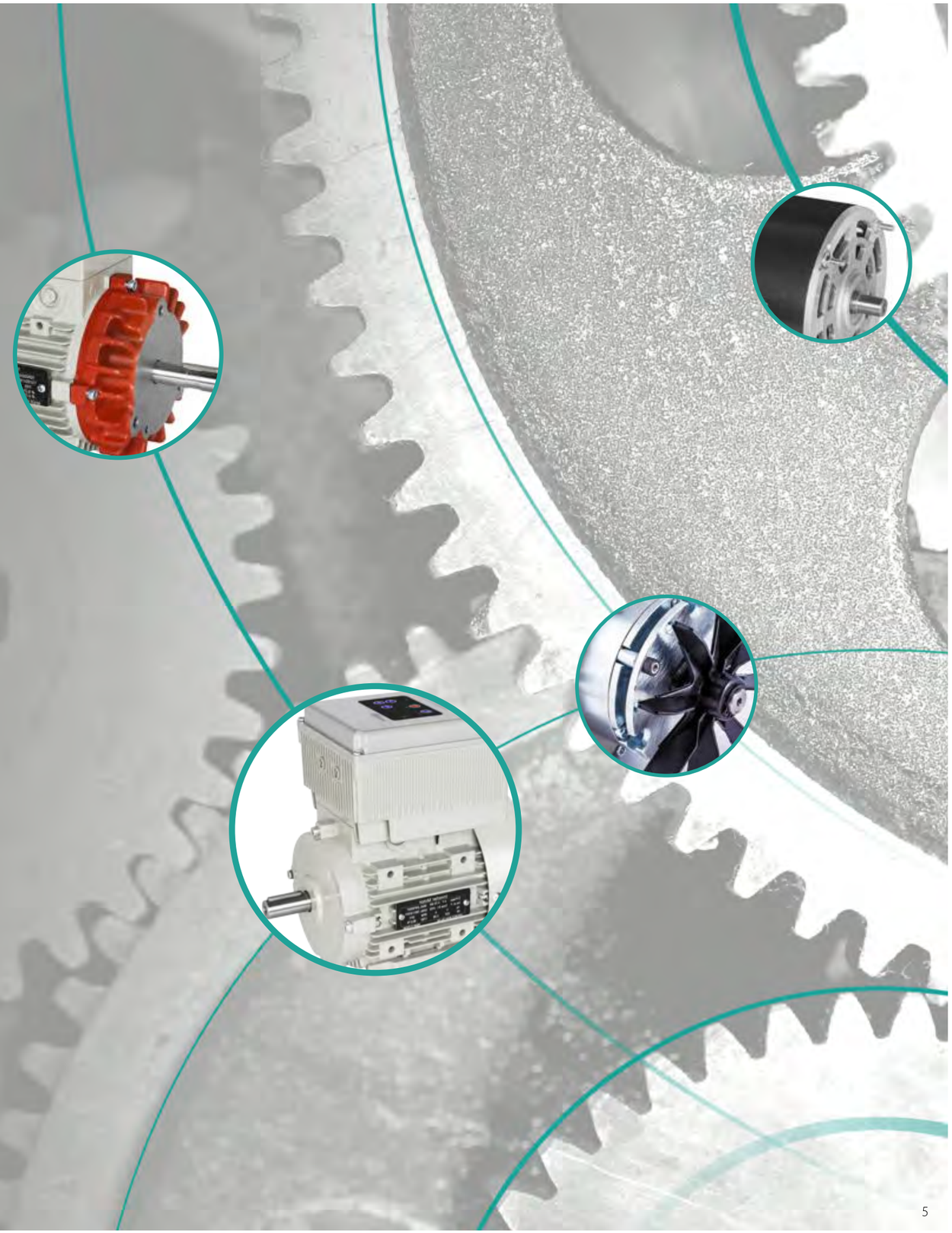

CEO Message

We will be the enterprise that realizes customer impression with technology, quality and trust.

Our company has been growing up as a specialized one for manufacturing industrial motors ever since its establishment in 1998, and we are possessing and producing diverse products by prioritizing customer satisfaction and quality. We are endeavoring to provide the industrial motor business with a new vitality by developing and proliferating new growth engine in the overall industry. Apart from the motor on demand which already has a good reputation, we are satisfying our customers with a perfect and speedy service, and endeavoring for the satisfactory and prosperous future of our customers. All the members of our company will try the best to realize our customers' satisfaction and trust. We asking our customers for a full support in the future as well, and wishing you all the happiness and health. We will be the competitive JungWoo Motor Co., Ltd. a strong company in terms of quality, period of delivery and price.

CEO of
JungWoo Motor Co., Ltd. Sinho Kim

History

1998
- Establishment of the company
- Beginning of manufacturing industrial motors

1999
- Acquiring CE certification
- Establishing a specialized department for R&D (Institute of Technology)

2001
- Acquiring KS A 9001: ISO 9001 certifications

2006
- Acquiring certification for CLEAN business site

2007
- Adopting a vacuum immersion facility (Improving quality and insulation)

2008
- Acquiring additional CE certification

2009
- Selected as a small and medium business with innovative technology
- Acquiring venture business certification
- Acquiring safety certification for single phase explosion-proof enclosure motor

2010
- Registered as a protection device manufacturing business
- Acquiring certification for high-efficiency apparatus

2012
- Acquiring UL certification
- Establishing an affiliated research institute

2014
- Acquiring MAINBZ certification

2015
- Certified as a promising small and medium business in Gyeonggi-do
- Applying SAP ERP system

2016
- Acquiring safety certification for three phase explosion-proof enclosure motor
- Appointed for export supporting company by KOTRA

2017
- Corporate HQ/factory expansion, construction and relocation (Gimpo Yangchon Industrial Complex)

2018
- INNO-BIZ certification
- Appointment as a small and medium-sized enterprise with emphasis on talent promotion

Contents

World Best JUNGWOO MOTOR

10 P
Three-Phase Induction Motor
B3, B5, B35, B14, B34

26 P
Premium Efficiency Three-Phase Induction Motor
B3, B5, B35, B14, B34

42 P
Single-Phase Induction Motor (Run)
B3, B5, B35, B14, B34

56 P
Brake Induction Motor
Three-Phase (IE1, IE2, IE3)
B3, B5

64 P
Explosion Proof Induction Motor
Three-Phase, Single-Phase

18 P
High Efficiency Three-Phase Induction Motor
B3, B5, B35, B14, B34

34 P
Single-Phase Induction Motor (Run & Start)
B3, B5, B35, B14, B34

50 P
Hydraulic Induction Motor
Three-Phase (IE1, IE2, IE3)
Single-Phase (Run & Start)

60 P
Inverter Motor
Three-Phase, Single-Phase
B3, B5, B35, B14, B34

68 P
Customized & Non-Standard Motors
Pump, Air duct, Hoist, Cooler, etc.

IE1 Series

THREE-PHASE INDUCTION MOTOR

B3 Horizontal Type
B5 Vertical Type
B35 Horizontal-Vertical Type
B14 C-Face Type
B34 Horizontal C-Face Type

IE1 Series

Horizontal Type

B3 Three-Phase Induction Motor

Scale

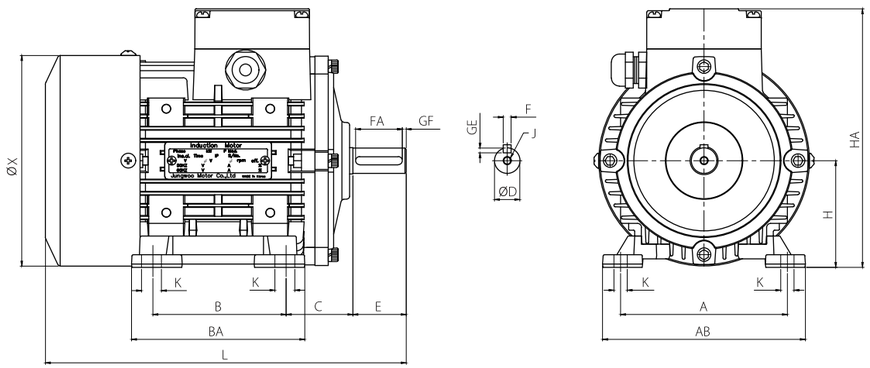

Specification

Frame No.	Output (kW)				Dimensions (mm)																	Bearing	
	2P	4P	6P	8P	H	A	AB	K	B	BA	C	D	E	F	FA	GE	GF	HA	X	L	J	DE	ODE
63M	0.2	0.2	-	-	63	100	124	7	80	99	40	11	23	4	18	2.5	3	157	124	197	-	6202	6202
71M	0.4	0.4	0.2	-	71	112	132	7	90	118	45	14	30	5	25	3	3	174	140	226	M5x15	6203	6202
	0.55	0.55																					
80M	0.75	0.55	0.4	0.2	80	125	152	10	100	130	50	19	40	6	35	3.5	3	194	158	270.5	M6x15	6204	6203
	0.9																						
	1.1	0.75																					
90L	1.5	1.1	0.75	0.4	90	140	168	10	125	162	56	24	50	8	40	4	5	209	176	315.5	M8x20	6205	6204
	2.2	1.5																					
100L	3.0	2.2	1.5	0.75	100	160	199	12	140	178	63	28	60	8	50	4	5	240	198	363	M10x25	6206	6205
		3.0																					
112M	3.7	-	-	-	112	190	219	12	140	186	63	28	60	8	50	4	5	252	198	363	M10x25	6206	6205
	-	3.7	2.2	1.5			232			180	70							262	220	378			
132S	5.5	-	-	-	132	216	258	12	140	192	83	38	80	10	70	5	5	282	220	403	M12x30	6208	6206
	7.5	5.5								194	89							310	259.4	445			
132M	-	7.5	-	-	132	216	258	12	178	222	89	38	80	10	70	5	5	310	259.4	464	M12x30	6208	6206
160M	11	11	7.5		160	254	304	15	210	304	108	42	110	12	100	5	5	403	315	561	M12x30	6309	6308
	15																						
160L	18.5	15	11		160	254	304	15	254	304	108	42	110	12	100	5	5	403	315	561	M12x30	6309	6308

* The specification is subject to change without notice in advance for the purpose of quality improvement.
* Please contact us for customized model.

IE1 Series

Vertical Type

B5 Three-Phase Induction Motor

Scale

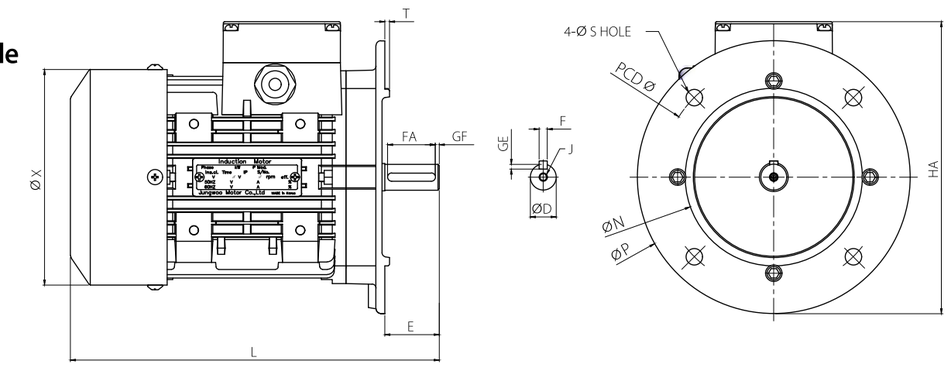

Specification

Flange No.	Frame No.	Output (kW)				Dimensions (mm)														Bearing	
		2P	4P	6P	8P	Hole PCD	Hole S	D	E	F	FA	GE	GF	HA	X	L	N	P	T	J	DE	ODE
FF115	63M	0.2	0.2	-	-	115	10	11	23	4	18	2.5	3	164	124	197	95	140	3	-	6202	6202
FF130	71M	0.4	0.4	0.2	-	130	10	14	30	5	25	3	3	183	140	226	110	160	3	M5x15	6203	6202
		0.55	0.55																			
FF165	80M	0.75	0.55	0.4	0.2	165	12	19	40	6	35	3.5	3	214	158	270.5	130	200	3.5	M6x15	6204	6203
		0.9																				
		1.1	0.75																			
	90L	1.5	1.1	0.75	0.4	165	12	24	50	8	40	4	5	219	176	315.5	130	200	3.5	M8x20	6205	6204
		2.2	1.5																			
FF215	100L	3.0	2.2	1.5	0.75	215	15	28	60	8	50	4	5	265	198	363	180	250	4	M10x25	6206	6205
		3.7	3.0																			
	112M	-	3.7	2.2	1.5	215	15	28	60	8	50	4	5	275	220	378	180	250	4	M10x25	6206	6205
FF265	112M	5.5	-	-	-	265	15	38	80	10	70	5	5	300	220	403	230	300	4	M12x30	6208	6206
	132S	7.5	5.5	-	-	265	15	38	80	10	70	5	5	328	259.4	445	230	300	4	M12x30	6208	6206
	132M	-	7.5	-	-	265	15	38	80	10	70	5	5	328	259.4	464	230	300	4	M10x25	6208	6206
		11	-	-	-	300	19	42	110	12	100			353		510	250	350	5	M12x30	6310	6307
FF300	160M	11	11	7.5	-	300	19	42	110	12	100	5	5	421	315	561	250	350	5	M12x30	6309	6308
		15																				
	160L	18.5	15	11		300	19	42	110	12	100	5	5	421	315	561	250	350	5	M12x30	6309	6308

* The specification is subject to change without notice in advance for the purpose of quality improvement.
* Please contact us for customized model.

IE1
Series

Horizontal-Vertical Type

B35 Three-Phase Induction Motor

Scale

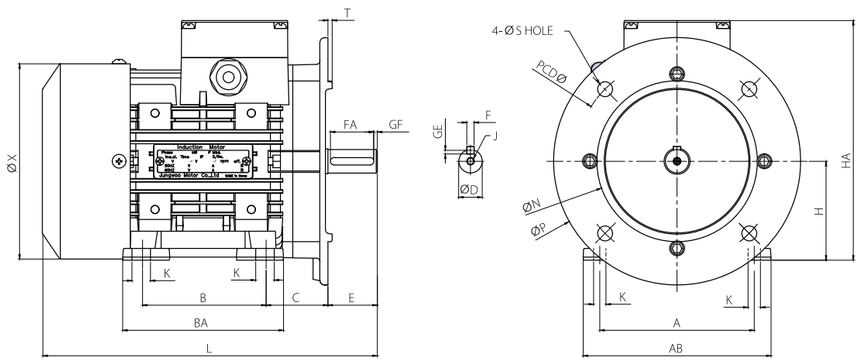

Specification

Flange No.	Frame No.	Output (kW) 2P	4P	6P	8P	Dimensions (mm) Hole PCD	Hole S	H	K	A	AB	B	BA	C	D	E	F	FA	GE	GF	HA	X	N	P	T	L	J	Bearing DE	ODE
FF115	63M	0.2	0.2	-	-	115	10	63	7	100	124	80	99	40	11	23	4	18	2.5	3	157	124	95	140	3	197	-	6202	6202
FF130	71M	0.4	0.4	0.2	-	130	10	71	7	112	132	90	118	45	14	30	5	25	3	3	174	140	110	160	3	226	M5x15	6203	6202
		0.55	0.55																										
FF165	80M	0.75	0.55	0.4	0.2	165	12	80	10	125	152	100	130	50	19	40	6	35	3.5	3	194	158	130	200	3.5	270.5	M6x15	6204	6203
		0.9																											
		1.1	0.75																										
	90L	1.5	1.1	0.75	0.4	165	12	90	10	140	168	125	162	56	24	50	8	40	4	5	209	176	130	200	3.5	315.5	M8x20	6205	6204
		2.2	1.5																										
FF215	100L	3.0	2.2	1.5	0.75	215	15	100	12	160	199	140	178	63	28	60	8	50	4	5	240	198	180	250	4	363	M10x25	6206	6205
			3.0																										
	112M	3.7	-	-	-	215	15	112	12	190	219	140	186	63	28	60	8	50	4	5	252	198	180	250	4	363	M10x25	6206	6205
		-	3.7	2.2	1.5						232		180	70							262	220				378			
FF265	132S	5.5	-	-	-	265	15	132	12	216	258	140	192	83	38	80	10	70	5	5	282	220	230	300	4	403	M12x30	6208	6206
		7.5	5.5										194	89							310	259.4				445			
	132M	-	7.5	-	-	265	15	132	12	216	258	178	222	89	38	80	10	70	5	5	310	259.4	230	300	4	464	M12x30	6208	6206
FF300	160M	11	11	7.5		300	19	160	15	254	304	210	304	108	42	110	12	100	5	5	403	315	250	350	5	561	M12x30	6309	6308
		15																											
	160L	18.5	15	11		300	19	160	15	254	304	254	304	108	42	110	12	100	5	5	403	315	250	350	5	561	M12x30	6309	6308

* The specification is subject to change without notice in advance for the purpose of quality improvement.
* Please contact us for customized model.

C-Face Type

B14 Three-Phase Induction Motor

IE1
Series

Scale

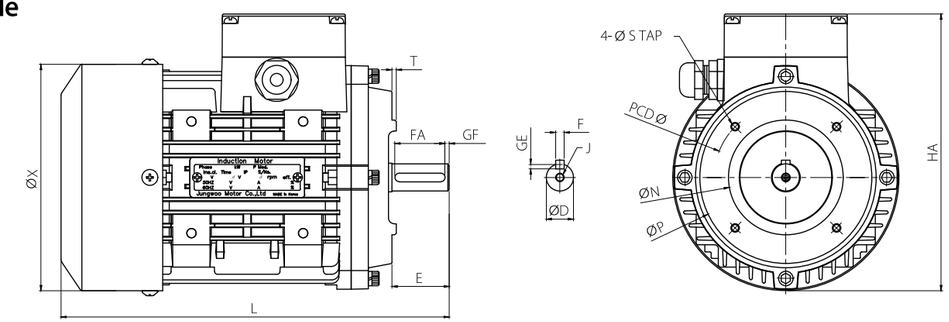

Specification

Flange No.	Frame No.	Output (kW) 2P	4P	6P	8P	Dimensions (mm) Hole PCD	Hole TAP	D	E	F	FA	GE	GF	HA	X	L	N	P	T	J	Bearing DE	ODE
FT75	63M	0.2	0.2	-	-	75	M5	11	23	4	18	2.5	3	155	124	197	60	90	2.5	-	6202	6202
FT85	71M	0.4	0.4	0.2	-	85	M6	14	30	5	25	3	3	173	140	226	70	105	2.5	M5x15	6203	6202
		0.55	0.55																			
FT100	80M	0.75	0.55	0.4	0.2	100	M6	19	40	6	35	3.5	3	193	158	270.5	80	120	3	M6x15	6204	6203
		0.9																				
		1.1	0.75																			
FT115	90L	1.5	1.1	0.75	0.4	115	M8	24	50	8	40	4	5	207	176	315.5	95	140	3.5	M8x20	6205	6204
		2.2	1.5																			
FT130	100L	3.0	2.2	1.5	0.75	130	M8	28	60	8	50	4	5	239	198	363	110	160	3.5	M10x25	6206	6205
		3.7	3.0																			
	112M	-	3.7	2.2	1.5	130	M8	28	60	8	50	4	5	260	220	378	110	160	3.5	M10x25	6206	6205
FT165	112M	5.5	-	-	-	165	M10	38	80	10	70	5	5	260.5	220	403	130	196	3.5	M12x30	6208	6206
	132S	7.5	5.5	-	-	165	M10	38	80	10	70	5	5	308	259.4	445	130	200	3.5	M12x30	6208	6206
	132M	-	7.5	-	-	165	M10	38	80	10	70	5	5	308	259.4	464	130	200	3.5	M12x30	6208	6206
FT215	160M	11	11	7.5		215	M12	42	110	12	100	5	5	403	315	561	180	250	5	M12x30	6309	6308
		15																				
FT265	160L	18.5	15	11		265	M12	42	110	12	100	5	5	403	315	561	230	250	5	M12x30	6309	6308

* The specification is subject to change without notice in advance for the purpose of quality improvement.
* Please contact us for customized model.

IE1 Series

Horizontal C-Face Type

B34 Three-Phase Induction Motor

Scale

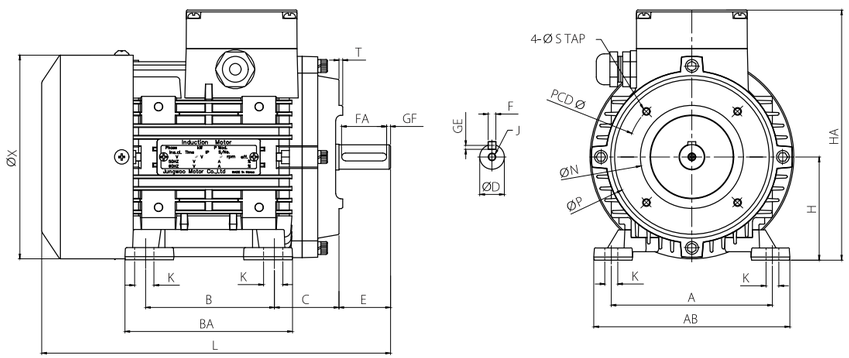

Specification

Flange No.	Frame No.	Output (kW)				Dimensions (mm)																						Bearing	
		2P	4P	6P	8P	Hole PCD	Hole TAP	H	A	AB	K	B	BA	C	D	E	F	FA	GE	GF	HA	X	L	N	P	T	J	DE	ODE
FT75	63M	0.2	0.2	-	-	75	M5	63	100	124	7	80	99	40	11	23	4	18	2.5	3	157	124	197	60	90	2.5	-	6202	6202
FT85	71M	0.4	0.4	0.2	-	85	M6	71	112	132	7	90	118	45	14	30	5	25	3	3	174	140	226	70	105	2.5	M5x15	6203	6202
		0.55	0.55																										
FT100	80M	0.75	0.55	0.4	0.2	100	M6	80	125	152	10	100	130	50	19	40	6	35	3.5	3	194	158	270.5	80	120	3	M6x15	6204	6203
		0.9																											
		1.1	0.75																										
FT115	90L	1.5	1.1	0.75	0.4	115	M8	90	140	168	10	125	162	56	24	50	8	40	4	5	209	176	315.5	95	140	3.5	M8x20	6205	6204
		2.2	1.5																										
FT130	100L	3.0	2.2	1.5	0.75	130	M8	100	160	199	12	140	178	63	28	60	8	50	4	5	240	198	363	110	160	3.5	M10x25	6206	6205
			3.0																										
	112M	3.7	-	-	-	130	M8	112	190	219	12	140	186	63	28	60	8	50	4	5	252	198	363	110	160	3.5	M10x25	6206	6205
		-	3.7	2.2	1.5					232			180	70							262	220	378						
FT165	132S	5.5	-	-	-	165	M10	132	216	258	12	140	192	83	38	80	10	70	5	5	282	220	403	130	196	3.5	M12x30	6208	6206
		7.5	5.5										194	89							310	259.4	445		200				
	132M	-	7.5	-	-	165	M10	132	216	258	12	178	222	89	38	80	10	70	5	5	310	259.4	464	130	200	3.5	M12x30	6208	6206
FT215	160M	11	11	7.5		215	M12	160	254	304	15	210	304	108	42	110	12	100	5	5	403	315	561	180	250	5	M12x30	6309	6308
		15																											
FT265	160L	18.5	15	11		265	M12	160	254	304	15	254	304	108	42	110	12	100	5	5	403	315	561	230	250	5	M12x30	6309	6308

* The specification is subject to change without notice in advance for the purpose of quality improvement.
* Please contact us for customized model.

IE2 Series

HIGH EFFICIENCY THREE-PHASE INDUCTION MOTOR

B3 Horizontal Type
B5 Vertical Type
B35 Horizontal-Vertical Type
B14 C-Face Type
B34 Horizontal C-Face Type

IE2
Series

Horizontal Type

B3 High Efficiency Three-Phase Induction Motor

Scale

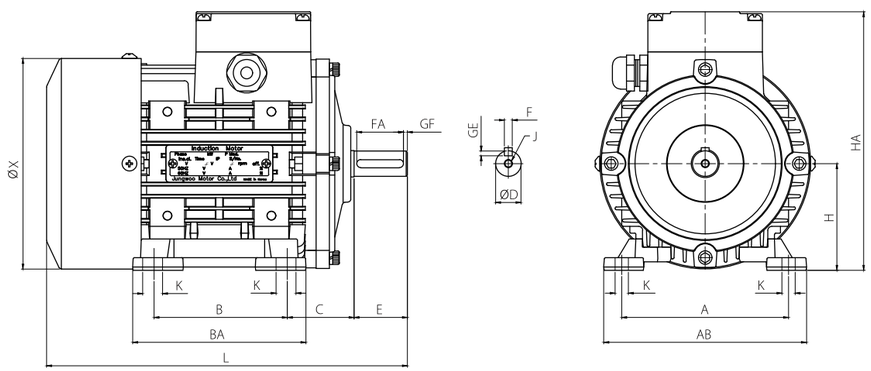

Specification

Frame No.	Output (kW)				Dimensions (mm)																	Bearing	
	2P	4P	6P	8P	H	A	AB	K	B	BA	C	D	E	F	FA	GE	GF	HA	X	L	J	DE	ODE
63M	0.2	0.2	-	-	63	100	124	7	80	99	40	11	23	4	18	2.5	3	157	124	197	-	6202	6202
71M	0.4	0.4	0.2	-	71	112	132	7	90	118	45	14	30	5	25	3	3	174	140	226	M5x15	6203	6202
	0.55	0.55																					
80M	0.75	0.55	0.4	0.2	80	125	152	10	100	130	50	19	40	6	35	3.5	3	194	158	270.5	M6x15	6204	6203
	0.9																						
	1.1	0.75																					
90L	1.5	1.1	0.75	0.4	90	140	168	10	125	162	56	24	50	8	40	4	5	209	176	315.5	M8x20	6205	6204
	2.2	1.5																					
100L	3.0	2.2	1.5	0.75	100	160	199	12	140	178	63	28	60	8	50	4	5	240	198	363	M10x25	6206	6205
		3.0																					
112M	3.7	-	-	-	112	190	219	12	140	186	63	28	60	8	50	4	5	252	198	363	M10x25	6206	6205
	-	3.7	2.2	1.5			232			180	70							262	220	378			
132S	5.5	-	-	-	132	216	258	12	140	192	83	38	80	10	70	5	5	282	220	403	M12x30	6208	6206
	7.5	5.5								194	89							310	259.4	445			
132M	-	7.5	-	-	132	216	258	12	178	222	89	38	80	10	70	5	5	310	259.4	464	M12x30	6208	6206
160M	11	11	7.5		160	254	304	15	210	304	108	42	110	12	100	5	5	403	315	561	M12x30	6309	6308
	15																						
160L	18.5	15	11		160	254	304	15	254	304	108	42	110	12	100	5	5	403	315	561	M12x30	6309	6308

* The specification is subject to change without notice in advance for the purpose of quality improvement.
* Please contact us for customized model.

Vertical Type

B5 High Efficiency Three-Phase Induction Motor

IE2
Series

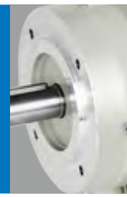

Scale

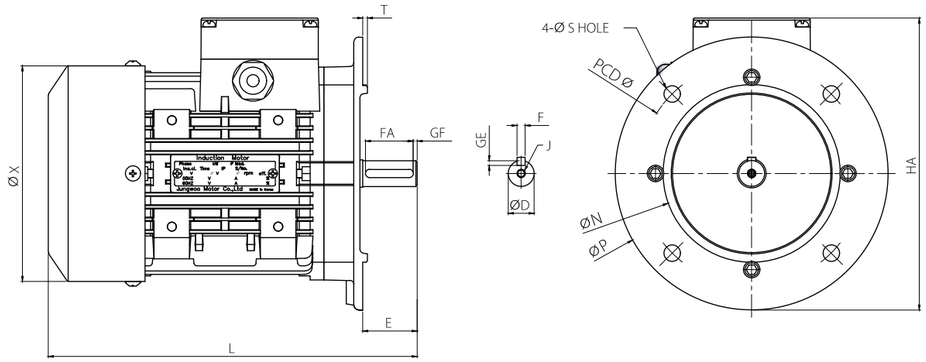

Specification

Flange No.	Frame No.	Output (kW)				Dimensions (mm)															Bearing	
		2P	4P	6P	8P	Hole PCD	Hole S	D	E	F	FA	GE	GF	HA	X	L	N	P	T	J	DE	ODE
FF115	63M	0.2	0.2	-	-	115	10	11	23	4	18	2.5	3	164	124	197	95	140	3	-	6202	6202
FF130	71M	0.4	0.4	0.2	-	130	10	14	30	5	25	3	3	183	140	226	110	160	3	M5x15	6203	6202
		0.55	0.55																			
FF165	80M	0.75	0.55	0.4	0.2	165	12	19	40	6	35	3.5	3	214	158	270.5	130	200	3.5	M6x15	6204	6203
		0.9																				
		1.1	0.75																			
	90L	1.5	1.1	0.75	0.4	165	12	24	50	8	40	4	5	219	176	315.5	130	200	3.5	M8x20	6205	6204
		2.2	1.5																			
FF215	100L	3.0	2.2	1.5	0.75	215	15	28	60	8	50	4	5	265	198	363	180	250	4	M10x25	6206	6205
		3.7	3.0																			
	112M	-	3.7	2.2	1.5	215	15	28	60	8	50	4	5	275	220	378	180	250	4	M10x25	6206	6205
FF265	112M	5.5	-	-	-	265	15	38	80	10	70	5	5	300	220	403	230	300	4	M12x30	6208	6206
	132S	7.5	5.5	-	-	265	15	38	80	10	70	5	5	328	259.4	445	230	300	4	M12x30	6208	6206
	132M	-	7.5	-	-	265	15	38	80	10	70	5	5	328	259.4	464	230	300	4	M10x25	6208	6206
		11	-	-	-	300	19	42	110	12	100			353		510	250	350	5	M12x30	6310	6307
FF300	160M	11	11	7.5	-	300	19	42	110	12	100	5	5	421	315	561	250	350	5	M12x30	6309	6308
		15																				
	160L	18.5	15	11		300	19	42	110	12	100	5	5	421	315	561	250	350	5	M12x30	6309	6308

* The specification is subject to change without notice in advance for the purpose of quality improvement.
* Please contact us for customized model.

IE2 Series

Horizontal-Vertical Type

B35 High Efficiency Three-Phase Induction Motor

Scale

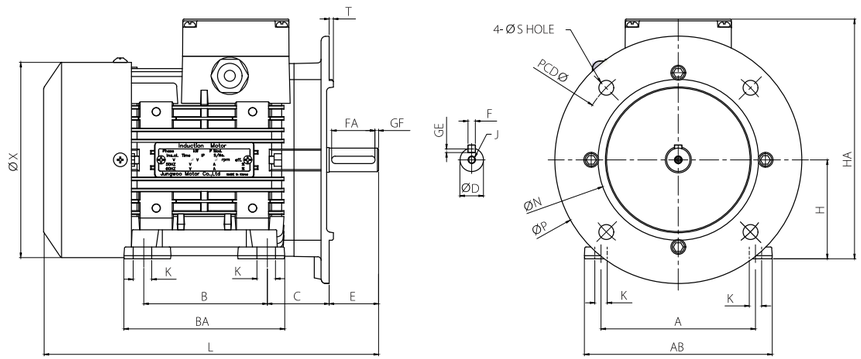

Specification

Flange No.	Frame No.	Output (kW) 2P	4P	6P	8P	Dimensions (mm) Hole PCD	Hole S	H	K	A	AB	B	BA	C	D	E	F	FA	GE	GF	HA	X	N	P	T	L	J	Bearing DE	ODE
FF115	63M	0.2	0.2	-	-	115	10	63	7	100	124	80	99	40	11	23	4	18	2.5	3	157	124	95	140	3	197	-	6202	6202
FF130	71M	0.4	0.4	0.2	-	130	10	71	7	112	132	90	118	45	14	30	5	25	3	3	174	140	110	160	3	226	M5x15	6203	6202
		0.55	0.55																										
FF165	80M	0.75	0.55	0.4	0.2	165	12	80	10	125	152	100	130	50	19	40	6	35	3.5	3	194	158	130	200	3.5	270.5	M6x15	6204	6203
		0.9																											
		1.1	0.75																										
	90L	1.5	1.1	0.75	0.4	165	12	90	10	140	168	125	162	56	24	50	8	40	4	5	209	176	130	200	3.5	315.5	M8x20	6205	6204
		2.2	1.5																										
FF215	100L	3.0	2.2	1.5	0.75	215	15	100	12	160	199	140	178	63	28	60	8	50	4	5	240	198	180	250	4	363	M10x25	6206	6205
			3.0																										
	112M	3.7	-	-	-	215	15	112	12	190	219	140	186	63	28	60	8	50	4	5	252	198	180	250	4	363	M10x25	6206	6205
		-	3.7	2.2	1.5						232		180	70							262	220				378			
FF265	132S	5.5	-	-	-	265	15	132	12	216	258	140	192	83	38	80	10	70	5	5	282	220	230	300	4	403	M12x30	6208	6206
		7.5	5.5										194	89							310	259.4				445			
	132M	-	7.5	-	-	265	15	132	12	216	258	178	222	89	38	80	10	70	5	5	310	259.4	230	300	4	464	M12x30	6208	6206
FF300	160M	11	11	7.5		300	19	160	15	254	304	210	304	108	42	110	12	100	5	5	403	315	250	350	5	561	M12x30	6309	6308
		15																											
	160L	18.5	15	11		300	19	160	15	254	304	254	304	108	42	110	12	100	5	5	403	315	250	350	5	561	M12x30	6309	6308

* The specification is subject to change without notice in advance for the purpose of quality improvement.
* Please contact us for customized model.

IE2 Series

C-Face Type

B14 High Efficiency Three-Phase Induction Motor

Scale

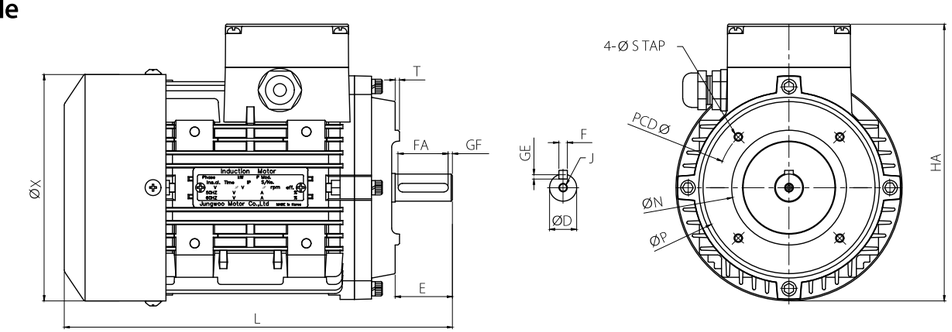

Specification

Flange No.	Frame No.	Output (kW) 2P	4P	6P	8P	Dimensions (mm) Hole PCD	Hole TAP	D	E	F	FA	GE	GF	HA	X	L	N	P	T	J	Bearing DE	ODE
FT75	63M	0.2	0.2	-	-	75	M5	11	23	4	18	2.5	3	155	124	197	60	90	2.5	-	6202	6202
FT85	71M	0.4	0.4	0.2	-	85	M6	14	30	5	25	3	3	173	140	226	70	105	2.5	M5x15	6203	6202
		0.55	0.55																			
FT100	80M	0.75	0.55	0.4	0.2	100	M6	19	40	6	35	3.5	3	193	158	270.5	80	120	3	M6x15	6204	6203
		0.9																				
		1.1	0.75																			
FT115	90L	1.5	1.1	0.75	0.4	115	M8	24	50	8	40	4	5	207	176	315.5	95	140	3.5	M8x20	6205	6204
		2.2	1.5																			
FT130	100L	3.0	2.2	1.5	0.75	130	M8	28	60	8	50	4	5	239	198	363	110	160	3.5	M10x25	6206	6205
		3.7	3.0																			
	112M	-	3.7	2.2	1.5	130	M8	28	60	8	50	4	5	260	220	378	110	160	3.5	M10x25	6206	6205
FT165	112M	5.5	-	-	-	165	M10	38	80	10	70	5	5	260.5	220	403	130	196	3.5	M12x30	6208	6206
	132S	7.5	5.5	-	-	165	M10	38	80	10	70	5	5	308	259.4	445	130	200	3.5	M12x30	6208	6206
	132M	-	7.5	-	-	165	M10	38	80	10	70	5	5	308	259.4	464	130	200	3.5	M12x30	6208	6206
FT215	160M	11	11	7.5		215	M12	42	110	12	100	5	5	403	315	561	180	250	5	M12x30	6309	6308
		15																				
FT265	160L	18.5	15	11		265	M12	42	110	12	100	5	5	403	315	561	230	250	5	M12x30	6309	6308

* The specification is subject to change without notice in advance for the purpose of quality improvement.
* Please contact us for customized model.

IE2 Series

Horizontal C-Face Type

B34 High Efficiency Three-Phase Induction Motor

Scale

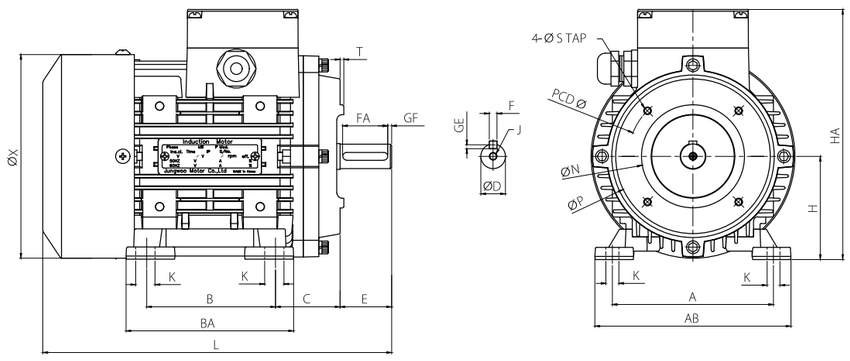

Specification

Flange No.	Frame No.	Output (kW)				Dimensions (mm)																						Bearing	
		2P	4P	6P	8P	Hole PCD	Hole TAP	H	A	AB	K	B	BA	C	D	E	F	FA	GE	GF	HA	X	L	N	P	T	J	DE	ODE
FT75	63M	0.2	0.2	-	-	75	M5	63	100	124	7	80	99	40	11	23	4	18	2.5	3	157	124	197	60	90	2.5	-	6202	6202
FT85	71M	0.4	0.4	0.2	-	85	M6	71	112	132	7	90	118	45	14	30	5	25	3	3	174	140	226	70	105	2.5	M5x15	6203	6202
		0.55	0.55																										
FT100	80M	0.75	0.55	0.4	0.2	100	M6	80	125	152	10	100	130	50	19	40	6	35	3.5	3	194	158	270.5	80	120	3	M6x15	6204	6203
		0.9																											
		1.1	0.75																										
FT115	90L	1.5	1.1	0.75	0.4	115	M8	90	140	168	10	125	162	56	24	50	8	40	4	5	209	176	315.5	95	140	3.5	M8x20	6205	6204
		2.2	1.5																										
FT130	100L	3.0	2.2	1.5	0.75	130	M8	100	160	199	12	140	178	63	28	60	8	50	4	5	240	198	363	110	160	3.5	M10x25	6206	6205
			3.0																										
	112M	3.7	-	-	-	130	M8	112	190	219	12	140	186	63	28	60	8	50	4	5	252	198	363	110	160	3.5	M10x25	6206	6205
		-	3.7	2.2	1.5					232			180	70							262	220	378						
FT165	132S	5.5	-	-	-	165	M10	132	216	258	12	140	192	83	38	80	10	70	5	5	282	220	403	130	196	3.5	M12x30	6208	6206
		7.5	5.5										194	89							310	259.4	445		200				
	132M	-	7.5	-	-	165	M10	132	216	258	12	178	222	89	38	80	10	70	5	5	310	259.4	464	130	200	3.5	M12x30	6208	6206
FT215	160M	11	11	7.5		215	M12	160	254	304	15	210	304	108	42	110	12	100	5	5	403	315	561	180	250	5	M12x30	6309	6308
		15																											
FT265	160L	18.5	15	11		265	M12	160	254	304	15	254	304	108	42	110	12	100	5	5	403	315	561	230	250	5	M12x30	6309	6308

* The specification is subject to change without notice in advance for the purpose of quality improvement.
* Please contact us for customized model.

Product Guide

IE3 Series

PREMIUM EFFICIENCY THREE-PHASE INDUCTION MOTOR

B3 Horizontal Type
B5 Vertical Type
B35 Horizontal-Vertical Type
B14 C-Face Type
B34 Horizontal C-Face Type

IE3 Series

Horizontal Type

B3 Premium Efficiency Three-Phase Induction Motor

Scale

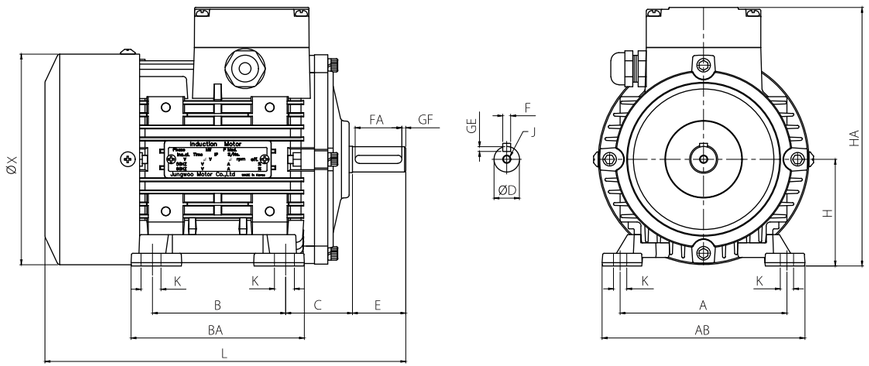

Specification

Frame No.	Output (kW)				Dimensions (mm)																	Bearing	
	2P	4P	6P	8P	H	A	AB	K	B	BA	C	D	E	F	FA	GE	GF	HA	X	L	J	DE	ODE
63M	0.2	0.2	-	-	63	100	124	7	80	99	40	11	23	4	18	2.5	3	157	124	197	-	6202	6202
71M	0.4	0.4	0.2	-	71	112	132	7	90	118	45	14	30	5	25	3	3	174	140	226	M5x15	6203	6202
	0.55	0.55																					
80M	0.75	0.55	0.4	0.2	80	125	152	10	100	130	50	19	40	6	35	3.5	3	194	158	270.5	M6x15	6204	6203
	0.9																			289.5			
	1.1	0.75																		270.5			
90L	1.5	1.1	0.75	0.4	90	140	168	10	125	162	56	24	50	8	40	4	5	209	176	315.5	M8x20	6205	6204
	2.2	1.5																					
100L	3.0	2.2	-	0.75	100	160	199	12	140	178	63	28	60	8	50	4	5	240	198	363	M10x25	6206	6205
		-																					
112M	3.7	-	-	-	112	190	219	12	140	186	63	28	60	8	50	4	5	252	198	363	M10x25	6206	6205
	-	3.0	1.5	1.5			232			180	70							262	220	378			
		3.7																					
	-	-	2.2	-																406			6305
132S	5.5	-	-	-	132	216	258	12	140	192	89	38	80	10	70	5	5	282	220	403	M12x30	6208	6206
	7.5	5.5	3.7							194	89							310	259.4	445			
132M	-	7.5	5.5	-	132	216	258	12	178	222	89	38	80	10	70	5	5	310	259.4	464	M12x30	6208	6206
160M	11	11	7.5		160	254	304	15	210	304	108	42	110	12	100	5	5	403	315	561	M12x30	6309	6308
	15																						
160L	18.5	15	11		160	254	304	15	254	304	108	42	110	12	100	5	5	403	315	561	M12x30	6309	6308

* The specification is subject to change without notice in advance for the purpose of quality improvement.
* Please contact us for customized model.

IE3 Series

Vertical Type

B5 Premium Efficiency Three-Phase Induction Motor

Scale

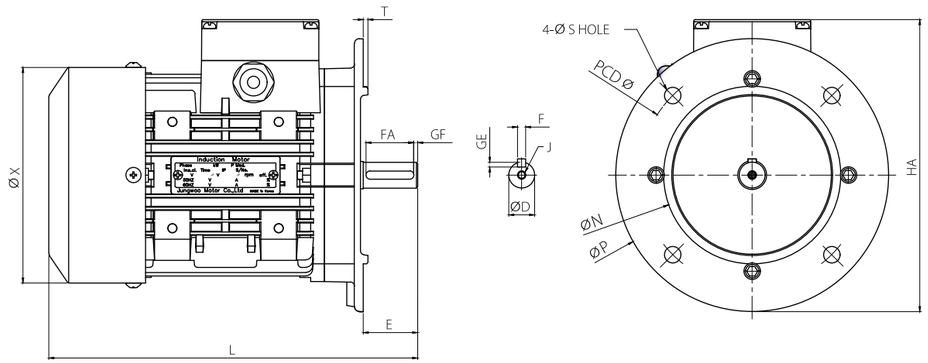

Specification

Flange No.	Frame No.	Output (kW)				Dimensions (mm)															Bearing	
		2P	4P	6P	8P	Hole PCD	Hole S	D	E	F	FA	GE	GF	HA	X	L	N	P	T	J	DE	ODE
FF115	63M	0.2	0.2	-	-	115	10	11	23	4	18	2.5	3	164	124	197	95	140	3	-	6202	6202
FF130	71M	0.4	0.4	0.2	-	130	10	14	30	5	25	3	3	183	140	226	110	160	3	M5x15	6203	6202
		0.55	0.55																			
FF165	80M	0.75	0.55	0.4	0.2	165	12	19	40	6	35	3.5	3	214	158	270.5	130	200	3.5	M6x15	6204	6203
		0.9														289.5						
		1.1	0.75													270.5						
	90L	1.5	1.1	0.75	0.4	165	12	24	50	8	40	4	5	219	176	315.5	130	200	3.5	M8x20	6205	6204
		2.2	1.5																			
FF215	100L	3.0	2.2	-	0.75	215	15	28	60	8	50	4	5	265	198	363	180	250	4	M10x25	6206	6205
		3.7	-																			
	112M	-	3.0	1.5	1.5	215	15	28	60	8	50	4	5	275	220	378	180	250	4	M10x25	6206	6205
			3.7																			
			-	2.2	-											406						6305
FF265	112M	5.5	-	-	-	265	15	38	80	10	70	5	5	300	220	403	230	300	4	M12x30	6208	6206
	132S	7.5	5.5	3.7	-	265	15	38	80	10	70	5	5	328	259.4	445	230	300	4	M12x30	6208	6206
	132M	-	7.5	5.5	-	265	15	38	80	10	70	5	5	328	259.4	464	230	300	4	M10x25	6208	6206
		11	-	-	-	300	19	42	110	12	100			353		510	250	350	5	M12x30	6310	6307
FF300	160M	11	11	7.5	-	300	19	42	110	12	100	5	5	421	315	561	250	350	5	M12x30	6309	6308
		15																				
	160L	18.5	15	11		300	19	42	110	12	100	5	5	421	315	561	250	350	5	M12x30	6309	6308

* The specification is subject to change without notice in advance for the purpose of quality improvement.
* Please contact us for customized model.

IE3
Series

Horizontal-Vertical Type

B35

Premium Efficiency Three-Phase Induction Motor

Scale

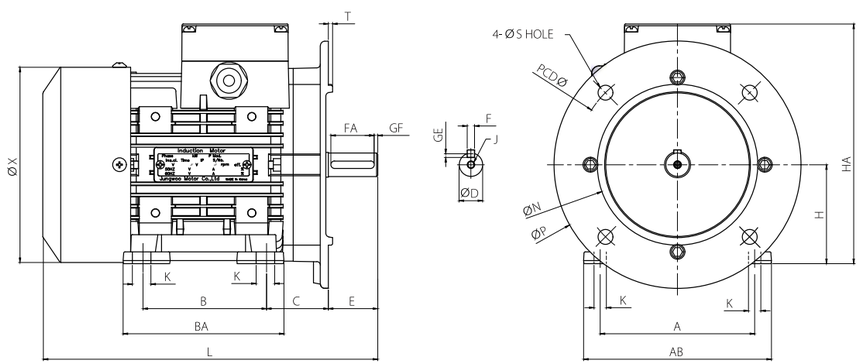

Specification

Flange No.	Frame No.	Output (kW) 2P	4P	6P	8P	Dimensions (mm) Hole PCD	Hole S	H	K	A	AB	B	BA	C	D	E	F	FA	GE	GF	HA	X	N	P	T	L	J	Bearing DE	ODE
FF115	63M	0.2	0.2	-	-	115	10	63	7	100	124	80	99	40	11	23	4	18	2.5	3	157	124	95	140	3	197	-	6202	6202
FF130	71M	0.4	0.4	0.2	-	130	10	71	7	112	132	90	118	45	14	30	5	25	3	3	174	140	110	160	3	226	M5x15	6203	6202
		0.55	0.55																										
FF165	80M	0.75	0.55	0.4	0.2	165	12	80	10	125	152	100	130	50	19	40	6	35	3.5	3	194	158	130	200	3.5	270.5	M6x15	6204	6203
		0.9																								289.5			
		1.1	0.75																							270.5			
	90L	1.5	1.1	0.75	0.4	165	12	90	10	140	168	125	162	56	24	50	8	40	4	5	209	176	130	200	3.5	315.5	M8x20	6205	6204
		2.2	1.5																										
FF215	100L	30	22	-	0.75	215	15	100	12	160	199	140	178	63	28	60	8	50	4	5	240	198	180	250	4	363	M10x25	6206	6206
			-																										
	112M	-	-	-	-	215	15	112	12	190	219	140	186	63	28	60	8	50	4	5	252	198	180	250	4	363	M10x25	6206	6205
			30	1.5	1.5						232		180	70							262	220				378			
			37																										
			-	2.2	-																					406			6305
FF265	132S	5.5	-	-	-	265	15	132	12	216	258	140	192	89	38	80	10	70	5	5	282	220	230	300	4	403	M12x30	6208	6206
		7.5	5.5	3.7									194	89							310	259.4				445			
	132M	-	7.5	5.5	-	265	15	132	12	216	258	178	222	89	38	80	10	70	5	5	310	259.4	230	300	4	464	M12x30	6208	6206
FF300	160M	11	11	7.5		300	19	160	15	254	304	210	304	108	42	110	12	100	5	5	403	315	250	350	5	561	M12x30	6309	6308
		15																											
	160L	18.5	15	11		300	19	160	15	254	304	254	304	108	42	110	12	100	5	5	403	315	250	350	5	561	M12x30	6309	6308

* The specification is subject to change without notice in advance for the purpose of quality improvement.
* Please contact us for customized model.

C-Face Type

B14

Premium Efficiency Three-Phase Induction Motor

IE3
Series

Scale

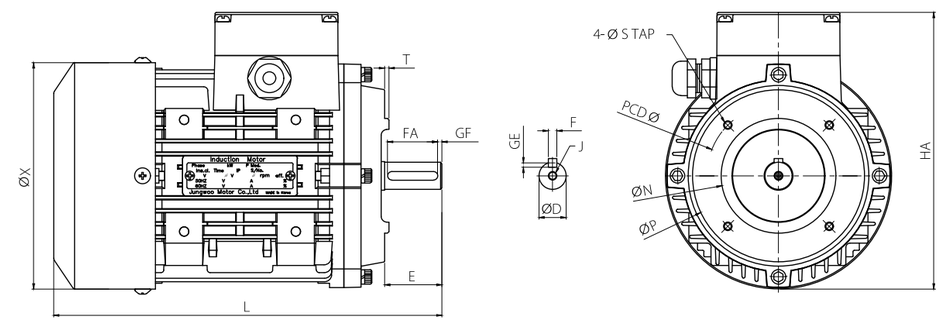

Specification

Flange No.	Frame No.	Output (kW) 2P	4P	6P	8P	Dimensions (mm) Hole PCD	Hole TAP	D	E	F	FA	GE	GF	HA	X	L	N	P	T	J	Bearing DE	ODE
FT75	63M	0.2	0.2	-	-	75	M5	11	23	4	18	2.5	3	155	124	197	60	90	2.5	-	6202	6202
FT85	71M	0.4	0.4	0.2	-	85	M6	14	30	5	25	3	3	173	140	226	70	105	2.5	M5x15	6203	6202
		0.55	0.55																			
FT100	80M	0.75	0.55	0.4	0.2	100	M6	19	40	6	35	3.5	3	193	158	270.5	80	120	3	M6x15	6204	6203
		0.9														289.5						
		1.1	0.75													270.5						
FT115	90L	1.5	1.1	0.75	0.4	115	M8	24	50	8	40	4	5	207	176	315.5	95	140	3.5	M8x20	6205	6204
		2.2	1.5																			
FT130	100L	30	22	-	0.75	130	M8	28	60	8	50	4	5	239	198	363	110	160	4	M10x25	6206	6205
		37	-																			
	112M	3.7	-	-	-	130	M8	28	60	8	50	4	5	260	220	378	110	160	3.5	M10x25	6206	6205
		-	30	1.5	1.5																	
			37																			
		-	-	2.2	-											406						6305
FT165	112M	5.5	-	-	-	165	M10	38	80	10	70	5	5	260.5	220	403	130	196	3.5	M12x30	6208	6206
	132S	7.5	5.5	3.7	-	165	M10	38	80	10	70	5	5	308	259.4	445	130	200	3.5	M12x30	6208	6206
	132M	-	7.5	5.5	-	165	M10	38	80	10	70	5	5	308	259.4	464	130	200	3.5	M12x30	6208	6206
FT215	160M	11	11	7.5		215	M12	42	110	12	100	5	5	403	315	561	180	250	5	M12x30	6309	6308
		15																				
FT265	160L	18.5	15	11		265	M12	42	110	12	100	5	5	403	315	561	230	250	5	M12x30	6309	6308

* The specification is subject to change without notice in advance for the purpose of quality improvement.
* Please contact us for customized model.

IE3 Series

Horizontal C-Face Type

B34

Premium Efficiency Three-Phase Induction Motor

Scale

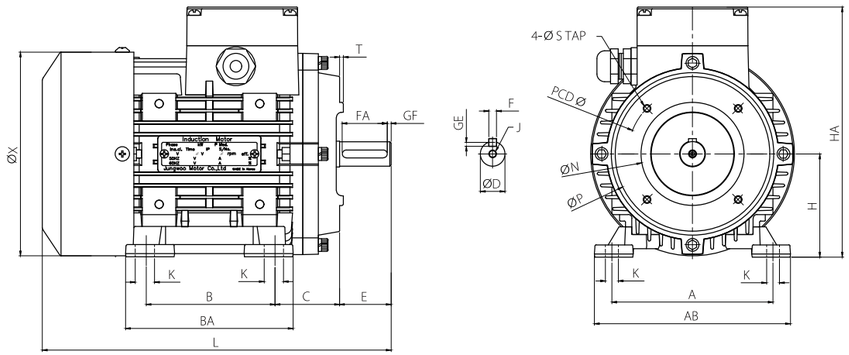

Specification

Flange No.	Frame No.	Output (kW) 2P	4P	6P	8P	Dimensions (mm) Hole PCD	Hole TAP	H	A	AB	K	B	BA	C	D	E	F	FA	GE	GF	HA	X	L	N	P	T	J	Bearing DE	ODE
FT75	63M	0.2	0.2	-	-	75	M5	63	100	124	7	80	99	40	11	23	4	18	2.5	3	157	124	197	60	90	2.5	-	6202	6202
FT85	71M	0.4	0.4	0.2	-	85	M6	71	112	132	7	90	118	45	14	30	5	25	3	3	174	140	226	70	105	2.5	M5x15	6203	6202
		0.55	0.55																										
FT100	80M	0.75	0.55	0.4	0.2	100	M6	80	125	152	10	100	130	50	19	40	6	35	3.5	3	194	158	270.5	80	120	3	M6x15	6204	6203
		0.9																					289.5						
		1.1	0.75																				270.5						
FT115	90L	1.5	1.1	0.75	0.4	115	M8	90	140	168	10	125	162	56	24	50	8	40	4	5	209	176	315.5	95	140	3.5	M8x20	6205	6204
		2.2	1.5																										
FT130	100L	3.0	2.2	-	0.75	130	M8	100	160	199	12	140	178	63	28	60	8	50	4	5	240	198	363	110	160	3.5	M10x25	6206	6205
			-																										
	112M	3.7	-	-	-	130	M8	112	190	219	12	140	186	63	28	60	8	50	4	5	252	198	363	110	160	3.5	M10x25	6206	6205
		-	3.0	1.5	1.5					232			180	70							262	220	378						
			3.7																										
		-	-	2.2	-																		406						6305
FT165	132S	5.5	-	3.7	-	165	M10	132	216	258	12	140	192	89	38	80	10	70	5	5	282	220	403	130	196	3.5	M12x30	6208	6206
		7.5	5.5										194	89							310	259.4	445		200				
	132M	-	7.5	5.5	-	165	M10	132	216	258	12	178	222	89	38	80	10	70	5	5	310	259.4	464	130	200	3.5	M12x30	6208	6206
FT215	160M	11	11	7.5		215	M12	160	254	304	15	210	304	108	42	110	12	100	5	5	403	315	561	180	250	5	M12x30	6309	6308
		15																											
FT265	160L	18.5	15	11		265	M12	160	254	304	15	254	304	108	42	110	12	100	5	5	403	315	561	230	250	5	M12x30	6309	6308

* The specification is subject to change without notice in advance for the purpose of quality improvement.
* Please contact us for customized model.

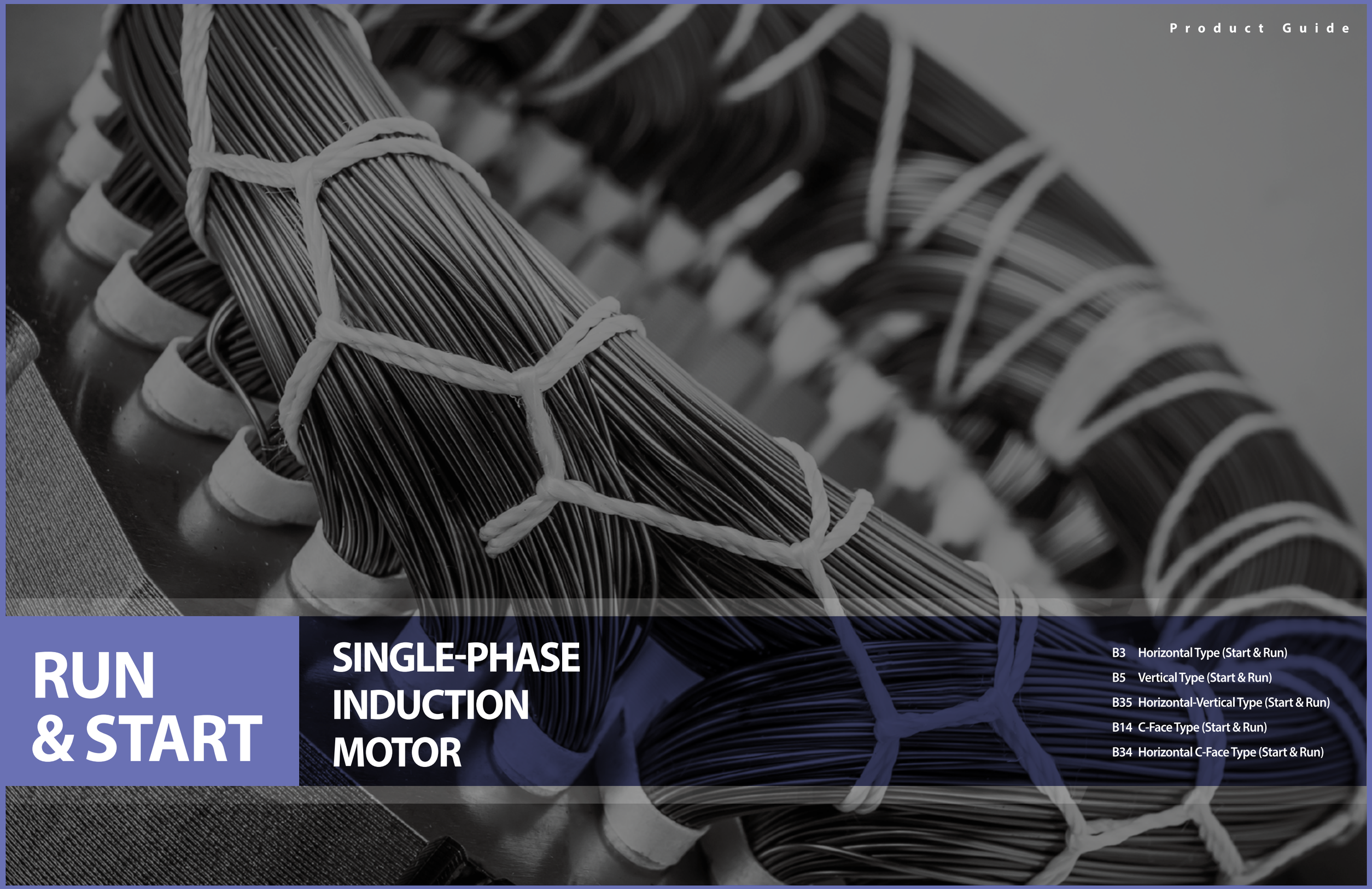

RUN & START

SINGLE-PHASE INDUCTION MOTOR

B3 Horizontal Type (Start & Run)
B5 Vertical Type (Start & Run)
B35 Horizontal-Vertical Type (Start & Run)
B14 C-Face Type (Start & Run)
B34 Horizontal C-Face Type (Start & Run)

RUN & START

Horizontal Type

B3 Single-Phase Induction Motor

Scale

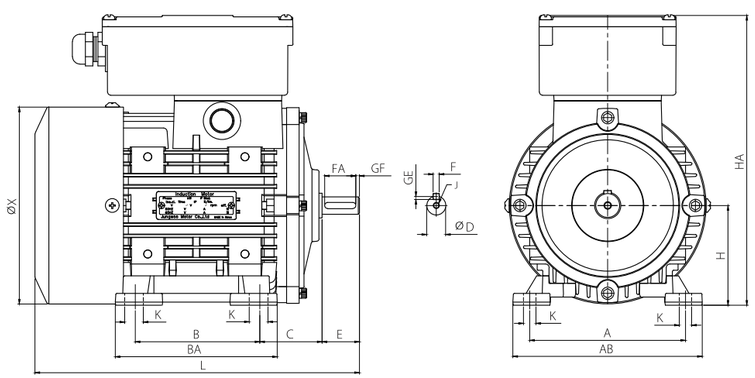

Specification

Frame No.	Output (kW)		Dimensions (mm)																	Bearing	
	2P	4P	H	A	AB	K	B	BA	C	D	E	F	FA	GE	GF	HA	X	L	J	DE	ODE
71M	0.4	0.2	71	112	132	7	90	118	45	14	30	5	25	3	3	213	140	226	M5*15	6203	6202
	0.55	0.3																			
80M	-	0.4	80	125	152	10	100	130	50	14	30	5	25	3	3	232.5	158	260.5	M6*15	6204	6203
	-	0.55																			
	0.75	-	80	125	152	10	100	130	50	19	40	6	35	3.5	3	232.5	158	270.5	M6*15	6204	6203
	0.9	-																			
	1.1	-																			
90L	-	0.75	90	140	168	10	125	162	56	19	40	6	35	3.5	3	247.5	176	305.5	M6*15	6204	6203
	-	0.9																			
	-	1.1																			
	1.5	-	90	140	168	10	125	162	56	24	50	8	40	4	5	247.5	176	315.5	M8*20	6205	6204
	-	1.5																			
	2.2	-																			
100L	-	2.2	100	160	199	12	140	178	63	28	60	8	50	4	5	286.5	198	363	M10*20	6206	6205

* The specification is subject to change without notice in advance for the purpose of quality improvement.
* Please contact us for customized model.

RUN & START

Vertical Type

B5 Single-Phase Induction Motor

Scale

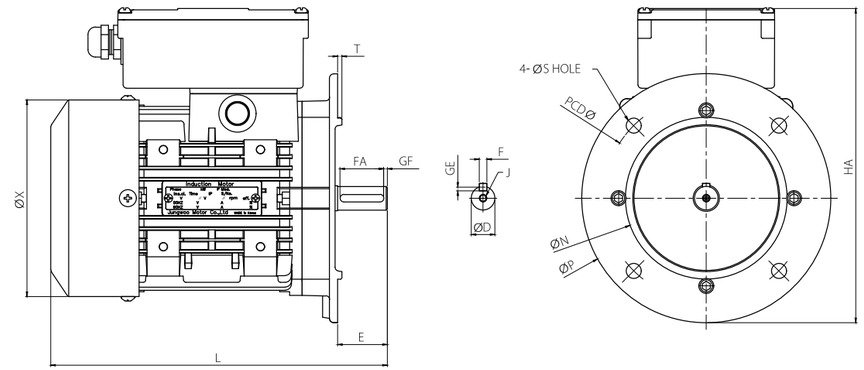

Specification

Flange No.	Frame No.	Output (kW)		Dimensions (mm)																Bearing	
		2P	4P	Hole		D	E	F	FA	GE	GF	HA	X	L	N	P	T	J	DE	ODE
				PCD	S															
FF130	71M	0.4	0.2	130	10	14	30	5	25	3	3	221.5	140	226	110	160	3	M5*15	6203	6202
		0.55	0.3																	
	80M	-	0.4	130	10	14	30	5	25	3	3	232.5	158	276	110	160	3	M6*15	6204	6203
		-	0.55																	
FF165	80M	0.75	-	165	12	19	40	6	35	3.5	3	252.5	158	270.5	130	200	3.5	M6*15	6204	6203
		0.9	-																	
		1.1	-																	
	90L	-	0.75	165	12	19	40	6	35	3.5	3	257.5	176	305.5	130	200	3.5	M6*15	6205	6204
		-	0.9																	
		-	1.1																	
		1.5		165	12	24	50	8	40	4	5	257.5	176	315.5	130	200	3.5	M8*20	6205	6204
			1.5																	
		2.2	-																	
FF215	100L		2.2	215	15	28	60	8	50	4	5	311.5	198	363	180	250	4	M10*25	6206	6205

* The specification is subject to change without notice in advance for the purpose of quality improvement.
* Please contact us for customized model.

RUN
& START

Horizontal-Vertical Type

B35 Single-Phase Induction Motor

Scale

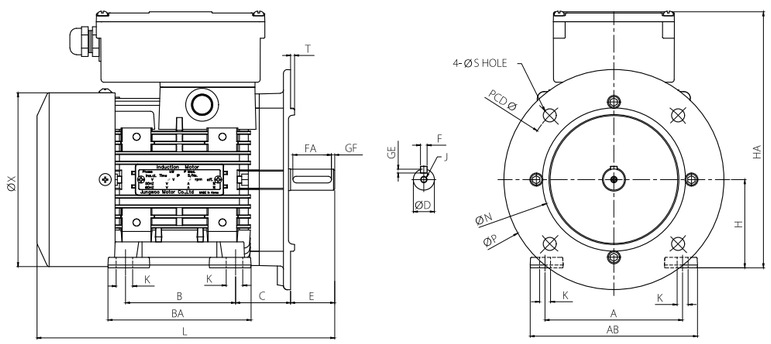

Specification

Flange No.	Frame No.	Output (kW) 2P	Output (kW) 4P	Dimensions (mm) Hole PCD	Hole S	H	K	A	AB	B	BA	C	D	E	F	FA	GE	GF	HA	X	L	N	P	T	J	Bearing DE	Bearing ODE
FF130	71M	0.4	0.2	130	10	71	7	112	132	90	118	45	14	30	5	25	3	3	213	140	226	110	160	3	M5*15	6203	6202
		0.55	0.3																								
	80M	-	0.4	130	10	80	10	125	152	100	130	65	14	30	5	25	3	3	232.5	158	276	110	160	3	M6*15	6204	6203
		-	0.55																								
FF165	80M	0.75	-	165	12	80	10	125	152	100	130	50	19	40	6	35	3.5	3	232.5	158	270.5	130	200	3.5	M6*15	6204	6203
		0.9	-																								
		1.1	-																								
	90L	-	0.75	165	12	90	10	140	168	125	162	56	19	40	6	30	3.5	3	247.5	176	305.5	130	200	3.5	M6*15	6205	6204
		-	0.9																								
		-	1.1																								
		1.5	-	165	12	90	10	140	168	125	162	56	24	50	8	40	4	5	247.5	176	315.5	130	200	3.5	M8*20	6205	6204
		-	1.5																								
		2.2	-																								
FF215	100L	-	2.2	215	15	100	12	160	199	140	178	63	28	60	8	50	4	5	286.5	198	363	180	250	4	M10*25	6206	6205

* The specification is subject to change without notice in advance for the purpose of quality improvement.
* Please contact us for customized model.

RUN
& START

C-Face Type

B14 Single-Phase Induction Motor

Scale

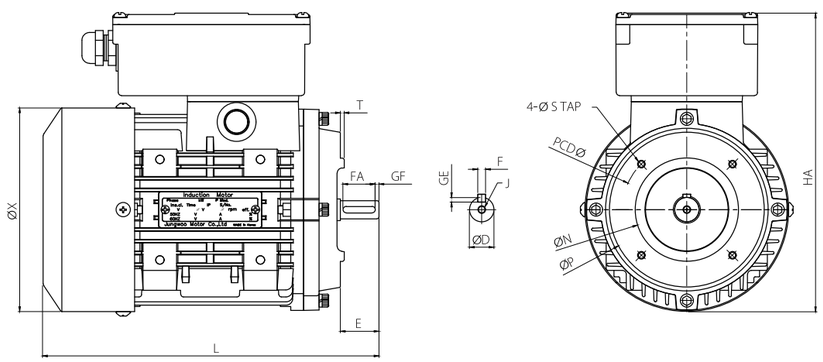

Specification

Flange No.	Frame No.	Output (kW) 2P	Output (kW) 4P	Dimensions (mm) Hole PCD	Hole TAP	D	E	F	FA	GE	GF	HA	X	L	N	P	T	J	Bearing DE	Bearing ODE
FT85	71M	0.4	0.2	85	M6	14	30	5	25	3	3	211.5	140	226	70	105	2.5	M5*15	6203	6202
		0.55	0.3																	
	80M	-	0.4	85	M6	14	30	5	25	3	3	231.5	158	260.5	70	120	3	M6*15	6204	6203
		-	0.55																	
FT100	80M	0.75	-	100	M6	19	40	6	35	3.5	3	231.5	158	270.5	80	120	3	M6*15	6204	6203
		0.9	-																	
		1.1	-																	
	90L	-	0.75	100	M6	19	40	6	35	3.5	3	245.5	176	305.5	80	140	3.5	M6*15	6205	6204
		-	0.9																	
		-	1.1																	
FT115	90L	1.5	-	115	M8	24	50	8	40	4	5	245.5	176	315.5	95	140	3.5	M8*20	6205	6204
		-	1.5																	
		2.2	-																	
FT130	100L	-	2.2	130	M8	28	60	8	50	4	5	286	198	363	110	160	3.5	M10*25	6206	6205

* The specification is subject to change without notice in advance for the purpose of quality improvement.
* Please contact us for customized model.

RUN
& START

Horizontal C-Face Type

B34 Single-Phase Induction Motor

Scale

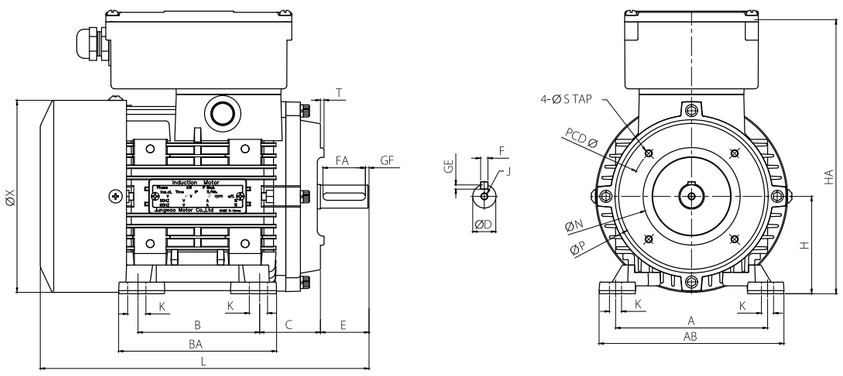

Specification

Flange No.	Frame No.	Output (kW)		Dimensions (mm)																						Bearing	
		2P	4P	Hole		H	A	AB	K	B	BA	C	D	E	F	FA	GE	GF	HA	X	L	N	P	T	J	DE	ODE
				PCD	TAP																						
FT85	71M	0.4	0.2	85	M6	71	112	131	7	90	118	45	14	30	5	25	3	3	213	140	226	70	105	2.5	M5*15	6203	6202
		0.55	0.3																								
	80M	-	0.4	85	M6	80	125	152	10	100	130	50	14	30	5	25	3	3	232.5	158	260.5	70	120	3	M6*15	6204	6203
		-	0.55																								
FT100	80M	0.75	-	100	M6	80	125	152	10	100	130	50	19	40	6	35	3.5	3	232.5	158	270.5	80	120	3	M6*15	6204	6203
		0.9	-																								
		1.1	-																								
	90L	-	0.75	100	M6	90	140	168	10	125	162	56	19	40	6	35	3.5	3	247.5	176	305.5	80	140	3.5	M6*15	6205	6204
		-	0.9																								
		-	1.1																								
FT115	90L	1.5	-	115	M8	90	140	168	10	125	162	56	24	50	8	40	4	5	247.5	176	315.5	95	140	3.5	M8*20	6205	6204
		-	1.5																								
		2.2	-																								
FT130	100L	-	2.2	130	M8	100	160	199	12	140	178	63	28	60	8	50	4	5	286.5	198	363	110	160	3.5	M10*25	6206	6205

* The specification is subject to change without notice in advance for the purpose of quality improvement.
* Please contact us for customized model.

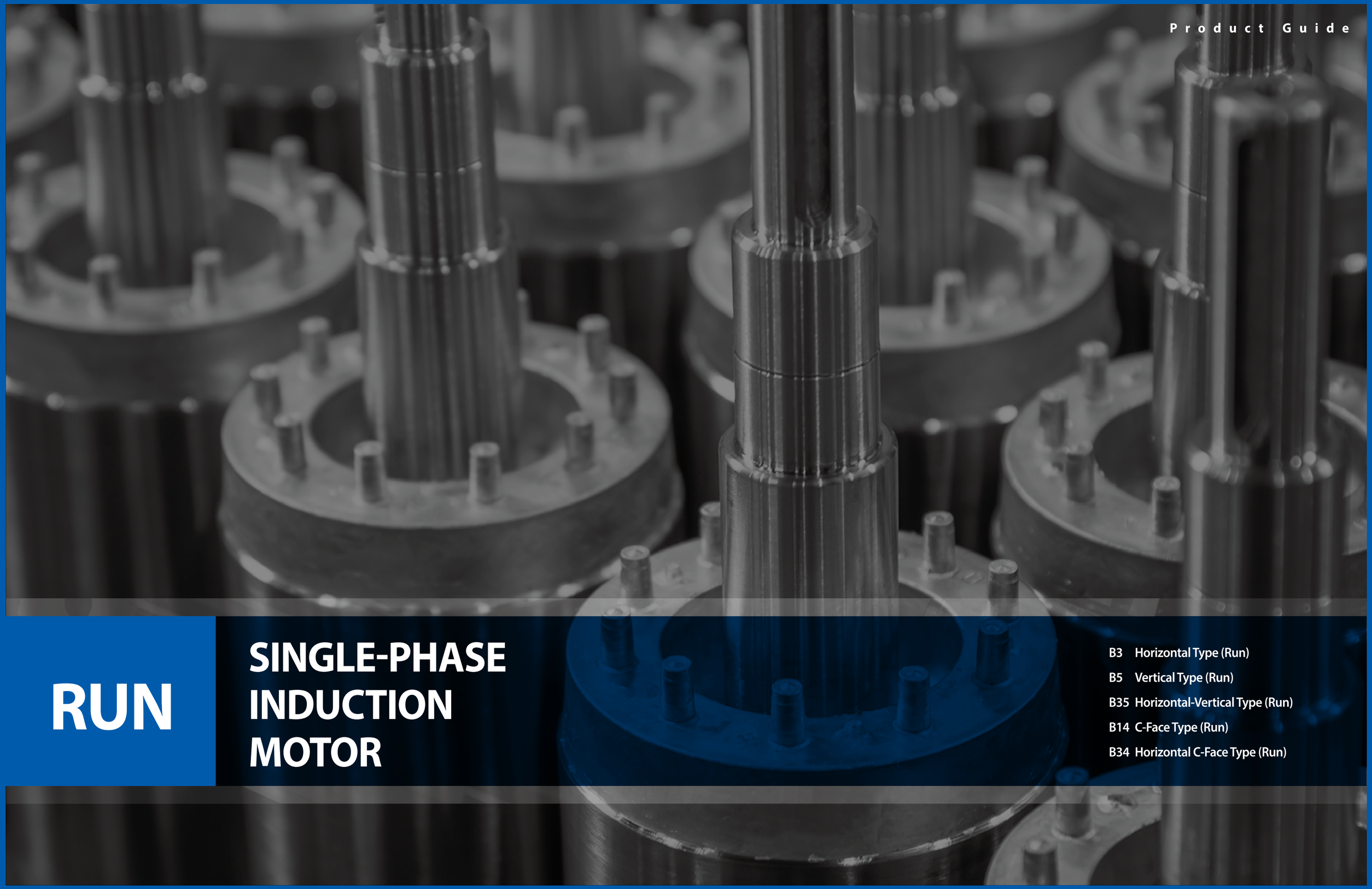

RUN

SINGLE-PHASE INDUCTION MOTOR

B3 Horizontal Type (Run)
B5 Vertical Type (Run)
B35 Horizontal-Vertical Type (Run)
B14 C-Face Type (Run)
B34 Horizontal C-Face Type (Run)

RUN

Horizontal Type

B3 Single-Phase Induction Motor

Scale

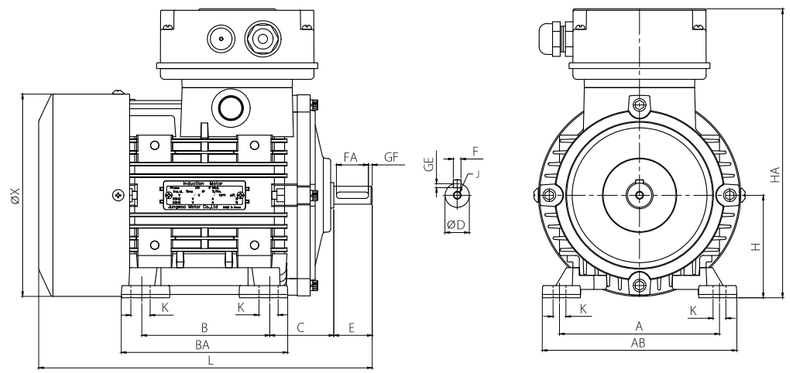

Specification

Frame No.	Output (kW)		Dimensions (mm)																	Bearing	
	2P	4P	H	A	AB	K	B	BA	C	D	E	F	FA	GE	GF	HA	X	L	J	DE	ODE
71M	0.4	0.2	71	112	132	7	90	118	45	14	30	5	25	3	3	204	140	226	M5*15	6203	6202
	0.55	0.3																			
80M	-	0.4	80	125	152	10	100	130	50	14	30	5	25	3	3	224	158	260.5	M6*15	6204	6203
	-	0.55																			
	0.75	-	80	125	152	10	100	130	50	19	40	6	35	3.5	3	224	158	270.5	M6*15	6204	6203
	0.9	-																			
	1.1	-																			
90L	-	0.75	90	140	168	10	125	162	56	19	40	6	35	3.5	3	239	176	305.5	M6*15	6205	6204
	-	0.9																			
	-	1.1																			
	1.5	-	90	140	168	10	125	162	56	24	50	8	40	4	5	239	176	315.5	M8*20	6205	6204
	-	1.5																			
	2.2	-																			

* The specification is subject to change without notice in advance for the purpose of quality improvement.
* Please contact us for customized model.

RUN

Vertical Type

B5 Single-Phase Induction Motor

Scale

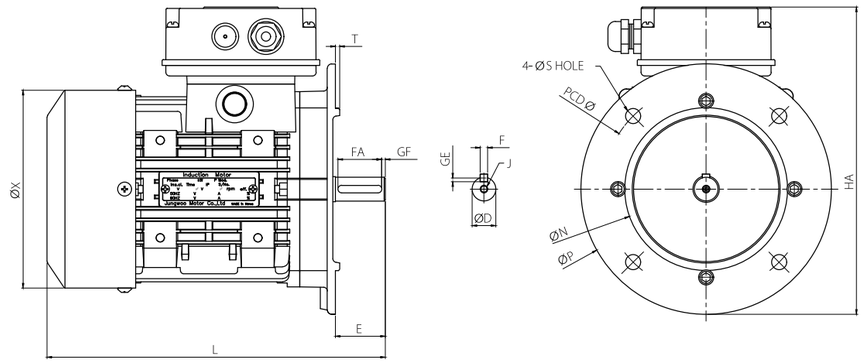

Specification

Flange No.	Frame No.	Output (kW)		Dimensions (mm)															Bearing	
		2P	4P	Hole		D	E	F	FA	GE	GF	HA	X	L	N	P	T	J	DE	ODE
				PCD	S															
FF130	71M	0.4	0.2	130	10	14	30	5	25	3	3	215	140	226	110	160	3	M5*15	6203	6202
		0.55	0.3																	
	80M	-	0.4	130	10	14	30	5	25	3	3	226	158	276	110	160	3	M6*15	6204	6203
		-	0.55																	
FF165	80M	0.75	-	165	12	19	40	6	35	3.5	3	246	158	270.5	130	200	3.5	M6*15	6204	6203
		0.9	-																	
		1.1	-																	
	90L	-	0.75	165	12	19	40	6	35	3.5	3	249	176	305.5	130	200	3.5	M6*15	6205	6204
		-	0.9																	
		-	1.1																	
		1.5	-	165	12	24	50	8	40	4	5	249	176	315.5	130	200	3.5	M8*20	6205	6204
		-	1.5																	
		2.2	-																	

* The specification is subject to change without notice in advance for the purpose of quality improvement.
* Please contact us for customized model.

RUN

Horizontal-Vertical Type

B35 Single-Phase Induction Motor

Scale

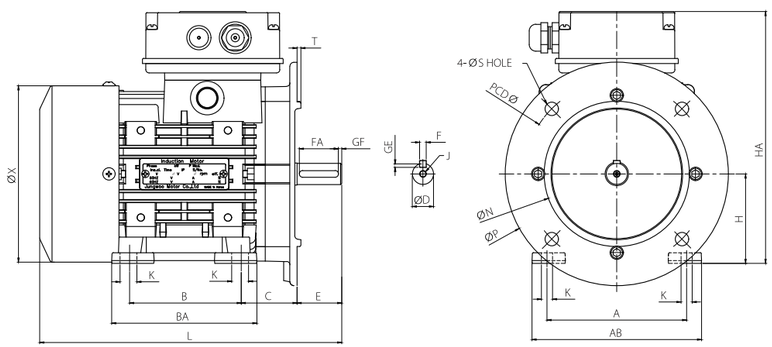

Specification

Flange No.	Frame No.	Output (kW) 2P	Output (kW) 4P	Dimensions (mm) Hole PCD	Hole S	H	K	A	AB	B	BA	C	D	E	F	FA	GE	GF	HA	X	L	N	P	T	J	Bearing DE	Bearing ODE
FF130	71M	0.4	0.2	130	10	71	7	112	132	90	118	45	14	30	5	25	3	3	204	140	226	110	160	3	M5*15	6203	6202
		0.55	0.3																								
	80M	-	0.4	130	10	80	10	125	152	100	130	65	14	30	5	25	3	3	224	158	276	110	160	3	M6*15	6204	6203
		-	0.55																								
FF165	80M	0.75	-	165	12	80	10	125	152	100	130	50	19	40	6	35	3.5	3	226	158	270.5	130	200	3.5	M6*15	6204	6203
		0.9	-																								
		1.1	-																								
	90L	-	0.75	165	12	90	10	140	168	125	162	56	19	40	6	35	3.5	3	239	176	305.5	130	200	3.5	M6*15	6205	6204
		-	0.9																								
		-	1.1																								
	90L	1.5	-	165	12	90	10	140	168	125	162	56	24	50	8	40	4	5	239	176	315.5	130	200	3.5	M8*20	6205	6204
		-	1.5																								
		2.2	-																								

* The specification is subject to change without notice in advance for the purpose of quality improvement.
* Please contact us for customized model.

RUN

C-Face Type

B14 Single-Phase Induction Motor

Scale

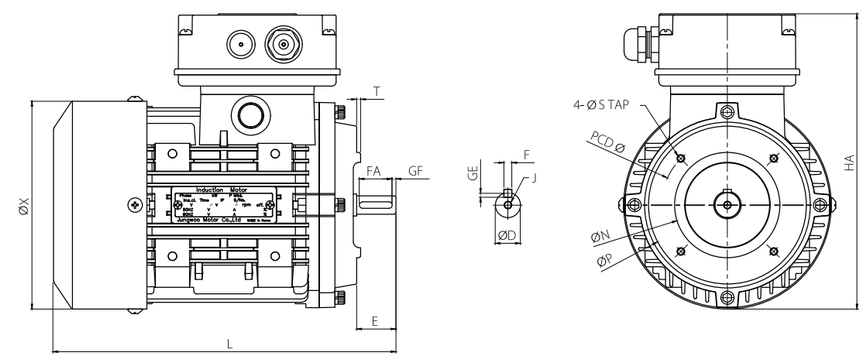

Specification

Flange No.	Frame No.	Output (kW) 2P	Output (kW) 4P	Dimensions (mm) Hole PCD	Hole TAP	D	E	F	FA	GE	GF	HA	X	L	N	P	T	J	Bearing DE	Bearing ODE
FT85	71M	0.4	0.2	85	M6	14	30	5	25	3	3	203	140	226	70	105	2.5	M5*15	6203	6202
		0.55	0.3																	
	80M	-	0.4	85	M6	14	30	5	25	3	3	223	158	260.5	70	120	3	M6*15	6204	6203
		-	0.55																	
FT100	80M	0.75	-	100	M6	19	40	6	35	3.5	3	223	158	270.5	80	120	3	M6*15	6204	6203
		0.9	-																	
		1.1	-																	
	90L	-	0.75	100	M6	19	40	6	35	3.5	3	237	176	305.5	80	140	3.5	M6*15	6205	6204
		-	0.9																	
		-	1.1																	
FT115	90L	1.5	-	115	M8	24	50	8	40	4	5	237	176	315.5	95	140	3.5	M8*20	6205	6204
		-	1.5																	
		2.2	-																	

* The specification is subject to change without notice in advance for the purpose of quality improvement.
* Please contact us for customized model.

RUN

Horizontal C-Face Type

B34 Single-Phase Induction Motor

Scale

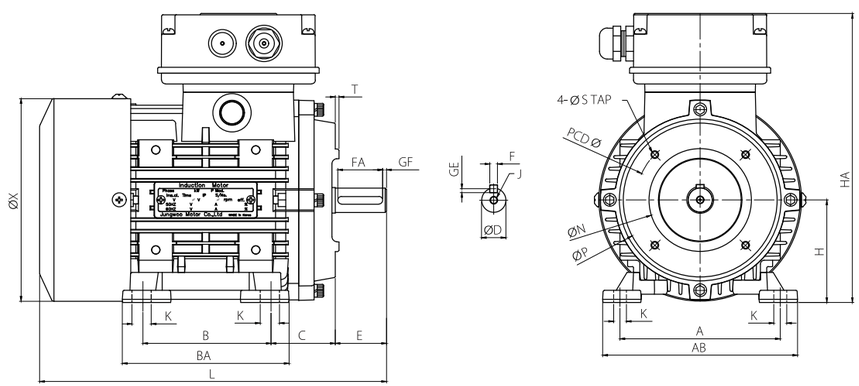

Specification

Flange No.	Frame No.	Output (kW) 2P	Output (kW) 4P	Dimensions (mm) Hole PCD	Hole TAP	H	A	AB	K	B	BA	C	D	E	F	FA	GE	GF	HA	X	L	N	P	T	J	Bearing DE	Bearing ODE
FT85	71M	0.4	0.2	85	M6	71	112	132	7	90	118	45	14	30	5	25	3	3	204	140	226	70	105	2.5	M5*15	6203	6202
		0.55	0.3																								
	80M	-	0.4	85	M6	80	125	152	10	100	130	50	14	30	5	25	3	3	224	158	260.5	70	120	3	M6*15	6204	6203
		-	0.55																								
FT100	80M	0.75	-	100	M6	80	125	152	10	100	130	50	19	40	6	35	3.5	3	224	158	270.5	80	120	3	M6*15	6204	6203
		0.9	-																								
		1.1	-																								
	90L	-	0.75	100	M6	90	140	168	10	125	162	56	19	40	6	35	3.5	3	239	176	305.5	80	140	3.5	M6*15	6205	6204
		-	0.9																								
		-	1.1																								
FT115	90L	1.5	-	115	M8	90	140	168	10	125	162	56	24	50	8	40	4	5	239	176	315.5	95	140	3.5	M8*20	6205	6204
		-	1.5																								
		2.2	-																								

* The specification is subject to change without notice in advance for the purpose of quality improvement.
* Please contact us for customized model.

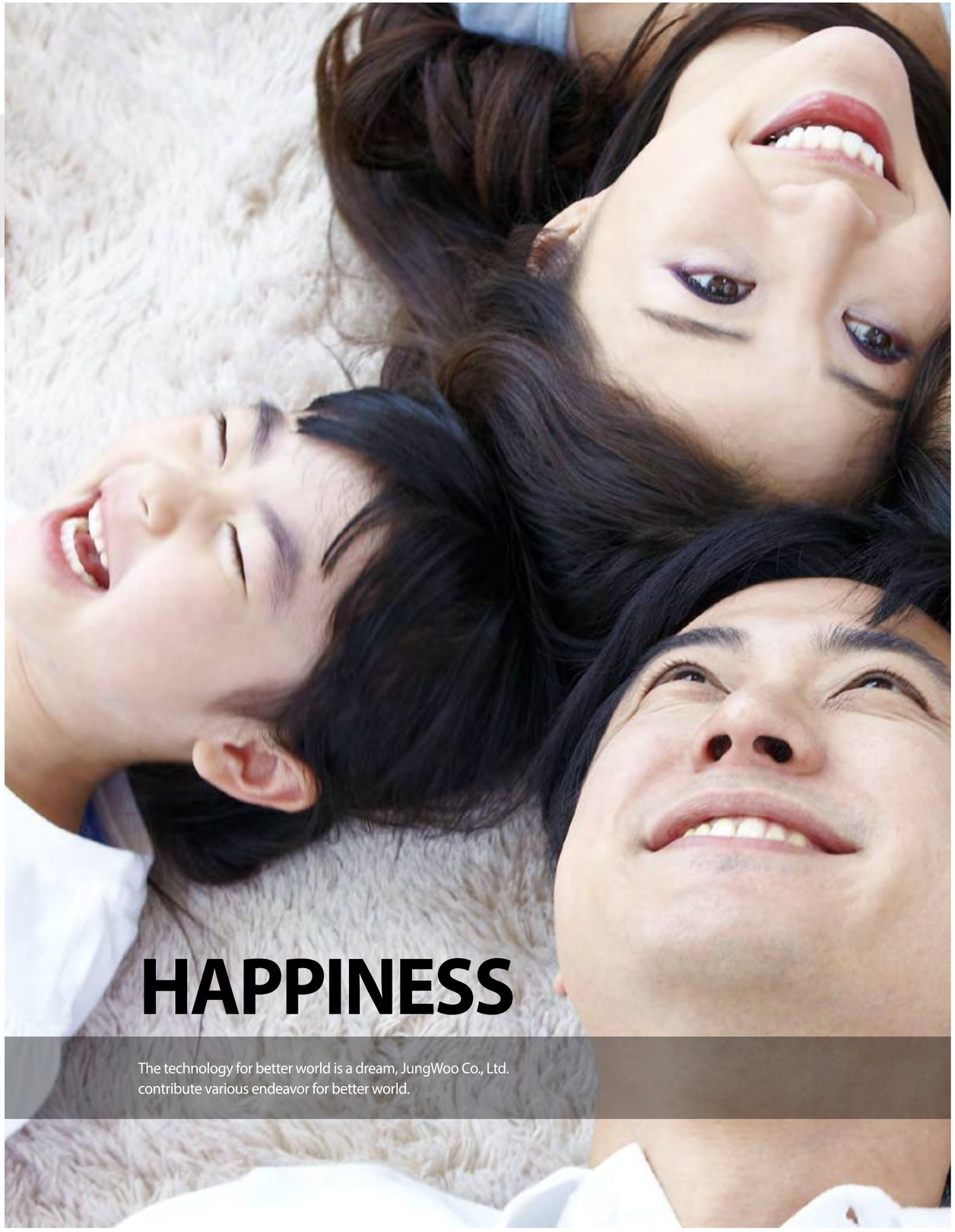

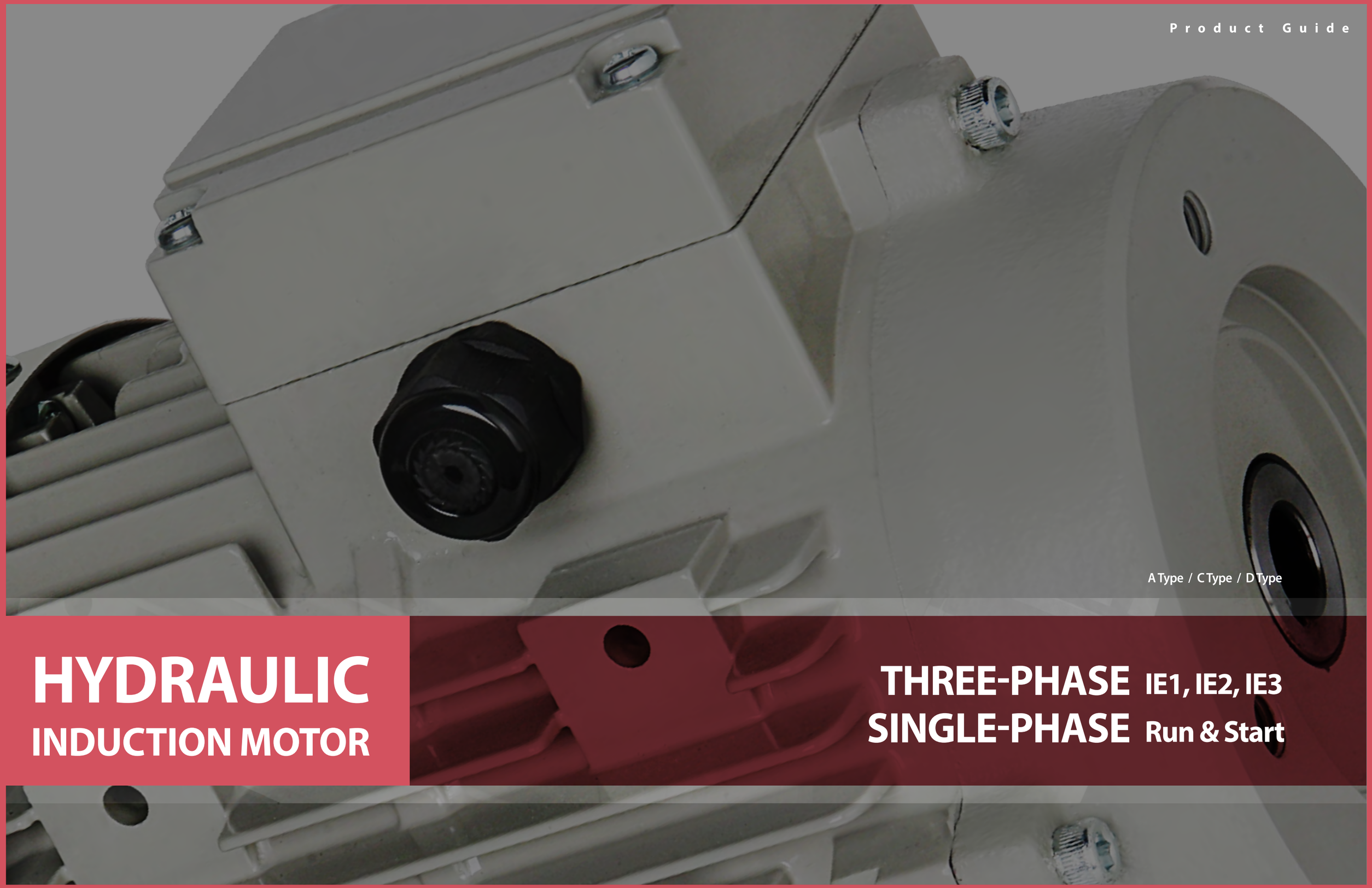

Product Guide

A Type / C Type / D Type

HYDRAULIC INDUCTION MOTOR

THREE-PHASE IE1, IE2, IE3
SINGLE-PHASE Run & Start

HYDRAULIC

Hydraulic
Three-Phase Induction Motor
IE1, IE2, IE3

A Type

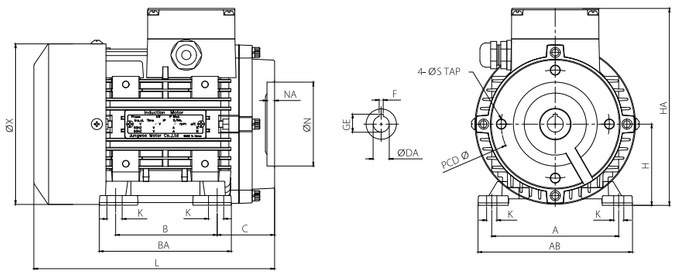

C Type

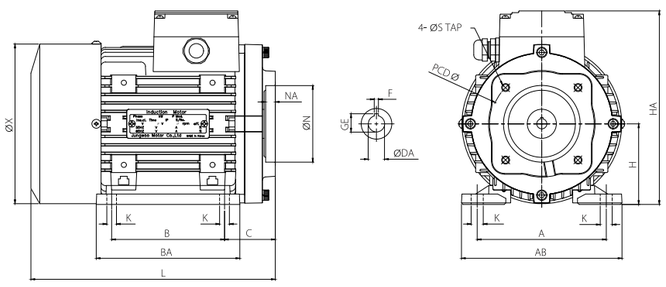

D Type

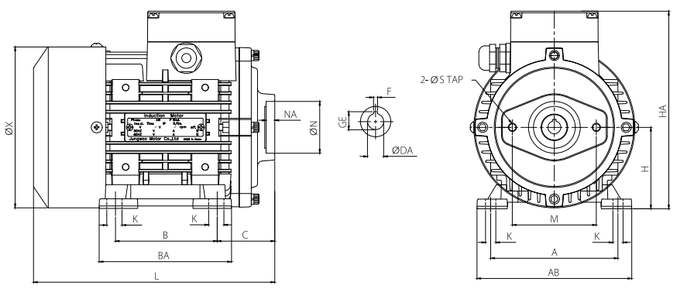

Specification

Flange No.	Frame No.		Output (kW)	Dimensions (mm)																				Bearing	
			4P	TYPE	FLANGE		TAP		SHAFT				A	AB	B	BA	K	H	C	HA	L	X		DE	ODE
					N	NA	PCD	S	DA	GE	F	DP													
80M	1	2T407G1A0	0.75	G1-A	50.8	8.5	82.55	M8	12.7	14.3	3.18	40	125	152	100	130	10	80	56.5	194	237	158		6205	6303
	2	2T407G1D0	0.75	G1-D	50.8	8.5	82.55	M8	12.7	14.3	3.18	40	125	152	100	130	10	80	56.5	194	237	158		6205	6303
	3	2T407G2A2	0.75	G2-A	82.55	7.5	106.4	M10	12.7	14.3	3.18	40	125	152	100	130	10	80	56.5	194	237	158		6006	6303
	4	2T407G2A0							15.88	17.7	4														
	5	2T407G2A1							19.05	21.4	4.76														
	6	2T407G2AS	0.75	G2-AS	70	7	98	M8	16	18.7	5	40	125	152	100	130	10	80	56.5	194	237	158		6206	6303
	7	2T407G2D2	0.75	G2-D	82.55	7.5	106.4	M10	12.7	14.3	3.18	40	125	152	100	130	10	80	56.5	194	237	158		6006	6303
	8	2T407G2D0							15.88	17.7	4														
	9	2T407G2D1							19.05	21.4	4.76														
90L	10	2T415G1A0	1.5	G1-A	50.8	8.5	82.55	M8	12.7	14.3	3.18	44	140	168	125	162	10	90	55	209	265.5	176		6206	6204
	11	2T415G1D0	1.5	G1-D	50.8	8.5	82.55	M8	12.7	14.3	3.18	44	140	168	125	162	10	90	55	209	265.5	176		6206	6204
	12	2T415G2A2	1.5	G2-A	82.55	7.5	106.4	M10	12.7	14.3	3.18	44	140	168	125	162	10	90	55	209	265.5	176		6206	6204
	13	2T415G2A0							15.88	17.7	4														
	14	2T415G2A1							19.05	21.4	4.76														
	15	2T415G2C0	1.5	G2-C	95.05	7	127	M10 M12	19.05	21.4	4.76	44	140	168	125	162	10	90	55	209	265.5	176		6206	6204
	16	2T415G2D2	1.5	G2-D	82.55	7.5	106.4	M10	12.7	14.3	3.18	44	140	168	125	162	10	90	55	209	265.5	176		6206	6204
	17	2T415G2D0							15.88	17.7	4														
	18	2T415G2D1							19.05	21.4	4.76														
100L	19	2T422G1A0	2.2	G1-A	50.8	8.5	82.55	M8	12.7	14.3	3.18	44	160	199	140	178	12	100	63	240	303	198		6206	6305
	20	2T422G1D0	2.2	G1-D	50.8	8.5	82.55	M8	12.7	14.3	3.18	44	160	199	140	178	12	100	63	240	303	198		6206	6305
	21	2T422G2A2	2.2	G2-A	82.55	12	106.4	M10	12.7	14.3	3.18	44	160	199	140	178	12	100	63	240	303	198		6207	6305
	22	2T422G2A0							15.88	17.7	4														
	23	2T422G2A1							19.05	21.4	4.76														
	24	2T422G2C2	2.2	G2-C	95.05	12	127	M10	12.7	14.3	3.18	44	160	199	140	178	12	100	63	240	303	198		6207	6305
	25	2T422G2C0							15.88	17.7	4														
	26	2T422G2C1							19.05	21.4	4.76														
	27	2T422G2D2	2.2	G2-D	82.55	12	106.4	M10	12.7	14.3	3.18	44	160	199	140	178	12	100	63	240	303	198		6207	6305
	28	2T422G2D0							15.88	17.7	4														
	29	2T422G2D1							19.05	21.4	4.76														
112M	30	2T437G2A2	3.7	G2-A	82.55	8	106.4	M10	12.7	14.3	3.18	44	190	232	140	180	12	112	73	262	321	220		6207	6305
	31	2T437G2A0							15.88	17.7	4														
	32	2T437G2A1							19.05	21.4	4.76														
	33	2T437G2C2	3.7	G2-C	95.05	10	127	M10	12.7	14.3	3.18	44	190	232	140	180	12	112	73	262	321	220		6207	6305
	34	2T437G2C0							15.88	17.7	4														
	35	2T437G2C1							19.05	21.4	4.76														
	36	2T437G2D2	3.7	G2-D	82.55	8	106.4	M10	12.7	14.3	3.18	44	190	232	140	180	12	112	73	262	321	220		6207	6305
	37	2T437G2D0							15.88	17.7	4														
	38	2T437G2D1							19.05	21.4	4.76														
	39	2T437G3A0	3.7	G3-A	101.6	10.5	146	M12	22.22	25.1	6.35	51	190	232	140	180	12	112	73	262	321	220		6207	6305
132S	40	2T455G2A0	5.5	G2-A	82.55	10.5	106.4	M10	15.88	17.7	4	44	216	258	140	194	12	132	102	310	378	259.4		6209	6208
	41	2T455G3A0	5.5	G3-A	101.6	10.5	146	M12	22.22	25.1	6.35	51	216	258	140	194	12	132	102	310	378	259.4		6209	6208
132M	42	2T475G2A0	7.5	G2-A	82.55	10.5	106.4	M10	15.88	17.7	4	44	216	258	178	222	12	132	83	310	392	259.4		6209	6208
	43	2T475G3A0	7.5	G3-A	101.6	10.5	146	M12	22.22	25.1	6.35	51	216	258	178	222	12	132	83	310	392	259.4		6209	6208

* The specification is subject to change without notice in advance for the purpose of quality improvement.
* Please contact us for customized model.

HYDRAULIC

Hydraulic Single-Phase Induction Motor (Run & Start)

A Type

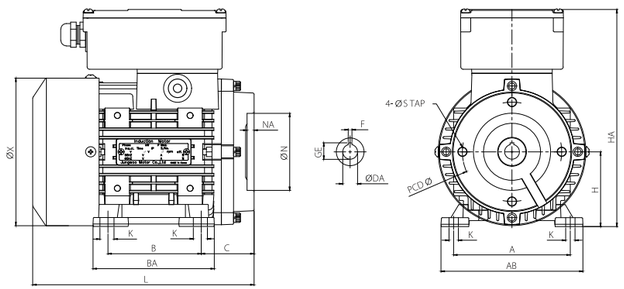

C Type

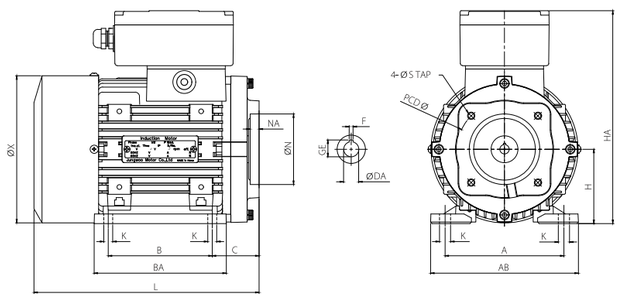

D Type

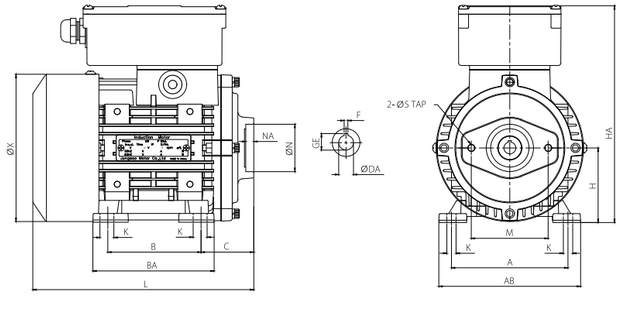

HYDRAULIC

Specification

Flange No.	Frame No.	Output (kW)	Dimensions (mm)																			Bearing	
		4P	TYPE	FLANGE		TAP		SHAFT				A	AB	B	BA	K	H	C	HA	L	X	DE	ODE
				N	NA	PCD	S	DA	GE	F	DP												
90L	S4075G1A0	0.75	G1-A	50.8	8.5	82.55	M8	12.7	14.3	3.18	44	140	168	125	162	10	90	55	247.5	265.5	176	6206	6204
	S4075G1D0	0.75	G1-D	50.8	8.5	82.55	M8	12.7	14.3	3.18	44	140	168	125	162	10	90	55	247.5	265.5	176	6206	6204
	S4075G2A2	0.75	G2-A	82.55	7.5	106.4	M10	12.7	14.3	3.18	44	140	168	125	162	10	90	55	247.5	265.5	176	6206	6204
	S4075G2A0							15.88	17.7	4													
	S4075G2A1							19.05	21.4	4.76													
	S4075G2D2	0.75	G2-D	82.55	7.5	106.4	M10	12.7	14.3	3.18	44	140	168	125	162	10	90	55	247.5	265.5	176	6206	6204
	S4075G2D0							15.88	17.7	4													
	S4075G2D1							19.05	21.4	4.76													
90L	S4150G1A0	1.5	G1-A	50.8	8.5	82.55	M8	12.7	14.3	3.18	44	140	168	125	162	10	90	55	247.5	265.5	176	6206	6204
	S4150G1D0	1.5	G1-D	50.8	8.5	82.55	M8	12.7	14.3	3.18	44	140	168	125	162	10	90	55	247.5	265.5	176	6206	6204
	S4150G2A2	1.5	G2-A	82.55	7.5	106.4	M10	12.7	14.3	3.18	44	140	168	125	162	10	90	55	247.5	265.5	176	6206	6204
	S4150G2A0							15.88	17.7	4													
	S4150G2A1							19.05	21.4	4.76													
	S4150G2D2	1.5	G2-D	82.55	7.5	106.4	M10	12.7	14.3	3.18	44	140	168	125	162	10	90	55	247.5	265.5	176	6206	6204
	S4150G2D0							15.88	17.7	4													
	S4150G2D1							19.05	21.4	4.76													
100L	S4220G1A0	2.2	G1-A	50.8	8.5	82.55	M8	12.7	14.3	3.18	44	160	199	140	178	12	100	63	286.5	303	198	6206	6305
	S4220G1D0	2.2	G1-D	50.8	8.5	82.55	M8	12.7	14.3	3.18	44	160	199	140	178	12	100	63	286.5	303	198	6206	6305
	S4220G2A2	2.2	G2-A	82.55	12	106.4	M10	12.7	14.3	3.18	44	160	199	140	178	12	100	63	286.5	303	198	6207	6305
	S4220G2A0							15.88	17.7	4													
	S4220G2A1							19.05	21.4	4.76													
	S4220G2D2	2.2	G2-D	82.55	12	106.4	M10	12.7	14.3	3.18	44	160	199	140	178	12	100	63	286.5	303	198	6207	6305
	S4220G2D0							15.88	17.7	4													
	S4220G2D1							19.05	21.4	4.76													

* The specification is subject to change without notice in advance for the purpose of quality improvement.
* Please contact us for customized model.

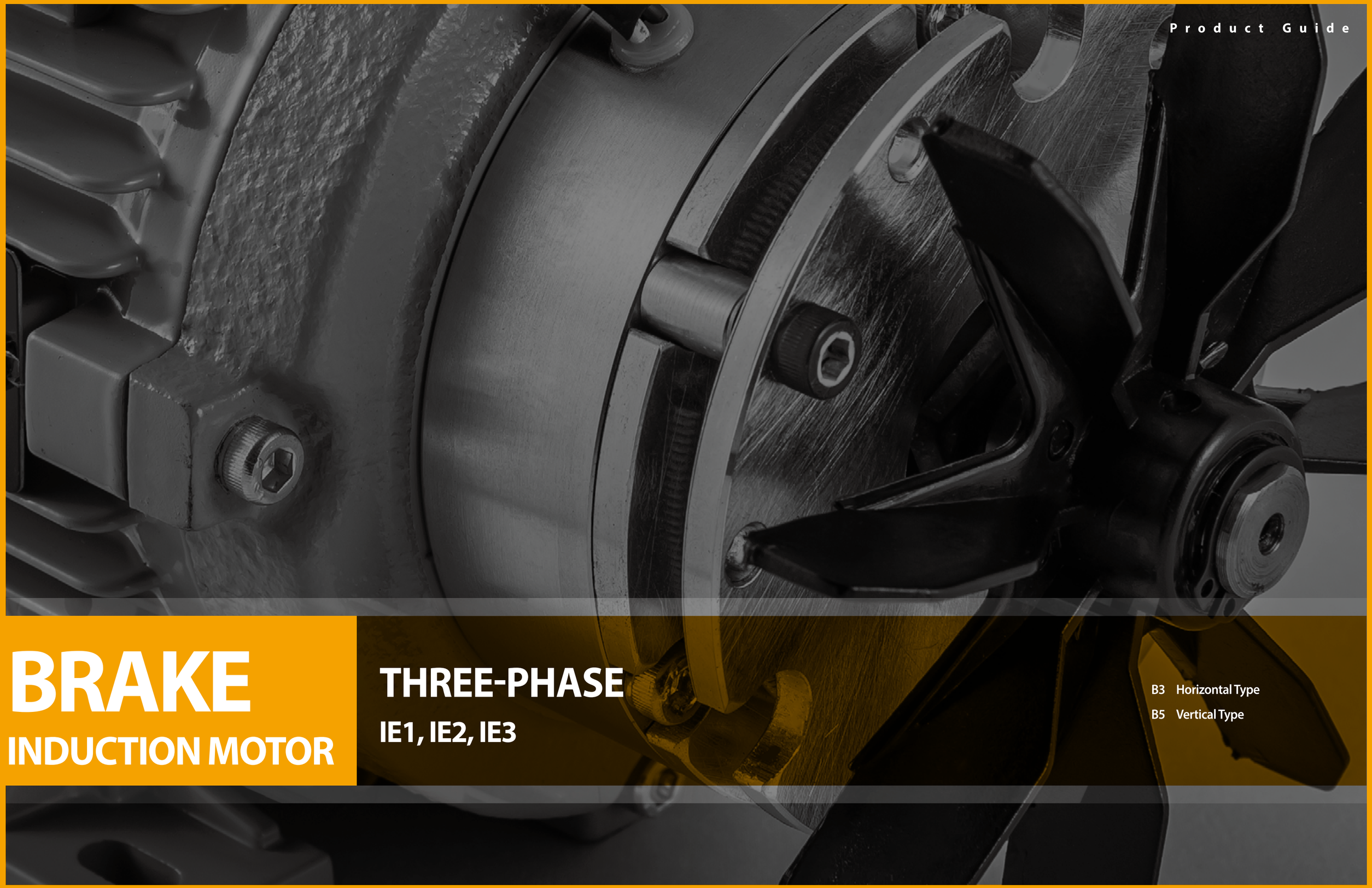

Product Guide

BRAKE INDUCTION MOTOR

THREE-PHASE

IE1, IE2, IE3

B3 Horizontal Type

B5 Vertical Type

BRAKE

Horizontal Type

B3

Brake Three-Phase Induction Motor IE1, IE2, IE3

Scale

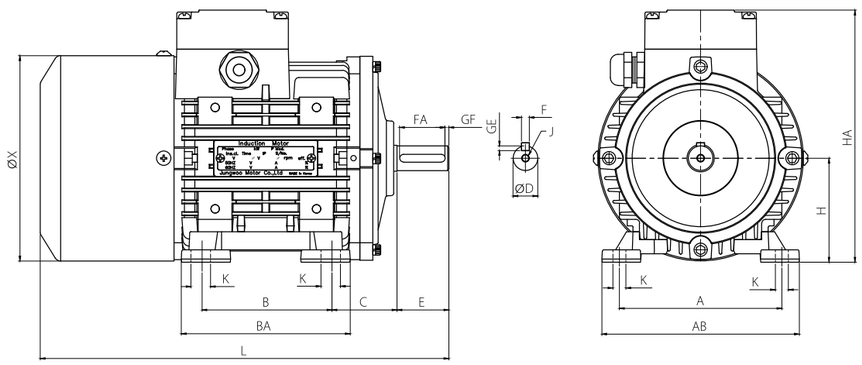

Specification

Frame No.	Output (kW)	Toque T (N.m)	Brake Type	Dimensions (mm)																		Bearing	
				H	A	AB	K	B	BA	C	D	E	F	FA	GE	GF	HA	X	L	J		DE	ODE
63M	0.2	2	BXL-08-10J-02	63	100	124	7	80	99	40	11	23	4	18	2.5	3	157	124	254	-		6202	6202
71M	0.4	2	BXL-08-10J-02	71	112	132	7	90	118	45	14	30	5	25	3	3	174	140	278	M5x15		6203	6203
		4	BXL-08-10J-04																				
80M	0.75	4	BXL-08-10J-04	80	125	152	10	100	130	50	19	40	6	35	3.5	3	194	158	314	M6x15		6204	6203
		8	BXL-10-10J-08																				
90L	1.5	8	BXL-10-10J-08	90	140	168	10	125	162	56	24	50	8	40	4	5	209	176	365	M8x20		6205	6204
		15	BXL-10-10J-15																				
100L	2.2	15	BXL-10-10J-15	100	160	199	12	140	178	63	28	60	8	50	4	5	240	198	420	M10x25		6206	6205
		22	BXL-12-10J-22																				
	3.0	15	BXL-10-10J-15	100	160	199	12	140	178	63	28	60	8	50	4	5	240	198	420	M10x25		6206	6205
		30	BXL-12-10J-30																				
112M	3.7	22	BXL-12-10J-22	112	190	232	12	140	180	70	28	60	8	50	4	5	262	220	440.5	M10x25		6206	6205
		40	BXL-16-10J-40																				
132S	5.5	30	BXL-12-10J-30	132	216	258	12	140	194	89	38	80	10	70	5	5	310	259.4	516	M12x30		6208	6207
		60	BXL-16-10J-60																				
132M	7.5	40	BXL-16-10J-40	132	216	258	12	178	222	89	38	80	10	70	5	5	310	259.4	535	M12x30		6208	6207
		80	BXL-16-10J-80																				

* MikiPully brake is applied as standard.
* The specification is subject to change without notice in advance for the purpose of quality improvement.
* Please contact us for customized model.

BRAKE

Vertical Type

B5

Brake Three-Phase Induction Motor IE1, IE2, IE3

Scale

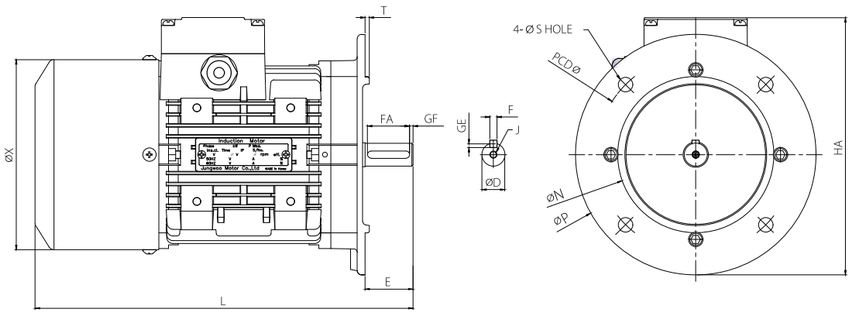

Specification

Flange No.	Frame No.	Output (kW)	Toque T (N.m)	Brake Type	Dimensions (mm)															Bearing	
		4P			HOLE		D	E	F	FA	GE	GF	HA	X	L	N	P	T	J	DE	ODE
					PCD	S															
FF115	63M	0.2	2	BXL-08-10J-02	115	10	11	23	4	18	2.5	3	164	124	254	95	140	3	-	6202	6202
FF130	71M	0.4	2	BXL-08-10J-02	130	10	14	30	5	25	3	3	183	140	278	110	160	3	M5x15	6203	6203
			4	BXL-08-10J-04																	
FF165	80M	0.75	4	BXL-08-10J-04	165	12	19	40	6	35	3.5	3	214	158	314	130	200	3.5	M6x15	6204	6203
			8	BXL-10-10J-08																	
	90L	1.5	8	BXL-10-10J-08	165	12	24	50	8	40	4	5	219	176	365	130	200	3.5	M8x20	6205	6204
			15	BXL-10-10J-15																	
FF215	100L	2.2	15	BXL-10-10J-15	215	15	28	60	8	50	4	5	265	198	420	180	250	4	M10x25	6206	6205
			22	BXL-12-10J-22																	
		3.0	15	BXL-10-10J-15	215	15	28	60	8	50	4	5	265	198	420	180	250	4	M10x25	6206	6205
			30	BXL-12-10J-30																	
	112M	3.7	22	BXL-12-10J-22	215	15	28	60	8	50	4	5	275	220	440.5	180	250	4	M10x25	6206	6205
			40	BXL-16-10J-40																	
FF265	132S	5.5	30	BXL-12-10J-30	265	15	38	80	10	70	5	5	328	259.4	516	230	300	4	M12x30	6208	6207
			60	BXL-16-10J-60																	
	132M	7.5	40	BXL-16-10J-40	265	15	38	80	10	70	5	5	328	259.4	535	230	300	4	M12x30	6208	6207
			80	BXL-16-10J-80																	

* MikiPully brake is applied as standard.
* The specification is subject to change without notice in advance for the purpose of quality improvement.
* Please contact us for customized model.

INVERTER MOTOR

THREE-PHASE
SINGLE-PHASE

B3 Horizontal Type
B5 Vertical Type
B35 Horizontal-Vertical Type
B14 C-Face Type
B34 Horizontal C-Face Type

INVERTER MOTOR

JUNGWOO INVERTER MOTOR

INVERTER MOTOR

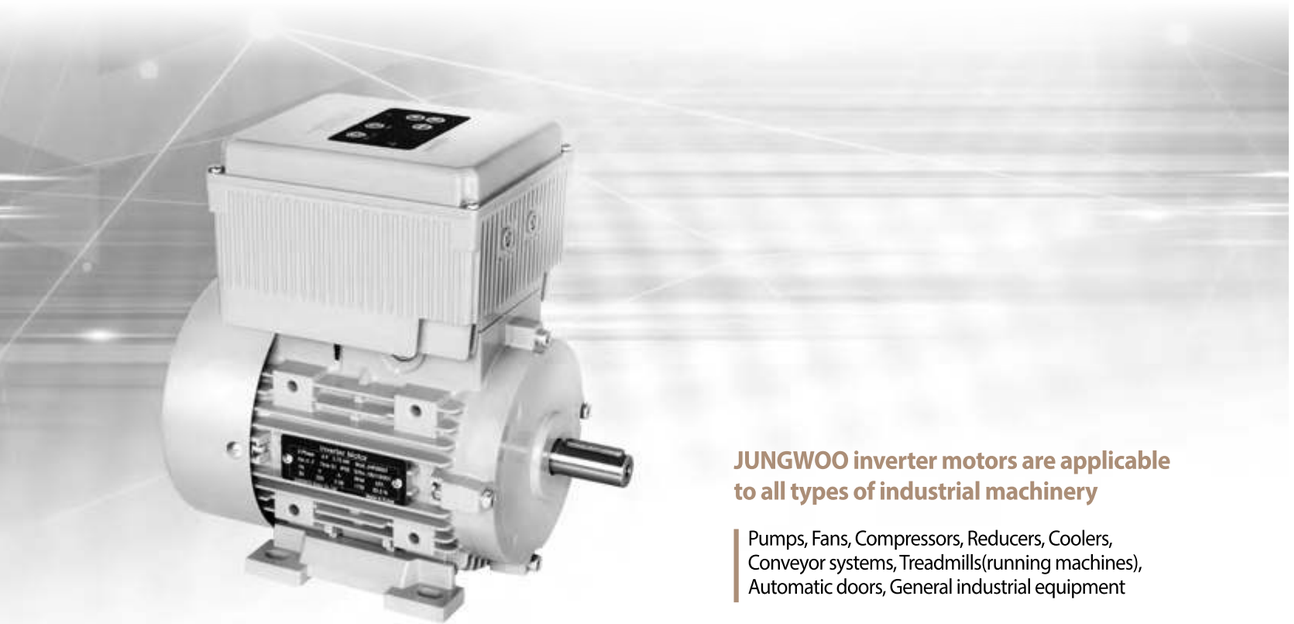

JUNGWOO inverter motors are applicable to all types of industrial machinery

Pumps, Fans, Compressors, Reducers, Coolers, Conveyor systems, Treadmills(running machines), Automatic doors, General industrial equipment

Product Characteristics

Easy to install

- An integrated motor-inverter design eliminates the need for separate inverter installation, maximizing user convenience

Sensorless vector control

- Generates a 6-70Hz static torque and can accommodate up to 150Hz (max)
- Sensorless vector control makes JW inverter motors a perfect fit for low-speed / heavy-duty applications (conveyor loads, etc.)

Easy manipulation

- JW motors are easy to operate. Also, remote manipulation available via a separate module (optional)

IP rating

- IP55

Communication features

- Embedded with basic communication functions, JW inverter motors control a single or multiple units of equipment when connected to PC or other devices without additional components (interface card, etc.). (Separate protocol adjustments, RS-485)

High efficiency & high performance

- Our optimized product design materializes premium efficiency and outstanding cooling performance

Higher stability

- The embedded basic filtering reduces harmonic interference. The built-in protection features (undervoltage, overvoltage, overcurrent, communication error detection) ensure stable motor usability

Product Features

- **Product Features** : Sensorless vector control
- **Operation type** : Operating mode → Consistent speed control (RPM/frequency), RS-485 communication standard, selectable regular/reverse operation
- **Cooling type** : Forced-air cooling, motor fan cooling
- **Braking type** : Built-in port that accommodates regenerative braking mechanism (separate external RBM module attachable)
- **Protection feature** : Can detect error in overcurrent (ErOC), overheating (ErOH), overvoltage (ErOV), low voltage (ErLV), and communication (ErIF)
- **Service environment** :
  - Ambient temperature: -10℃ - 40℃
  - Holding temperature: -20℃ - 60℃
  - Ambient/relative humidity: At or below 90% of RH
  - IP rating: IP55
- **Auxiliary feature (optional)** : External voltage control (0-10V), emergency stop input, pressure control (with sensing), contact status output (operation, stop, error)

Display

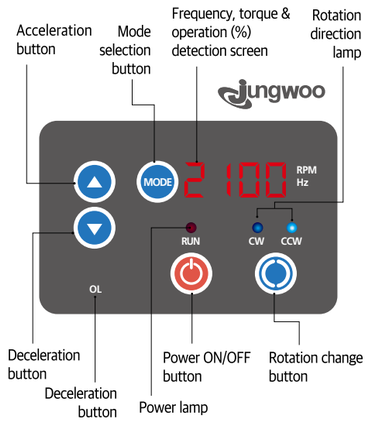

Specification

Input voltage	Model no.	Motor capacity		Frame reference		Motor exterior type	Input frequency	Output voltage	Output frequency	Power cable connection (basic spec. for product release)
		HP	kW	2P	4P					
Single-phase AC 220V (±10%)	JIM-1040S	½	0.4	71M	71M	B3,B5,B35 B34,B14	60 Hz (±5%)	Three-phase 220V max.	6~150 Hz max.	• Single-phase: (Power Code) • Three-phase: (Terminal Block)
	JIM-1055S	¾	0.55	71M	71M					
	JIM-1075S	1	0.75	80M	80M					
	JIM-1150S	2	1.5	90L	90L					
	JIM-1220S	3	2.2	90L	100L					
Three-phase AC 380 ~440V (±10%)	JIM-3075S	1	0.75	80M	80M			Three-phase 380~440V max.		
	JIM-3150S	2	1.5	90L	90L					
	JIM-3220S	3	2.2	90L	100L					
	JIM-3300S	4	3	100L						
	JIM-3370S	5	3.7	112M						

* The specification is subject to change without notice in advance for the purpose of quality improvement.
* Please contact us for customized model.

Product Guide

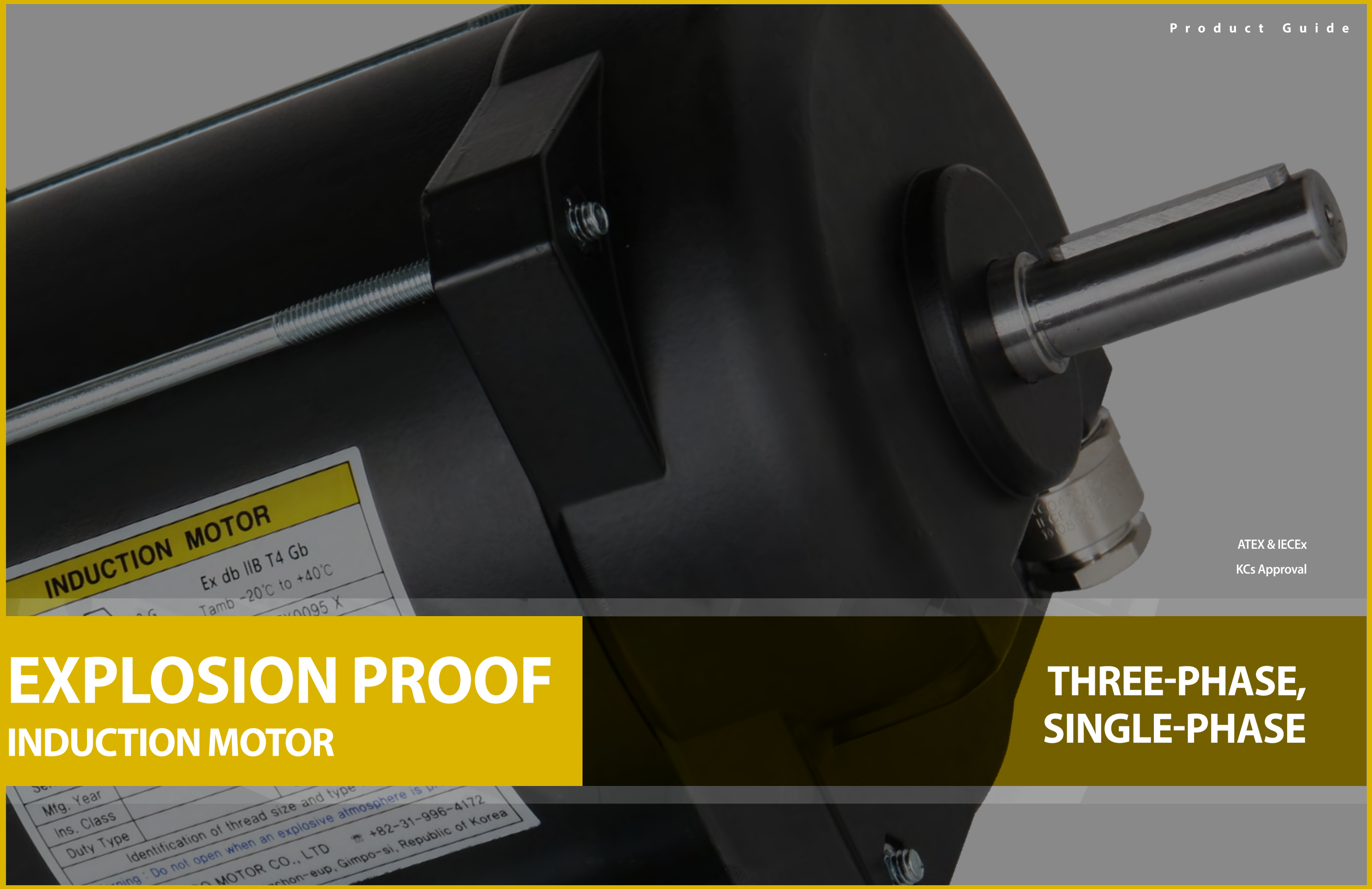

ATEX & IECEx

KCs Approval

EXPLOSION PROOF

INDUCTION MOTOR

THREE-PHASE, SINGLE-PHASE

EXPLOSION PROOF

II 2 G Ex db IIB T4 Gb

Three-Phase ATEX & IECEx KCs Approval

Scale

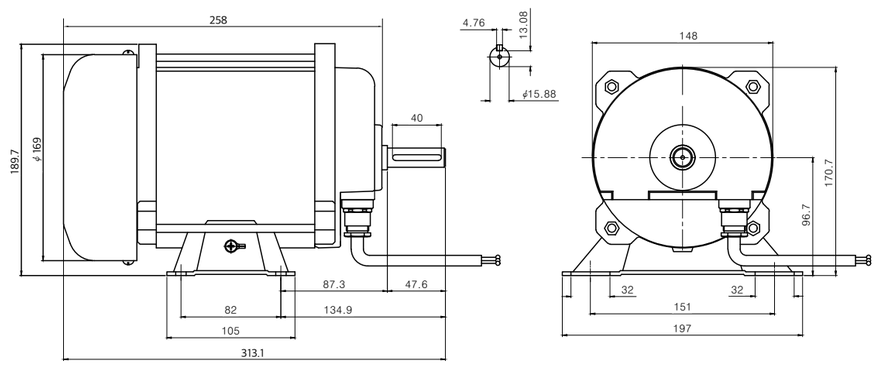

Specification

구분	주파수 (Hz)	전압 (V)	무부하 전류 (A)	정격전류 (A)	정격입력 (W)	정격출력 (W)	효율 (%)	역율 (%)	회전수 (rpm)	정동토크 (%)	기동토크 (%)	기동전류 (A)
0.4kW	50	220	1.47	1.9	525	400	76	72	1440	333	274	11.2
		380	0.85	1.1								6.5
	60	220	1.04	1.74	486	400	82.3	73.3	1730	280	210	10.4
		380	0.6	1								6
0.75kW	50	220	1.8	3.16	956	750	78.4	80	1410	287	289	19
		380	1.03	1.82								11
	60	220	1.24	3	954	750	78.6	84	1690	241	209	15.9
		380	0.72	1.72								9.2

* The specification is subject to change without notice in advance for the purpose of quality improvement.
* Please contact us for customized model.
* KOSHA : Korean Occupational Safety & Health Agency

II 2 G Ex db IIB T4 Gb

EXPLOSION PROOF

Single Phase ATEX & IECEx KCs Approval

Scale

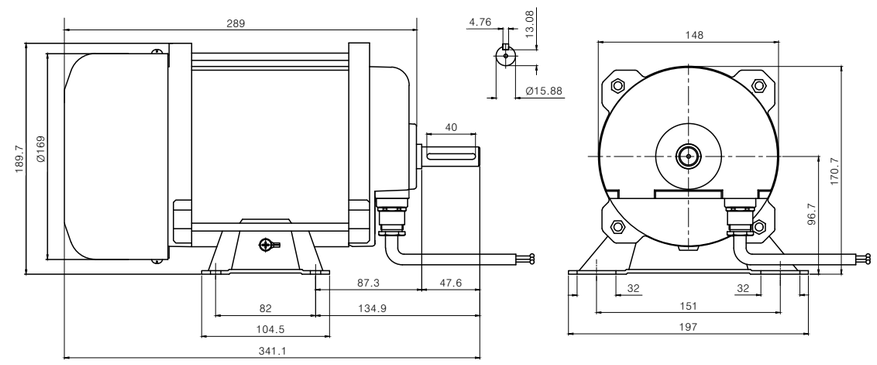

Specification

구분	주파수 (Hz)	전압 (V)	무부하 전류 (A)	정격전류 (A)	정격입력 (W)	정격출력 (W)	효율 (%)	역율 (%)	회전수 (rpm)	정동토크 (%)	기동토크 (%)	기동전류 (A)
0.4kW	50	220	2.9	3.46	628	400	63.7	82.5	1450	228	266	19
	60	220	1	2.7	568	400	70.4	95.6	1750	308	322	18
0.75kW	50	220	3.1	4.95	1016	750	73.8	93	1440	330	285	32
	60	220	1.48	4.6	1000	750	75	99	1740	247	286	25.7

* The specification is subject to change without notice in advance for the purpose of quality improvement.
* Please contact us for customized model.
* KOSHA : Korean Occupational Safety & Health Agency

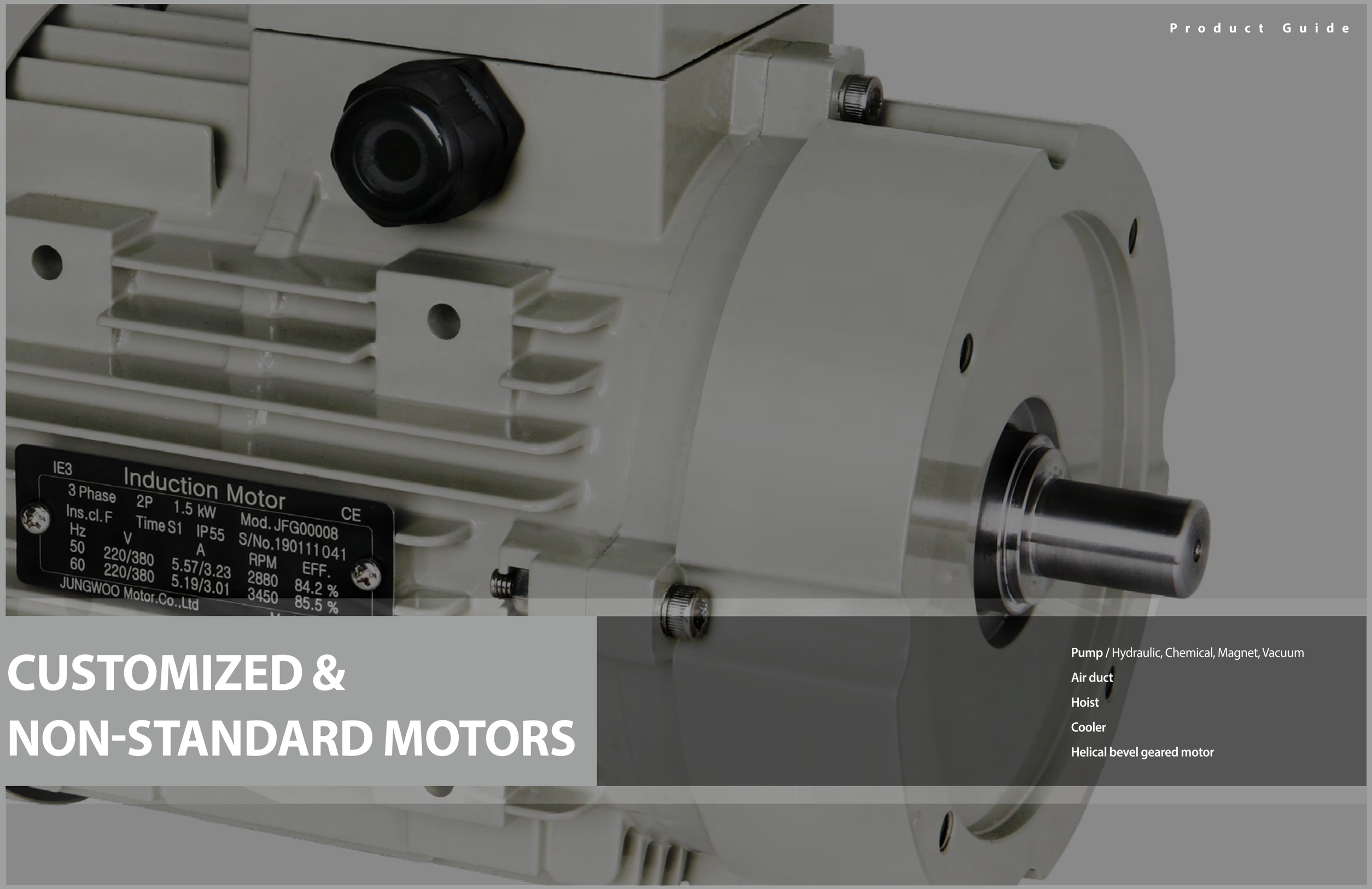

CUSTOMIZED & NON-STANDARD MOTORS

Pump / Hydraulic, Chemical, Magnet, Vacuum

Air duct

Hoist

Cooler

Helical bevel geared motor

Customized & Non-Standard Motors

Pump motor / Hydraulic

Pump motor / Chemical

Pump motor / Magnet

Insulation B motor

Cooler motor

Air duct motor

Helical bevel geared motor

Hoist motor

Efficiency Infomation

IEC Standard

Table		IE1		IE2		IE3	
Pole (P)	Capacity (kW)	Standard Efficiency		Standard Efficiency		Standard Efficiency	
		50Hz	60Hz	50Hz	60Hz	50Hz	60Hz
2P	0.2	54.6	62	61.9	64	67.2	65.6
	0.4	64.9	70	70.4	72	74.6	73.4
	0.55	69	72	74.1	74	77.8	76.8
	0.75	72.1	74	77.4	75.5	80.7	77
	1.1	75	78.5	79.6	82.5	82.7	84
	1.5	77.2	81	81.3	84	84.2	85.5
	2.2	79.7	81.5	83.2	85.5	85.9	86.5
	3.0	81.5	84.5	84.6	87.5	87.1	88.5
	3.7	83.1	84.5	85.8	87.5	88.1	88.5
	4.0	83.1	84.5	85.8	87.5	88.1	88.5
	5.5	84.7	86	87	88.5	89.2	89.5
	7.5	86	87.5	88.1	89.5	90.1	90.2
	11	87.6	87.5	89.4	90.2	91.2	91
	15	88.7	88.5	90.3	90.2	91.9	91
	18.5	89.3	89.5	90.9	91	92.4	91.7
4P	0.2	58.5	66	65.9	68	71.1	69.5
	0.4	66.8	70	73.5	72	78	78.2
	0.55	70	74	77.1	75.5	80.8	81.1
	0.75	72.1	77	79.6	78	82.5	83.5
	1.1	75	79	81.4	84	84.1	86.5
	1.5	77.2	81.5	82.8	84	85.3	86.5
	2.2	79.7	83	84.3	87.5	86.7	89.5
	3.0	81.5	85	85.5	87.5	87.7	89.5
	3.7	83.1	85	86.6	87.5	88.6	89.5
	4.0	83.1	85	86.6	87.5	88.6	89.5
	5.5	84.7	87	87.7	89.5	89.6	91.7
	7.5	86	87.5	88.7	89.5	90.4	91.7
	11	87.6	88.5	89.8	91	91.4	92.4
	15	88.7	89.5	90.6	91	92.1	93
6P	0.2	47.6	52.5	58.2	55	65.4	67.5
	0.4	61.1	62	68.8	64	74.4	75.3
	0.55	65.8	66	73.1	68	77.2	81.7
	0.75	70	72	75.9	73	78.9	82.5
	1.1	72.9	75	78.1	85.5	81	87.5
	1.5	75.2	77	79.8	86.5	82.5	88.5
	2.2	77.7	78.5	81.8	87.5	84.3	89.5
	3.0	79.7	83.5	83.3	87.5	85.6	89.5
	3.7	81.4	83.5	84.6	87.5	86.8	89.5
	4.0	81.4	83.5	84.6	87.5	86.8	89.5
	5.5	83.1	85	86	89.5	88	91
	7.5	84.7	86	87.2	89.5	89.1	91
	11	86.4	89	88.7	90.2	90.3	91.7
8P	0.2	39.7	40	47.4	46	60.6	64
	0.4	50.9	57.5	57.2	58	70.1	72
	0.55	56.1	59.5	61.7	62	73	74
	0.75	61.2	64	66.2	66	75	75.5
	1.1	66.5	73.5	70.8	75.5	77.7	78.5
	1.5	70.2	77	74.1	82.5	79.7	84
	2.2	74.2	78	77.6	84	81.9	85.5
	3.0	77	80	80	85.5	83.5	86.5
	3.7	79.2	80	81.9	85.5	84.8	86.5
	4.0	79.2	80	81.9	85.5	84.8	86.5
	5.5	81.4	84	83.8	85.5	86.2	86.5
	7.5	83.1	85	85.3	88.5	87.3	89.5

KS Standard

Table		IE1	IE2	IE3
Pole (P)	Capacity (kW)	60Hz	60Hz	60Hz
2P	0.2	56	74.5	-
	0.4	64	75	-
	0.75	70	75.5	77
	1.1	70	75.5	-
	1.5	76	84	85.5
	2.2	79.5	85.5	86.5
	3.7	82.5	87.5	88.5
	5.5	84.5	88.5	89.5
	7.5	85.5	89.5	90.2
	11	86.5	90.2	91
	15	88	90.2	91
	18.5	88	91	91.7
4P	0.2	58	74.7	-
	0.4	65	79.3	-
	0.75	71.5	82.5	83.5
	1.1	71.5	82.5	-
	1.5	78	84	86.5
	2.2	81	87.5	89.5
	3.7	83	87.5	89.5
	5.5	85	89.5	91.7
	7.5	86	89.5	91.7
	11	87	91	92.4
	15	88	91	93
6P	0.4	64	78	-
	0.75	70	80	82.5
	1.1	70	80	-
	1.5	76.5	86.5	88.5
	2.2	79.5	87.5	89.5
	3.7	82.5	87.5	89.5
	5.5	84.5	89.5	91
	7.5	85.5	89.5	91
	11	86.5	90.2	91.7
8P	0.4	64	74	-
	0.75	70	74	75.5
	1.1	70	74	-
	1.5	73	82.5	84
	2.2	75	84	85.5
	3.7	78	85.5	86.5
	5.5	80	85.5	86.5
	7.5	81	88.5	89.5

Connection Diagram

Three Phase

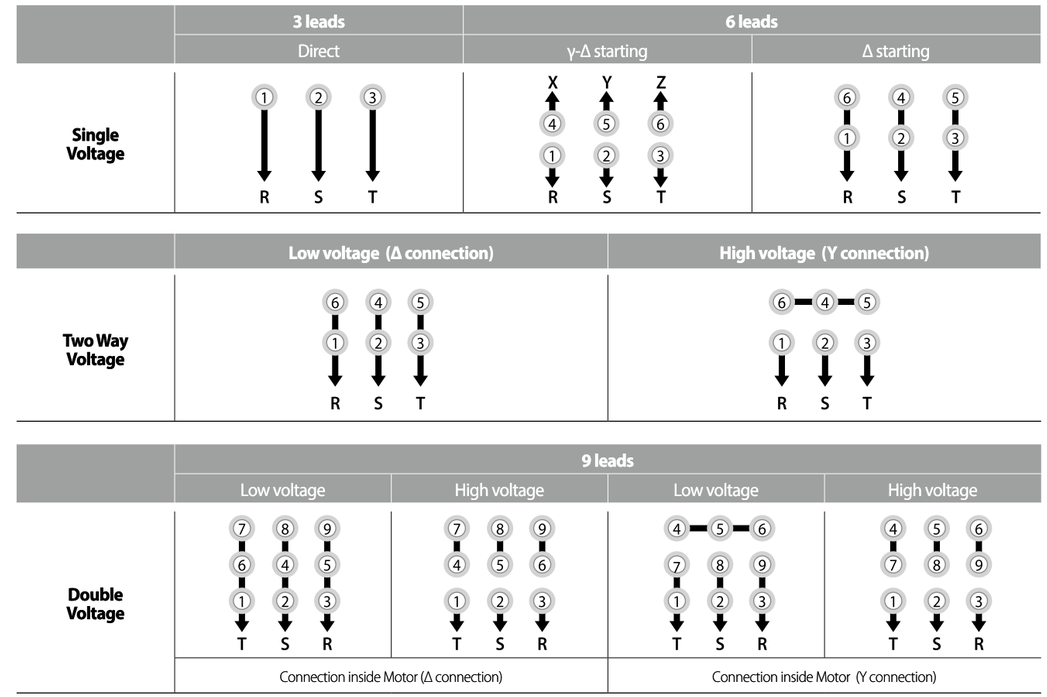

Single Phase

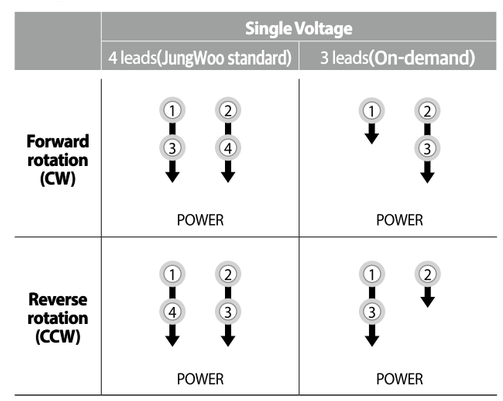

New terminal of JungWoo Motor (Simple type)

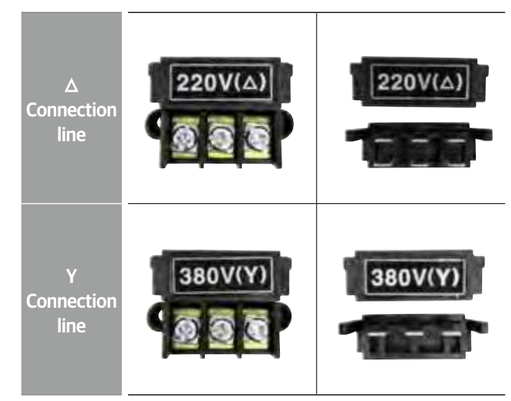

• Applies up to 90L frame (2 pole 2.2KW, 4 pole 1.5KW).

Technical data of motor

Classification of protection method (IEC & KS classifications)

Classification / Class	First number Type of protection on the human body and solid foreign objects	Second number Type of protection from the infiltration of water	General name
IP22	Structure that allows the finger not to touch the rotating or conducting part of the device	Structure that is not harmfully influenced by the water drops falling within the range of 15° from vertical line	Protection type of DRIP PROOF Spinning
IP23	Structure that prevents the infiltration of the solid foreign object bigger than 12mm	Structure that is not harmfully influenced by the water drops falling in the range of 60° from vertical line	Protection type of DRIP PROOF Spinning
IP44	Structure that allows the things thicker than 1mm, such as tools and wires, not to touch the rotating or conducting part in the device. Structure that prevents the infiltration of the solid foreign objects whose diameter is bigger than 1mm. However, drainage and ventilation holes could be the structure of mark 2.	Structure that is not influenced by the water drops falling from any direction	Totally-enclosed
IP54	Structure that allows any objects not to touch the rotating or conducting part of the device	Structure that is not influenced by the water drops falling from any direction	Weather Proof
IP55	Structure that positively prevents the infiltration of dusts, and does not influence normal operation even if it is infiltrated	Structure that is not harmfully influenced even if the water is sprayed from any direction	Hose Proof

Starting Method & Characteristics

Starting characteristics / Starting method	Starting torque	Starting current	Terminal voltage
Full-voltage starting	TS=100%	IS=100%	TS=100%
Y-Δ starting Reactor starting a=35% tap a=50% tap	TSx1/3 TSx(1-a/100)^2 TSx0.42 TSx0.25	ISx1/3 TSx(1-a/100)^2 ISx0.65 ISx0.5	57.70% 35% 50%
Autotransformer starting a=80% tap a=65% tap	ISxa^2 ISx0.64 ISx0.42	ISxa^2 ISx0.64 ISx0.42	80% 65%

Conversion Table of Acceptance Output

Refrigerant temperature	Acceptance output against standard rating	Altitude (Based on sea level)	Acceptance output against standard rating
Under 30˚C	107%	Under 1,000mm	100%
30˚C ~ 40˚C	100%	Over 1,000m~1,500m	97%
Over 40˚C ~ 45˚C	96%	Over 1,500m~2,000m	94%
Over 45˚C ~ 50˚C	92%	Over 2,000m~2,500m	90%
Over 50˚C ~ 55˚C	87%	Over 2,500m~3,000m	86%
Over 55˚C ~ 60˚C	82%	Over 3,000m~3,500m	82%
		Over 3,500m~4,000m	77%

Technical data of motor

Installation

(Install the motor allowing its intake and exhaust ports for cooling to be away from the wall or other obstacles by more than 20cm)

1. Select protection type or totally-enclosed type considering the surrounding condition
2. Install in a dry and well-ventilated place
3. Use big mounting bolt as long as it fits in to the hole of motor base
4. Motor with standard ball bearing can be installed in any angle

Starting & Operation

1. Operate with no load to check the connection and rotating direction. Normal motors are operated without any problem with 10% of voltage regulation and 5% of frequency variation rates, however, the conditions may not be the same.
2. When full load starting (100% of load when starting), it may not operate if using γ-Δ switch, reactor and starting compensator as the starting torque decreases.
3. When operating the continuously usable motor, the operational current should be smaller than the indicated one in the name plate, and you should check the load and motor if the current value is high.

Check in-operation

1. Operate the motor with no load to check the connection and rotating direction. If the rotating direction is reverse, connect them by changing two lines out of three.
2. Check if the loaded current is below the one in the name plate, and inspect the motor and load if there is an over-current
3. Measure the rotating speed of the motor, and compare it with the one in the name plate
4. Check the temperature, and verify if there is any abnormality.

Check before operation

1. Visual inspection checking if there is a damaged part while transporting
2. Check if the shaft turns freely by turning it with hands
3. Check if the supplied power (voltage, frequency, constant) is the same as the one in the name plate
4. Check if the motor is well fixed
5. In case of line-starting, you should allow the bearings not to be shocked by positioning the shaft and the center of driven object's shaft in line.
6. Connection
   - Check if the voltage, constant, frequency and type of supplied power are the same as the ones indicated in the name plate and connect the lines. Make sure that the power system is connected through safety switch and overload protection device. To change the rotating direction, change 2 random lines and connect.
   - As the connection is different depending on the types such as 3 leads for line-starting, 6 leads for γ-Δ starting and 9 leads for 2 voltage, connect it according to the connection diagram in the plate.

Weight Table

Unit: kg

Phase	Terminal	Type	0.2kW	0.4kW	0.75kW	1.5kW	2.2kW	3.7kW	5.5kW	7.5kW	11kW	15kW	18.5kW
Three phase	2P	B3	4.9	6.7	9.6	14.5	16.5	24.9	39.0	50.2	75	133	153
		B5	4.9	6.7	9.6	14.7	16.6	24.5	37.7	49.8	71	128	148
	4P	B3	4.9	7.2	11.5	18.2	26.7	32.8	53.0	66.2	123	143	-
		B5	4.9	7.3	11.6	18.2	26.8	32.6	53.4	62.8	118	138	-

Phase	Terminal	Type	0.2kW	0.4kW	0.75kW	1.5kW	2.2kW
Single phase	2P	B3	5.5	7.3	10.4	15.3	17.8
		B5	5.5	7.3	10.6	15.5	18.0
	4P	B3	6.7	10.5	14.9	17.9	26.6
		B5	6.8	10.7	15.1	18.0	26.7

* Remark: 3 phase is based on E3

Instruction Manual

Receipt

1. Check if there are abnormalities as soon as receiving the product as there may be a possible damage caused while transporting.
2. In addition, check if the size, type, capacity, voltage, frequency and serial number indicated in the name plate are the same as that of the order sheet, and also check the basic things such as damaged and deformed part of the motor. If there is abnormality or problem, contact the company's office or agency where you purchased the product.

Transportation

When pulling up the motor, use the pulling device (loop) if it is available.

- **Danger** Do not walk under the place where the motor is hanged by transportation equipment (crane, hoist). It may cause death or fatal wound due to falling. In addition, do not lift while the motor and loader are connected.
- **Warning** When pulling up the product using pulling loops of the crane or hoist, make it tight using wires or ropes and check the state on every side if it is tightly fixed. If it is not checked, it may cause serious injury due to falling.

Storage

Store the motor in a dry, clean and well ventilated place where there is no vibration and less temperature change. If storing for longer than 1 month, manage it as follows.

- Anticorrosive coating is applied when the product is delivered for preventing rusts, however, check it periodically as it may be corroded depending on the condition of storing place.
- Operate the motor periodically to prevent rust on the bearings. (More than 5 minutes, once per month)
- Manage the insulating state by measuring insulation resistance periodically. (Check more than once per three month using 500V insulation resistance tester: Reference value = rated voltage/higher than 1000+1[MΩ])
- If storing the motor for more than 3 months in the humid place which may be infiltrated by moisture and foreign objects, seal the whole motor with water-proof cover after inserting a desiccant.

Installation

Conditions of installing place

1. Use the product in the place of which the surrounding temperature is -15˚C~40˚C, humidity is below 80% and altitude above sea level is lower than 1000m. If it has to be used in the place of which the altitude above sea level is higher than 1000m, surrounding temperature is below - 15˚C or over 40˚C, and humidity is over 80%, use the proper motor by consulting with the design department of our company.
2. Use the product in a well-ventilated place where there is less dust or moisture and it is easy to check the motor.
3. Avoid the place where there is moisture and oil, or external vibration is directly delivered.
4. In case of installing the product outdoors, be sure to use the motor for outdoors. As the normal motor is for indoor use, it cannot be used in outdoors.
5. Especially, avoid using the product in a place with salinity such as near the ocean.

- **Danger** In the explosion district (inflammable and explosive gas and dust), use the motor suitable to the explosion-proof standard. Using standard motor may cause fatal human or material damage due to explosion or fire.
- **Caution** Install the motor allowing its intake and exhaust ports for cooling to be away from the wall or other obstacles by more than 20cm. It may cause danger of electric shock, fire or burning as the motor is overheated.

Foundation & Installation

1. If installing on a concrete floor, make the foundation higher than the floor for easy drainage, and make sure that the 4 corners of the base could be supported safely by the foundation. Level the product using shims if needed.
2. If installing on an additional base, make it sturdy as it may cause vibration by dynamic load while operating
3. Check the rotating direction before connecting the spindle with utilization equipment.

- **Danger** When the installation is completed, earth the product before connecting power, according to the related regulations.

Connection to utilization equipment

1. Direct connection

- Refer to the picture below for connecting method and degree of coupling ring.

Size measurement position	H1 (Measuring 4 spots)	V2 (Measuring 4 spots)	V1
Rigid Coupling	3/100mm and less	3/100mm and less	1/100mm
Flexible Coupling	4/100mm and less	5/100mm and less	Based on the standard of coupling ring

- Make the axis center of the motor and that of connecting utilization equipment lined up straight.
- When attaching a coupling ring to the spindle of the motor, apply lubricants or oil, and insert it while pressurizing with a tool like wooden hammer so that it should not be damaged by shock. If there is interference when fitting the spindle of the motor, be sure to use shrinkage fitting.

2. Belt-type connection

- First, maintain the axes of the motor and utilization equipment paralleled, and make the center of pulleys of both side matched so that they can make a right angle with the axis as shown in the picture below. If the centers of connecting pulleys are not matched, it may cause a breakdown of the motor as excessive force is imposed to the spindle and bearings.
- When connecting a pulley to the spindle of the motor, apply lubricants or oil to make it fully lubricated, and insert it by pressurizing while lightly tapping with a tool like wooden hammer so that it should not be damaged by shock. If there is interference when fitting the spindle of the motor, be sure to use shrinkage fitting.
- Select and apply the pulley and V-belt according to the standard specifications prescribed in KSC4202, and as the tension of belt and diameter of pulley influence the life of bearing and the strength of spindle, it is recommended to use a standard V-belt according to the regulations of KSM6535 and KSM6593.
- Connect the pulley as shown in the picture below.

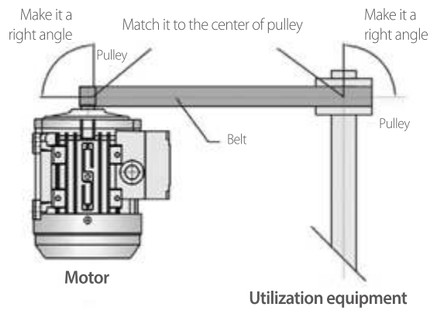

JungWoo Motor will think over customers, society and future.

JungWoo Motor Co., Ltd. is growing consistently with the thought of contributing to the human society by creating the best products and services based on the talents and technology. JungWoo Motor Co., Ltd. will increase the customer satisfaction rate, and born again as the most highly-rated company which fulfills the environmental and social responsibilities.