FORGING·FLANGES

ISO 14001 | ISO 9001 | NORSOK | PED | OHSAS 18001

Total Catalogue DH-201705

DAE HEUNG
Forging·Flanges

DAE HEUNG IND. CO., LTD.

■ MAIN OFFICE(FLANGE/FORGING)
(50850) 135, Gimhae-daero 974beon-gil,
Hallim-myeon, Gimhae-si,
Gyeongsangnam-do Korea
TEL:+82-55-310-6700/6770
FAX:+82-55-310-6740/6720
E-mail:sales1@daeheungind.kr
sales4@daeheungind.kr

■ BRANCH(FORGING)
(50802) 413-2, Saengnim-daero, Saengnim-
myeon, Gimhae-si, Gyeongsangnam-do , Korea
TEL:+82-55-329-2842
FAX:+82-55-329-2845
E-mail:thforging@hanmail.net

■ SEOUL OFFICE
(01470) 14-6, Deongneung-ro 59da-gil,
Dobong-gu, Seoul, Korea
TEL:+82-2-904-2542
FAX:+82-2-906-2543
E-mail:sales1@daeheungind.kr

■ BRANCH(AIR-HAMMER)
(46754) 23, Noksansaneopbuk-ro 313beon-gil,
Gangseo-gu, Busan , Korea
TEL:+82-51-832-6501
FAX:+82-51-831-6540
E-mail:dhf@daeheungforging.co.kr

기획제작 : 한국상사 (051) 303-9009 / 201705

DAE HEUNG IND. CO., LTD.

DAE HEUNG IND. CO., LTD.

Greetings

It's great pleasure for us to introduce Dae-Heung to our friends and customers. We have been manufacturing High Pressure Flanges since we had established our company in 1983.

We have the latest new model of manufacturing facilities and the latest test instruments for the best quality.

In addition we've participated in many domestic and overseas projects and we've produced the best quality products with our best engineers and production personnel. Our major customers are Hyundai Heavy Industries Co., Ltd., Doosan Heavy Industries and Construction, Samsung Heavy Industries Co., Ltd., GS Engineering & Construction, Korea Gas Corporation, SK Engineering & Construction, etc.

We have participated in many projects of refinery and chemical plants, and we have supplied not only the standard products such as ANSI/ASME, JIS, MSS, DIN, and AWWA, but also the non-standard flanges like forged neck, nozzle type flanges etc, requiring special procedures such as weld overlay lining.

Especially, being set up the new forging factory in 2011 year,
We make sure of competitive price and are on progress of beating a new path with our world class customers.

Also, awarding ISO9001, ISO14001, OHSAS18001, NORSOK, PED and classification of BV, LR, ABS, DNV, GL, NK, KR, RINA, CCS. We are always trying to develop the quality of products and to accord with the customer's requirement.

We hope that you would encourage our efforts in the years ahead.

JAE WHAN, KIM
PRESIDENT

CERTIFICATES

BUREAU VERITAS
Certification

Daeheung Industrial Co., Ltd.
#135, Gimhae-daero 974beon-gil, Hallim-myeon, Gimhae-si, Gyeongsangnam-do, Korea

Bureau Veritas Certification Holding SAS – UK Branch certify that the Management System of the above organisation has been audited and found to be in accordance with the requirements of the management system standards detailed below

ISO 9001:2008

Scope of certification

Manufacturing and Servicing of Forged Steel and Steel Flanges

Original cycle start date: 21 October 2013
Expiry date of previous cycle: 20 October 2016
Certification / Recertification Audit date: 09 September 2016

Certification / Recertification cycle start date: 06 October 2016

Subject to the continued satisfactory operation of the organisation's Management System, this certificate expires on: 14 September 2018

Certificate No. 10BK020980 Version 1, Revision date: 06 October 2016

Signed on behalf of BVCH SAS UK Branch

UKAS

■ ISO 9001:2008 ■

BUREAU VERITAS
Certification

Daeheung Industrial Co., Ltd.
#135, Gimhae-daero 974beon-gil, Hallim-myeon, Gimhae-si, Gyeongsangnam-do, Korea

Bureau Veritas Certification certify that the Management System of the above organisation has been audited and found to be in accordance with the requirements of the management system standards detailed below

Standards

ISO 14001:2004 / KS I ISO 14001:2009

Scope of certification

Manufuacturing and Servicing of Forged Steel and Steel Flanges

Certification cycle start date: 04 May 2014

Subject to the continued satisfactory operation of the organisation's Management System, this certificate expires on: 03 May 2017

Original certification date: 04 May 2011

Certificate No. 20BK30118-UK Version N, Revision date: 22 April 2014

Certification Authority

UKAS

■ ISO 14001:2004 ■

BUREAU VERITAS

CERTIFICATE OF APPROVAL FOR QUALITY ASSURANCE
SYSTEM OF MANUFACTURING OF MATERIALS
CERTIFICATION D'APPROBATION DE SYSTEME DE QUALITE
POUR LA FABRICATION DE MATERIAUX
N° CE-PED-MM-OHI 001-14-KOR

BUREAU VERITAS S.A., hereby certifies that the below named material manufacturer has established and applies a Quality Management System and has undergone a Specific Assessment for Materials according to:

The European Pressure Equipment Directive 97/23/EC and its annex 1§4.3

BUREAU VERITAS S.A., certifie que le fabricant de matériaux mentionné ci-dessous a mis en place et applique un système de management de la qualité, qui a fait l'objet d'une évaluation spécifique conformément à

La directive européenne 97/23/CE et son annexe 1§4.3

Manufacturer (names) / Fabricant (noms): Daeheung Industry Co., Ltd.

Address / Adresse: #135, Gimhae-daero 974beon-gil, Hallim-myeon, Gimhae-si, Gyeongsangnam-do, 621-873, Korea

Identification of material concerned (list attached when necessary): see Annex pages 2/3 & 3/3
Identification des matériaux concernés (liste en annexe le cas échéant)

Quality Assurance systems approval number : Certificate nr. 10BK03587, Valid date : October 20th, 2016
Numéro d'approbation du système d'assurance qualité

This certificate is valid until: August 6th, 2017
Cette attestation est valable jusqu'au :

The approval is conditional upon the surveillance audits, tests and verifications to be carried out by Bureau Veritas, as per the provisions stated in the agreement signed by both the manufacturer and Bureau Veritas.
La maintien de l'approbation est soumis à la réalisation par Bureau Veritas des audits, essais et vérifications selon le contrat signé par le fabricant et Bureau Veritas.

This certificate shall be deemed to be void and the manufacturer shall store bear any consequences pursuant to its use, where the manufacturer fails to comply with his undertakings as per the agreement in respect of implementation of the approved quality system and inspection and tests on the final product.
Cette attestation est présumée nulle et le fabricant supportera seul les conséquences de son utilisation, si les soussignés dénoncés par le fabricant suite de la demande d'intervention en matière d'application de son système qualité approuvé, et d'inspection et d'essais des produits fini se révèlent inexactes.

Issued at / Délivré à	On / Le	Signed by / Rédigé par	Checked by / Vérifié par
Seoul	August 6th, 2014	Heesil PARK	Isabelle DIAN

Registration code / Code d'enregistrement 20149.6T1.3436

This certificate is subject to the terms of Bureau Veritas General Conditions of Service attached to the agreement signed by the applicant.
La présente attestation est soumise aux Conditions Générales de Service de Bureau Veritas jointes à la demande d'intervention signée par le demandeur.

Bureau Veritas S.A. 67-71 Boulevard du Château, 92200 Neuilly sur Seine, France

■ PED 97/23/EC ■

BUREAU VERITAS
Certification

Daeheung Industrial Co., Ltd.
#135, Gimhae-daero 974beon-gil, Hallim-myeon, Gimhae-si, Gyeongsangnam-do, Korea

Bureau Veritas Certification certify that the Management System of the above organisation has been audited and found to be in accordance with the requirements of the management system standards detailed below

Standards

OHSAS 18001:2007

Scope of certification

Manufacturing and Servicing of Forged Steel and Steel Flanges

Certification cycle start date: 30 September 2014

Subject to the continued satisfactory operation of the organisation's Management System, this certificate expires on: 29 September 2017

Original certification date: 30 September 2014

Certificate No. 0K30171 Version N, Revision date: 30 September 2014

Certification Authority

■ OHSAS 18001:2007 ■

CERTIFICATES

RECOGNITION FOR
BV MODE II SCHEME

DAEHEUNG IND. CO., LTD.
GIMHAE (Gyeongnam) - KOREA (REPUBLIC OF)

■ BV TYPE APPROVAL ■

ABS

CERTIFICATE OF
FORGING FACILITY AND
PROCESS APPROVAL

This is to certify that a representative of ABS did, at the request of
Dae Heung Industry Co., Ltd., Kyungnam, Korea

Steel Forgings for Marine Applications

ISSUE DATE 24 Jul 13 EXPIRATION DATE 23 Jul 18

■ ABS TYPE APPROVAL ■

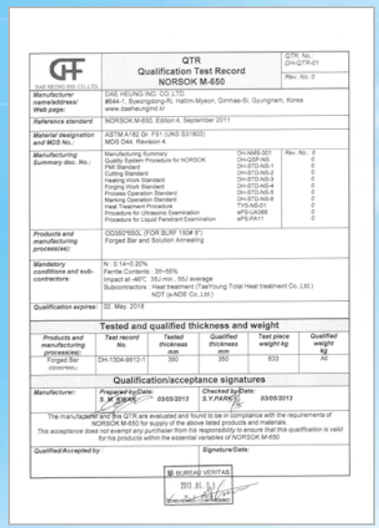

QTR
Qualification Test Record
NORSOK M-650

Tested and qualified thickness and weight

Qualification/acceptance signatures

■ NORSOK M650 CERTIFICATE ■

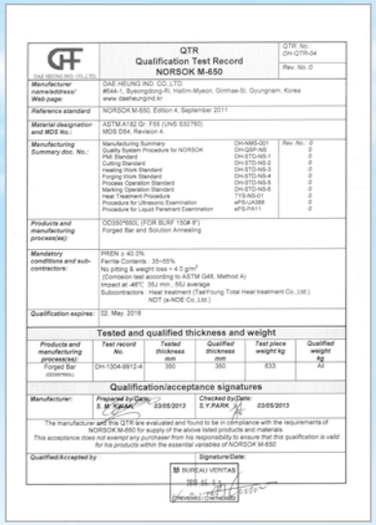

QTR
Qualification Test Record
NORSOK M-650

Tested and qualified thickness and weight

Qualification/acceptance signatures

■ NORSOK M650 CERTIFICATE ■

APPROVAL CERTIFICATE FOR
MANUFACTURING PROCESS

Certificate No. : CWN20681-SF001 Initial Approval : 13th May, 2008.

Product : Steel Forgings

Manufacturer : Dae Heung Ind. Co., Ltd.
644-1, Byeongdong-ri, Hallim-myeon, Gimhae-si, Gyeongnam, Korea

Product Description : Carbon, Low Alloy and Stainless Steel forgings

THIS IS TO CERTIFY that the manufacturing process for the above mentioned product has been approved in accordance with the relevant requirement of this Society's Rules and / or of the recognized standards as follows and entered in the "List of Approved Manufacturer and Type Approved Equipment".
Pt. 2, Ch. 1, Sec. 6, Art. 601 & 602 of the Rules for Classification of Steel Ships.

This Certificate is valid until 12th May, 2018.
Issued at Busan, Korea on 30th August, 2013.

KOREAN REGISTER OF SHIPPING

■ KR TYPE APPROVAL ■

CERTIFICATE OF APPROVAL OF MANUFACTURERS OF
MATERIALS
No. FAB414611PU

This is to certify that the manufacture of the product identified below is in compliance with the applicable requirements of the RINA Rules for the Approval of Manufacturers of Materials.

Description	Steel forgings for machinery
Type	Steel forgings max. weight 5000 kg
Manufacturer	DAE HEUNG IND. CO., LTD.
Place of manufacture	644-1 BYEONGDONG-RI, HALLIM-MYEON 621-873 GIMHAE-SI, GYEONGNAM REPUBLIC OF KOREA
Reference standards	RINA Rules for the approval of manufacturers of materials

Issued in BUSAN on August 2, 2013. This Certificate is valid until July 28, 2018

RINA
Dong-Hun Lee

This certificate consists of this page and 1 enclosure

■ RINA TYPE APPROVAL ■

شركة البترول الوطنية الكويتية
KNPC
VENDORS & CONTRACTORS EVALUATION COMMITTEE

M/s. DAEHEUNG IND.CO. LTD., S.KOREA.,
1635-11, BONGLEONG-DONG,
GANGSEO-GU, BUSAN,
REPUBLIC OF KOREA

DATE: 21-APRIL-2015
REF: V/C-V 4782-15-0350L
FILE NO: V 4782

SUB/RECT: VENDOR APPROVAL -REISSUE

GENTLEMEN,

REFERENCE TO YOUR REQUEST LETTER DATED 20/04/2015, YOUR COMPANY IS APPROVED AS A VENDOR EFFECTIVE 23/10/2011 FOR THE SUPPLY OF THE FOLLOWING PRODUCT(S) FOR K.N.P.C. REFINERIES.

PRODUCT DESCRIPTION
14 60 FLANGES

THE COMPANY (VENDOR) CODE ALLOCATED TO YOUR COMPANY IS 277165

PLEASE ENSURE TO QUOTE THIS CODE AND ABOVE FILE NO. ON ALL YOUR FUTURE CORRESPONDENCE

VERY TRULY YOURS,

DUSAMA H. SHAKMAH
CHAIRMAN - V & CEC

SIA/ MF / BF

CC: M/s. ABDULLA AL-SAYID RAJAB AL-RIFAI & SONS G. T. & C. CO.,CODE# 558059
LOCAL AGENCY CERTIFICATE IS VALID UPTO 16/08/2016.

NOTE: THIS LETTER SUPERSEDES OUR LETTER DT. 23/10/2011

APPROVAL VALIDITY IS UPTO : 22/10/2016

PLEASE REFER OVERLEAF FOR INSTRUCTIONS

■ KNPC ■

TO: M/s. Dae Heung Ind. Co. Ltd.
South Korea
Fax No. 0082 55 310 6740

Date : 15th May 2012
Msg. No.: PQAN/005/2012
Total No. of Pages: 1

FROM: Team Leader Purchasing II,
Commercial Affairs Group
P.O. Box – 9758, 43008 Ahmadi, Kuwait
Fax No. : (965) 2398 0677

SUBJECT: NOTIFICATION OF VENDOR APPROVAL

OUR REF.: VEC-3627/FL/032/2012

Dear Sirs,

We are pleased to inform you that you have been approved for inclusion in KOC's Approved List of Manufacturer for the product category and manufacturing facility mentioned hereunder.

PRODUCT CATEGORY : FLANGES

FACILITY ADDRESS: M/s. DAE HEUNG INDUSTRIAL CO. LTD.
#644-1, BYEONG DOO-RI,
HALLIN – MYEON, GINTAE SI, GYEONGSANGNAN - DO,
ZIP CODE: 621 – 873
SOUTH KOREA.

Validity: From 15th May 2012 to 14th May 2017 (5 years)

This notification of approval is issued subject to the following, failing which liable for cancellation at any time at the discretion of KOC:

- To update regularly with the latest product catalogue / information.
- To furnish Budgetary Quotations as & when requested.
- To furnish Audited financial details for every two years.
- To update with latest contact details / Change in Local Agent.
- To update with Name Change / Merging / Factory Shifting.
- To submit request for Re-Qualification (if required) 3 months prior the above expiry date.

Sincerely,
For Kuwait Oil Company

Jassim Mohd. Al-Fares
cc: M/s Abdulla Sayd Rajab Al-Rifai & Sons Co. Kuwait, Fax - 2243 277

■ KOC ■

CERTIFICATES

■ SABIC ■

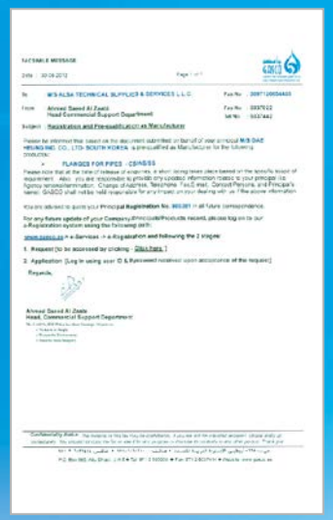

■ GASCO ■

■ NIGC ■

■ TAKREER ■

■ ADEWA ■

■ JQS ■

History

1983.	07	Established the Company in Busan Korea
1984.	01	Started producing forged flanges
1992.	12	Registered in Daewoo Shipbuilding & Marine Engineering Co., Ltd.
1993.	07	Certified Dae–Heung Flanges' quality by Korea Gas Corporation
1994.	01	Tender accepted by Korea Electric Power Corporation
	02	Registered in Hyundai Heavy Ind. Co., Ltd.
		Registered in KPC(KOHAP Petrochemical Co., Ltd)
1998.	02	Registered in Daelim Industrial Co., Ltd.
	07	Certified by ISO9002–BVQI
	08	Changed company name to Dae–Heung Industries Co., Ltd.
2003.	09	Certified by ISO9001–BVQI
2004.	10	Registered in Samsung Heavy Industries Co., Ltd
2006.	02	Founded Dae–Heung Forging in Busan, Korea
	04	Certified by ISO14001–BVQI
	04	Registered in Doosan Heavy Industries & Construction
2007.	04	Certified by Lloyd's Register
		Certified by KEPIC–MN, SN
	06.~	Certified by BV, DNV, ABS, NK, GL, KR Register
	11	Obtained the Certificate of CE MARK
		Founded Forging R&D Center.
2008.	03	Registered in Saudi Arabia Basic Judustries Corporation
	05	Registered in GS Caltex
	12	Certified by promising Export Firm
2009.	04	Registered in Materials Components Company
2010.	05	Certified by (INNO–BIZ)
2010.	05	Certified by Achilles JQS
2010.	07	Registered in Abu Dhabi Gas Liquefaction Company. Ltd
2010.	10	Registered in Doosan Engineering & Construction
2011.	01	Builded ERP System
2011.	02	Moved new factory in Gimhae, Korea
2011.	05	Certified by ISO 9001, 14001
2011.	10	Registered in KNPC
2012.	05	Registered in GASCO
2012.	05	Registered in KOC
2012.	12	Registered in N.I.G.C
2013.	05	Certified by NORSOK M–650
2014.	07	Registered in PDO
2014.	09	Certified by OHSAS 18001
2016.	05	Certified by KS

Forging Factory

Ring Rolling Mill (Ø1650)

2 Ton Air-Hammer

1500 Ton Press

Heat Treatment Furnace

Air-Hammer

Manufacturing Process

Total Supply for Heavy Industries, Petro-Chemical & Shipbuilding

Flange Factory

Products

Lathe Room

CONTENTS

A MESSAGE FROM THE PRESIDENST
HISTORY
FORGING & FLANGES FACTORY (8, 9)

ASME / ANSI FLANGES
CLASS 150 FLANGES (12)
CLASS 300 FLANGES (14)
CLASS 400 FLANGES (16)
CLASS 600 FLANGES (18)
CLASS 900 FLANGES (20)
CLASS 1500 FLANGES (22)
CLASS 2500 FLANGES (24)

RING JOINT FLANGES
CLASS 150 FLANGES (27)
CLASS 300,400,600 FLANGES (28)
CLASS 900 FLANGES (29)
CLASS 1500 FLANGES (30)
CLASS 2500 FLANGES (31)

REDUCING FLANGES (32)

ORIFICE FLANGES
ANSI ORIFICE FLANGE (35)
CLASS 300 ORIFICE FLANGES (36)
CLASS 400 ORIFICE FLANGES (38)
CLASS 600 ORIFICE FLANGES (40)
CLASS 900,1500 ORIFICE FLANGES (42)
CLASS 2500 ORIFICE FLANGES (44)

LONG WELDING NECKS FLANGES
CLASS 150 FLANGES (46)
CLASS 300 FLANGES (46)
CLASS 400 FLANGES (47)
CLASS 600 FLANGES (47)
CLASS 900 FLANGES (48)
CLASS 1500 FLANGES (48)
CLASS 2500 FLANGES (49)
STANDARD FINISH (50) / TOLERANCE (51)
FLANGES FACINGS (52) / THREAD (54)
WELDED & SEAMLESS PIPE CARBON & ALLOY, STAINLESS STEELS (56)
MATERIAL GRADE (58) / WELDING ENDS (59)

ANSI / ASME B16,47 SERIES B FLANGES (API 605)
CLASS 75, 150 FLANGES (61)
CLASS300, 400 FLANGES (62)
CLASS600, 900 FLANGES (62)

ANSI / ASME B16,47 SERIES A FLANGES (MSS SP44)
CLASS 150 FLANGES (64)
CLASS 300 FLANGES (66)
CLASS 400 FLANGES (68)
CLASS 600 FLANGES (70)
CLASS 900 FLANGES (72)

AWWA FLANGES
GENERAL SPECIFICATIONS (75)
CLASS B & D FLANGES TABLE 2 (76)
CLASS B & D FLANGES TABLE 3 (77)
CLASS E FLANGES TABLE 4 (78)

ANSI / ASME B16.48 STEEL LINE BLANKS (API STANDARD 590)
CLASS 150,300 FIGURE 8 BLANKS (80) CLASS 600,900 FIGURE 8 BLANKS (81)
CLASS 1500,2500 FIGURE 8 BLANKS (82) CLASS 150 SPACER AND BLANKS (83)
CLASS 300 SPACER AND BLANKS (84)

DIN FLANGES
6-BAR(DIN 2573, 2527, 2631) (86)
10-BAR(DIN 2576, 2527, 2632) (87)
16-BAR(DIN 2543, 2527, 2633) (88)
25-BAR(DIN 2544, 2527, 2634) (89)
40-BAR(DIN 2545, 2527, 2635) (90)

JIS & KS FLANGES
CLASS 5K FLANGES (92) CLASS 10K FLANGES (93)
CLASS 16K FLANGES (94) CLASS 20K FLANGES (95)
CLASS 30K FLANGES (96) CLASS 40Kg/cm² FLANGES (97)
CLASS 210Kgf/cm² FLANGE FOR OIL PRESSURE (98)
CLASS 280Kgf/cm² FLANGE FOR OIL PRESSURE (99)
CLASS 350Kgf/cm² FLANGE FOR OIL PRESSURE (99)
TOLERANCE FOR PIPE FLANGES (100)

STANDARD MARKING (101)

NOMINAL WALL TICKNESS (106)

COMPARISION FLANGE BORES OF WELDING NECK FLANGE FOR ANSI WITH JIS (107)

ANSI/ASME FLANGES

Class 150 Flanges
Class 300 Flanges
Class 400 Flanges
Class 600 Flanges
Class 900 Flanges
Class 1500 Flanges
Class 2500 Flanges

CLASS 150 FLANGES

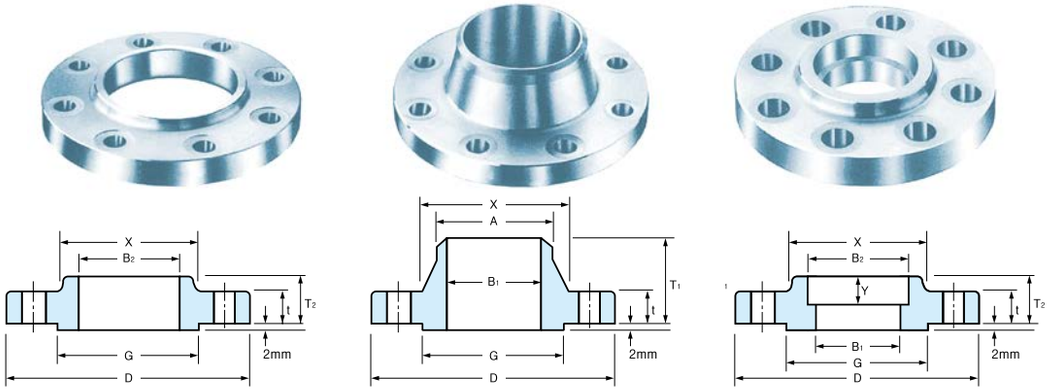

SLIP-ON WELDING NECK SOCKET WELDING

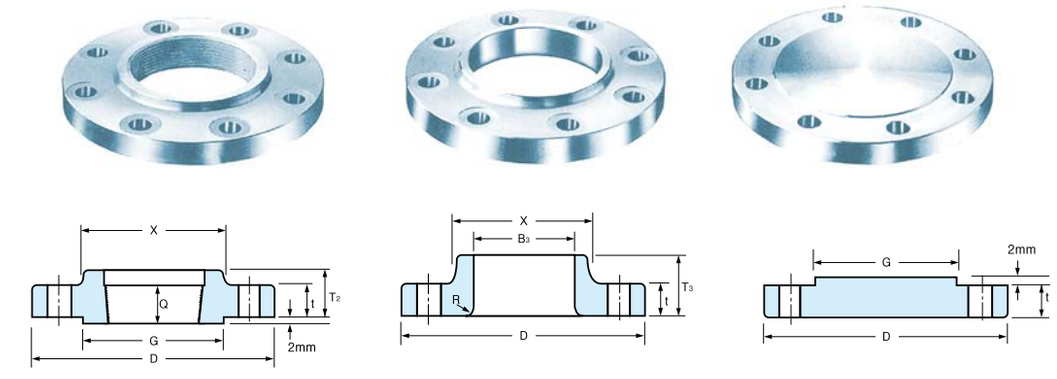

THREADED LAP JOINT BLIND

(Class 150 flanges made without counterbore) (* t = t + 1.6mm)

ASME B16.5 FORGED FLANGES

Unit : mm

Nominal Pipe Size	Outside Diam.	Diam. at Base of Hub	O. D. of Raised Face	Thick-ness	BORE			LENGTH THRU HUB			Diam. of Hub at Bevel	Radius of Lap Joint	Thread Length
					Welding Neck Socket Welding	Slip-on Socket Welding	Lap Joint	Welding Neck	Slip-on Threaded Socket Welding	Lap Joint			
	D	X	G	t	B_1	B_2	B_3	T_1	T_2	T_3	A	R	Q
1/2	89	30.2	35.1	9.7	15.7	22.4	22.9	45.9	14.1	15.7	21.3	3.0	15.7
3/4	99	38.1	42.9	11.2	20.8	27.7	28.2	50.7	14.1	15.7	26.7	3.0	15.7
1	108	49.3	50.8	12.7	26.7	34.5	35.1	53.8	15.7	17.5	33.5	3.0	17.5
1 1/4	117	58.7	63.5	14.2	35.1	43.2	43.7	55.6	19.0	20.6	42.2	4.8	20.6
1 1/2	127	65.0	73.2	15.7	40.9	49.5	50.0	60.4	20.5	22.4	48.3	6.4	22.4
2	152	77.7	91.9	17.5	52.6	62.0	62.5	61.9	23.8	25.4	60.5	7.9	25.4
2 1/2	178	90.4	104.6	20.6	62.7	74.7	75.4	68.3	26.8	28.4	73.2	7.9	28.4
3	191	108.0	127.0	22.4	78.0	90.7	91.4	68.3	28.4	30.2	88.9	9.7	30.2
3 1/2	216	122.2	139.7	22.4	90.2	103.4	104.1	69.8	30.2	31.8	101.6	9.7	31.8
4	229	134.9	157.2	22.4	102.4	116.1	116.8	74.6	31.7	33.3	114.3	11.2	33.3
5	254	163.6	185.7	22.4	128.3	143.8	144.5	87.3	35.0	36.6	141.2	11.2	36.6
6	279	192.0	215.9	23.9	154.2	170.7	171.5	87.3	38.0	39.6	168.4	12.7	39.6
8	343	246.1	269.7	26.9	202.7	221.5	222.3	100.0	42.9	44.5	219.2	12.7	44.5
10	406	304.8	323.9	28.4	254.5	276.4	277.4	100.0	47.7	49.3	273.1	12.7	49.3
12	483	365.3	381.0	30.2	304.8	327.2	328.2	112.7	53.8	55.6	323.9	12.7	55.6
14	533	400.1	412.8	33.3	336.6	359.2	360.2	125.4	55.6	79.2	355.6	12.7	57.2
16	597	457.2	469.9	35.1	387.4	410.5	411.2	125.4	61.9	87.4	406.4	12.7	63.5
18	635	505.0	533.4	38.1	438.2	461.8	462.3	138.1	66.5	96.8	457.2	12.7	68.3
20	699	558.8	584.2	41.1	489.0	513.1	514.4	142.7	71.3	103.1	508.0	12.7	73.2
24	813	663.4	692.2	46.1	590.6	616.0	616.0	150.8	81.0	111.3	609.6	12.7	82.6

Unit : mm

Nominal Pipe Size	Depth of Socket	DRILLING			BOLTING				APPROXIMATE WEIGHT									
		Bolt Circle Diam	Number of Holes	Diam of Holes	Diam of Bolts (inch)	Machine Bolt Length	Stud Bolt Length		Welding Neck		Slip-on and Threaded		Lap Joint		Blind		Socket Welding	
	Y					Raised Face	Raised Face	Ring Joint	kg	lb	kg	lb	kg	lb	kg	lb	kg	lb
1/2	9.7	60.5	4	15.9	1/2	50.8	57.2	–	0.51	1.10	0.47	1.00	0.51	1.00	0.47	1.00	0.47	1.00
3/4	11.2	69.9	4	15.9	1/2	50.8	63.5	–	0.73	1.60	0.58	1.30	0.64	1.40	0.63	1.40	0.59	1.30
1	12.7	79.2	4	15.9	1/2	57.2	63.5	76.2	1.07	2.40	0.86	1.90	0.93	1.80	0.94	2.10	0.87	1.90
1 1/4	14.2	88.9	4	15.9	1/2	57.2	69.9	82.6	1.40	3.10	1.08	2.40	1.16	2.00	1.23	2.70	1.11	2.40
1 1/2	15.7	98.6	4	15.9	1/2	63.5	69.9	82.6	1.81	4.00	1.41	3.10	1.51	3.30	1.62	3.60	1.45	3.20
2	17.5	120.7	4	19.1	5/8	69.9	82.6	95.3	2.59	5.70	2.26	5.00	2.38	5.20	2.64	5.80	2.33	5.00
2 1/2	19.1	139.7	4	19.1	5/8	76.2	88.9	101.6	4.28	9.40	3.43	7.60	3.60	7.90	4.06	9.00	3.55	7.80
3	20.6	152.4	4	19.1	5/8	76.2	88.9	101.6	5.18	11.40	3.87	8.50	4.04	8.90	4.90	10.80	4.02	8.90
3 1/2	22.4	177.8	8	19.1	5/8	76.2	88.9	101.6	5.45	12.00	4.99	11.00	4.99	11.00	5.90	13.00	4.99	11.00
4	23.9	190.5	8	19.1	5/8	76.2	88.9	101.6	7.32	16.10	5.75	12.70	5.96	13.00	7.41	16.30	5.99	13.20
5	23.9	215.9	8	22.2	3/4	82.6	95.3	108.0	8.91	19.60	6.22	13.70	6.44	14.00	8.76	19.30	6.68	14.70
6	26.9	241.3	8	22.2	3/4	82.6	101.6	114.3	11.26	24.80	7.38	16.30	7.59	16.70	11.31	24.90	7.99	17.60
8	31.8	298.5	8	22.2	3/4	88.9	108.0	120.7	17.68	39.00	12.36	27.30	12.66	27.90	19.92	43.90	13.29	29.30
10	33.3	362.0	12	25.4	7/8	101.6	114.3	127.0	24.79	54.70	17.10	37.70	16.78	37.00	29.39	64.80	19.50	43.00
12	39.6	431.8	12	25.4	7/8	101.6	120.7	133.4	38.98	85.90	27.68	61.00	28.30	62.40	43.70	96.30	29.03	64.00
14	41.4	476.3	12	28.6	1	114.3	133.4	146.1	51.71	114.00	35.20	77.60	41.50	91.50	59.42	140.00	38.56	85.00
16	44.5	539.8	16	28.6	1	114.3	133.4	146.1	64.41	142.00	42.18	93.00	52.98	116.80	77.11	170.00	44.49	98.00
18	49.3	577.9	16	31.8	1 1/8	127.0	146.1	158.8	74.84	165.00	49.71	109.60	59.00	130.00	94.80	209.00	54.43	120.00
20	54.1	635.0	20	31.8	1 1/8	139.7	158.8	171.5	89.36	197.00	65.50	140.00	72.12	159.00	123.38	272.00	70.31	155.00
24	63.5	749.3	20	34.9	1 1/4	152.4	171.5	184.2	119.66	263.80	90.50	199.50	99.02	218.30	188.24	415.00	95.25	210.00

Notes:

(1) For the 'Bore' (B_1) other than Standard Wall Thickness, refer to page 56-57.

(2) For Slip-on, Threaded, Socket Welding and Lap Joint Flanges, the hubs can be shaped either vertical from base to topor tapered within the limits of 7 degrees.

(3) Blind Flanges may be made with the same hub as that used for Slip-on Flanges or without hub.

(4) The gasket surface and backside (bearing surface for bolting) are made parallel within 1 degree. To accomplish parallelism, spot facing is carried out according to MSS SP-9, without reducing thickness (t).

(5) Depth of Socket (Y) is covered by ASME B16.5 only sizes through 3 inch, over 3 inch is at the manufacturer's option.

CLASS 300 FLANGES

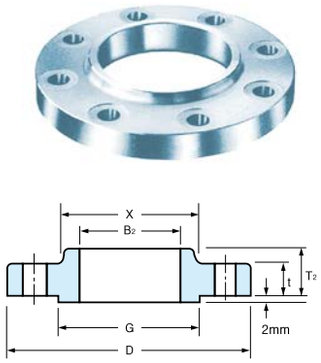

SLIP-ON

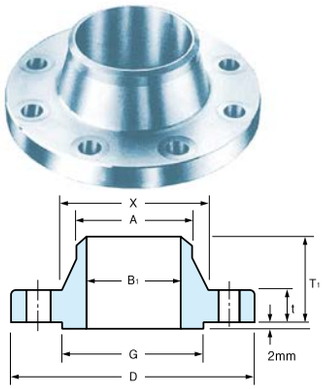

WELDING NECK

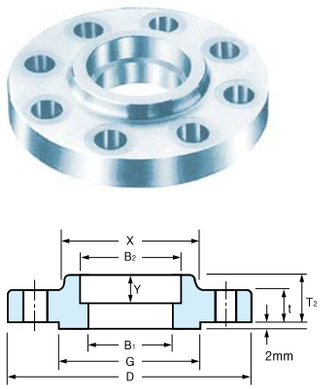

SOCKET WELDING

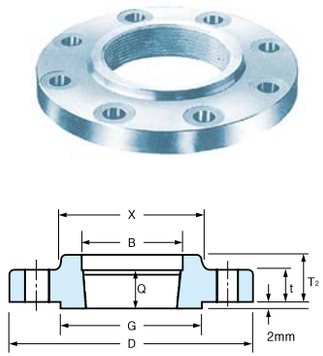

THREADED

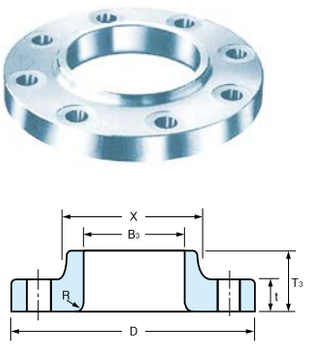

LAP JOINT

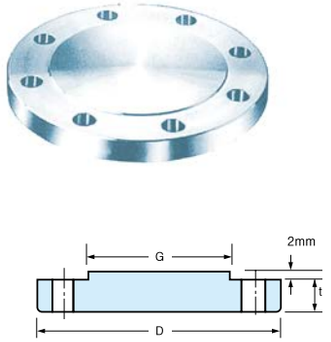

BLIND

Depth of counterbore
- For NPS 2″ : 6.35
- NPS 2½ and large : 9.65
- ½ ≤NPS≤3, ±0.25mm(±0.010″)

(* t = t + 1.6mm)

ASME B16.5 FORGED FLANGES

Unit : mm

Nominal Pipe Size	Outside Diam.	Diam. at Base of Hub	O. D. of Raised Face	Thick-ness	BORE				LENGTH THRU HUB			Diam. of Hub at Bevel	Radius of Lap Joint	Thread Length
					Welding Neck Socket Welding	Slip-on Socket Welding	Lap Joint	Counter Bore Min. Threaded Min.	Welding Neck	Slip-on Threaded Socket Welding	Lap Joint			
	D	X	G	t	B_1	B_2	B_3	B	T_1	T_2	T_3	A	R	Q
1/2	95	38.1	35.1	12.7	15.7	22.4	22.9	23.6	50.7	20.5	22.4	21.3	3.0	15.7
3/4	117	47.8	42.9	14.2	20.8	27.7	28.2	29.0	55.6	23.8	25.4	26.7	3.0	15.7
1	124	53.8	50.8	15.7	26.7	34.5	35.1	35.8	60.4	25.3	26.9	33.5	3.0	17.5
1 1/4	133	63.5	63.5	17.5	35.1	43.2	43.7	44.5	63.4	25.3	26.9	42.2	4.8	20.6
1 1/2	155	69.9	73.2	19.1	40.9	49.5	50.0	50.3	66.7	28.6	30.2	48.3	6.4	22.4
2	165	84.1	91.9	20.6	52.6	62.0	62.5	63.5	68.3	31.7	33.3	60.5	7.9	28.4
2 1/2	191	100.1	104.6	23.9	62.7	74.7	75.4	76.2	74.6	36.5	38.1	73.2	7.9	31.8
3	210	117.3	127.0	26.9	78.0	90.7	91.4	92.2	77.6	41.3	42.9	88.9	9.7	31.8
3 1/2	229	133.4	139.7	28.4	90.2	103.4	104.1	104.9	79.4	42.9	44.5	101.6	9.7	36.6
4	254	146.1	157.2	30.2	102.4	116.1	116.8	117.6	84.3	46.2	47.8	114.3	11.2	36.6
5	279	177.8	185.7	33.3	128.3	143.8	144.5	144.5	97.0	49.2	50.8	141.2	11.2	42.9
6	318	206.2	215.9	35.1	154.2	170.7	171.5	171.5	97.0	50.7	52.3	168.4	12.7	46.0
8	381	260.4	269.7	39.6	202.7	221.5	222.3	222.3	109.7	60.4	62.0	219.2	12.7	50.8
10	445	320.5	323.9	46.0	254.5	276.4	277.4	276.4	115.7	64.9	95.3	273.1	12.7	55.6
12	521	374.7	381.0	49.3	304.8	327.2	328.2	328.7	128.4	71.6	101.6	323.9	12.7	60.5
14	584	425.5	412.8	52.3	336.6	359.2	360.2	360.4	141.1	74.6	111.3	355.6	12.7	63.5
16	648	482.6	469.9	55.6	287.4	410.5	411.2	411.2	144.5	81.0	120.7	406.4	12.7	68.3
18	711	533.4	533.4	58.7	438.2	461.8	462.3	462.0	157.2	87.3	130.0	457.2	12.7	69.9
20	775	587.2	584.2	62.0	489.0	513.1	514.4	512.8	160.5	93.7	139.7	508.0	12.7	73.2
24	914	701.5	692.2	68.3	590.6	616.0	616.0	614.4	166.5	104.8	152.4	609.6	12.7	82.6

Unit : mm

Nominal Pipe Size	Depth of Socket	DRILLING			BOLTING				APPROXIMATE WEIGHT									
		Bolt Circle Diam	Number of Holes	Diam of Holes	Diam of Bolts (inch)	Machine Bolt Length	Stud Bolt Length		Welding Neck		Slip-on and Threaded		Lap Joint		Blind		Socket Welding	
	Y					Raised Face	Raised Face	Ring Joint	kg	lb	kg	lb	kg	lb	kg	lb	kg	lb
1/2	9.7	66.5	4	15.9	1/2	57.2	63.5	76.2	0.78	1.70	0.62	1.40	0.61	1.30	0.62	1.40	0.62	1.40
3/4	11.2	82.6	4	19.1	5/8	63.5	76.2	88.9	1.34	3.00	1.15	2.50	1.15	2.50	1.16	2.50	1.19	2.60
1	12.7	88.9	4	19.1	5/8	63.5	76.2	88.9	1.64	3.60	1.39	3.10	1.38	3.00	1.42	3.00	1.44	3.20
1 1/4	14.2	98.6	4	19.1	5/8	69.9	82.6	95.3	2.06	4.50	1.67	3.70	1.66	3.70	1.79	3.90	1.73	3.80
1 1/2	15.7	114.3	4	22.2	3/4	76.2	88.9	101.6	3.06	6.70	2.53	5.60	2.52	5.60	2.68	5.90	2.62	5.80
2	17.5	127.0	8	19.1	5/8	76.2	88.9	101.6	3.40	7.50	2.80	6.20	2.79	6.20	3.09	6.80	2.94	6.50
2 1/2	19.1	149.4	8	22.2	3/4	82.6	101.6	114.3	5.31	11.70	4.25	9.40	4.22	9.30	4.75	10.50	4.49	9.90
3	20.6	168.1	8	22.2	3/4	88.9	108.0	120.7	7.32	16.10	5.81	12.80	5.78	12.70	6.79	14.90	6.20	13.70
3 1/2	22.4	184.2	8	22.2	3/4	95.3	108.0	127.0	8.17	18.00	7.72	17.00	7.72	17.00	9.53	21.00		
4	23.9	200.2	8	22.2	3/4	95.3	114.3	127.0	11.30	24.90	10.13	22.30	10.07	22.20	12.00	26.50		
5	23.9	235.0	8	22.2	3/4	108.0	120.7	133.4	15.12	33.30	12.58	27.70	12.52	27.60	15.96	35.20		
6	26.9	269.7	12	22.2	3/4	108.0	120.7	139.7	19.68	43.40	16.04	35.40	15.95	35.20	21.20	46.70		
8	31.8	330.2	12	25.4	7/8	120.7	139.7	152.4	30.48	67.20	24.50	54.00	24.37	53.70	34.60	76.30		
10	33.3	387.4	16	28.6	1	139.7	158.8	171.5	43.74	96.40	34.16	75.30	39.92	88.00	55.34	122.00		
12	39.6	450.9	16	31.8	1 1/8	146.1	171.5	184.2	64.41	142.00	51.26	113.00	58.70	129.40	78.90	174.00		
14	41.4	514.4	20	31.8	1 1/8	158.8	177.8	190.5	88.30	194.70	72.12	159.00	83.46	184.00	107.05	236.00		
16	44.5	571.5	20	34.9	1 1/4	165.1	190.5	203.2	112.94	249.00	90.40	199.30	106.14	234.00	139.25	307.00		
18	49.3	628.7	24	34.9	1 1/4	171.5	196.9	209.6	138.34	305.00	109.00	240.30	133.95	295.30	176.90	396.00		
20	54.1	685.8	24	34.9	1 1/4	184.2	203.2	222.3	167.37	369.00	136.00	300.00	157.65	347.60	223.17	492.00		
24	63.5	812.8	24	41.3	1 1/2	203.2	228.6	254.0	235.41	519.00	204.00	449.70	240.40	530.00	342.00	754.00		

Notes:

(1) For the 'Bore' (B_1) other than Standard Wall Thickness, refer to page 56-57.

(2) For Slip-on, Threaded, Socket Welding and Lap Joint Flanges, the hubs can be shaped either vertical from base to or tapered within the limits of 7 degrees.

(3) Blind Flanges may be made with the same hub as that used for Slip-on Flanges or without hub.

(4) The gasket surface and backside (bearing surface for bolting) are made parallel within 1 degree. To accomplish parallelism, spot facing is carried out according to MSS SP-9, without reducing thickness (t).

(5) Depth of Socket (Y) is covered by ASME B16.5 only is sizes through 3 inch, over 3 inch is at the manufacturer's option.

CLASS 400 FLANGES

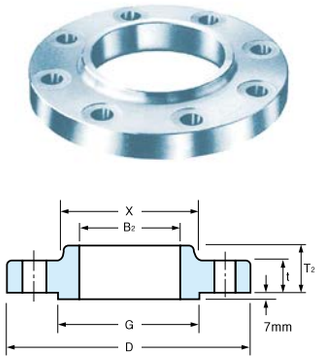

SLIP-ON

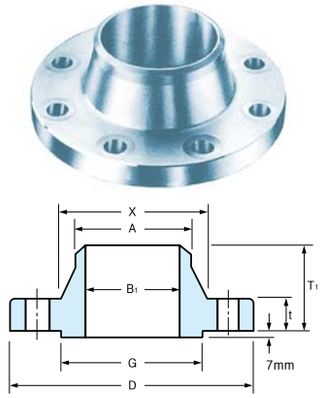

WELDING NECK

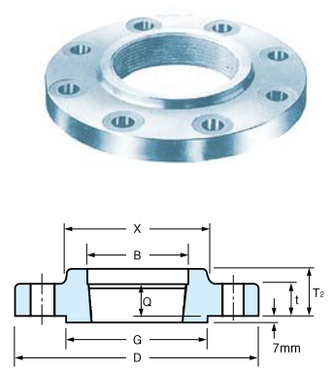

THREADED

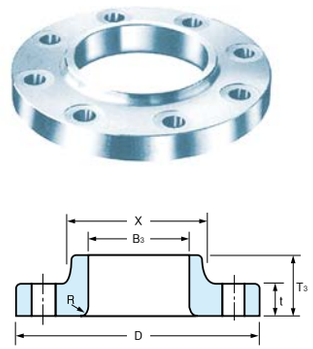

LAP JOINT

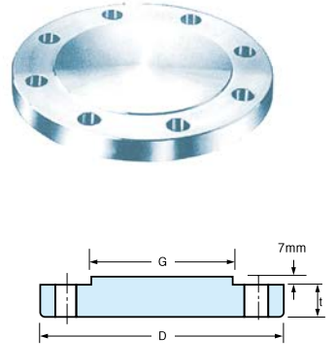

BLIND

Depth of counterbore
- For NPS 2″ : 6.35
- NPS 2½ and large : 9.65
- ½ ≤NPS≤3, ±0.25mm(±0.010″)

ASME B16.5 FORGED FLANGES

Unit : mm

Nominal Pipe Size	Outside Diam.	Diam. at Base of Hub	O. D. of Raised Face	Thick-ness	BORE				LENGTH THRU HUB			Diam. of Hub at Bevel
					Welding Neck Socket Welding	Slip-on Socket Welding	Lap Joint	Counter Bore Min. Threaded Min.	Welding Neck	Slip-on Threaded Socket Welding	Lap Joint	
	D	X	G	t	B_1	B_2	B_3	B	T_1	T_2	T_3	A
1/2	95	38.1	35.1	14.2	See Note(1) To be specified by purchaser.	22.4	22.9	23.6	52.3	22.4	22.4	21.3
3/4	117	47.8	42.9	15.7		27.7	28.2	29.0	57.2	25.4	25.4	26.7
1	124	53.8	50.8	17.5		34.5	35.1	35.8	62.0	26.9	26.9	33.5
1 1/4	133	63.5	63.5	20.6		43.2	43.7	44.5	66.5	28.4	28.4	42.2
1 1/2	155	69.9	73.2	22.4		49.5	50.0	50.5	69.9	31.8	31.8	48.3
2	165	84.1	91.9	25.4		62.0	62.5	63.5	73.2	36.6	36.6	60.5
2 1/2	191	100.1	104.6	28.4		74.7	75.4	76.2	79.2	41.1	41.1	73.2
3	210	117.3	127.0	31.8		90.7	91.4	92.2	82.6	46.0	46.0	88.9
3 1/2	229	133.4	139.7	35.1		103.4	104.1	104.9	85.9	49.3	49.3	101.6
4	254	146.1	157.2	35.1		116.1	116.8	117.6	88.9	50.8	50.8	114.3
5	279	177.8	185.7	38.1		143.8	144.5	144.5	101.6	53.8	53.8	141.2
6	318	206.2	215.9	41.1		170.7	171.5	171.5	103.1	57.2	57.2	168.4
8	381	260.4	269.7	47.8		221.5	222.3	222.3	117.3	68.3	68.3	219.2
10	445	320.5	323.9	53.8		276.4	277.4	276.4	124.0	73.2	101.6	273.1
12	521	374.7	381.0	57.2		327.2	328.2	328.7	136.7	79.2	108.0	323.9
14	584	425.5	412.8	60.5		359.2	360.2	360.4	149.4	84.1	117.3	355.6
16	648	482.6	469.9	63.5		410.5	411.2	411.2	152.4	93.7	127.0	406.4
18	711	533.4	533.4	66.5		461.8	462.3	462.0	165.1	98.6	136.7	457.2
20	775	587.2	584.2	69.9		513.1	514.4	512.8	168.1	101.6	146.1	508.0
24	914	701.5	692.2	76.2		616.0	616.0	614.4	174.8	114.3	158.8	609.6

Unit : mm

Nominal Pipe Size	Radius of Lap Joint	Thread Length	DRILLING			BOLTING Stud Bolt Length				APPROXIMATE WEIGHT							
			Bolt Circle Diam	Number of Holes	Diam of Holes	Diam of Bolts (inch)	Raised Face	Male-Female Tongue-Groove	Ring Joint	Welding Neck		Slip-on and Threaded		Lap Joint		Blind	
	R	Q								kg	lb	kg	lb	kg	lb	kg	lb
1/2	3.0	15.7	66.5	4	15.9	1/2	76.2	69.9	76.2	1.36	3.00	0.91	2.00	0.80	1.80	0.91	2.00
3/4	3.0	15.7	82.6	4	19.1	5/8	88.9	82.6	88.9	1.59	3.50	1.36	3.00	1.36	3.00	1.40	3.00
1	3.0	17.5	88.9	4	19.1	5/8	88.9	82.6	88.9	1.81	4.00	1.59	3.50	1.59	3.50	1.70	3.80
1 1/4	4.8	20.6	98.6	4	19.1	5/8	95.3	88.9	95.3	2.50	5.50	2.10	4.60	2.04	4.50	2.27	5.00
1 1/2	6.4	22.4	114.3	4	22.2	3/4	108.0	101.6	108.0	3.63	8.00	3.10	6.80	2.95	6.50	3.40	7.50
2	7.9	28.4	127.0	8	19.1	5/8	108.0	101.6	108.0	4.54	10.00	3.63	8.00	3.63	8.00	4.40	9.70
2 1/2	7.9	31.8	149.4	8	22.2	3/4	120.7	114.3	120.7	6.35	14.00	5.44	12.00	4.99	11.00	6.80	15.00
3	9.7	35.1	168.1	8	22.2	3/4	127.0	120.7	127.0	8.17	18.00	7.26	16.00	6.35	14.00	8.90	19.60
3 1/2	9.7	39.6	184.2	8	25.4	7/8	139.7	133.4	139.7	11.80	26.00	9.53	21.00	9.08	20.00	13.17	29.00
4	11.2	36.6	200.2	8	25.4	7/8	139.7	133.4	139.7	13.61	30.00	10.89	24.00	9.98	22.00	14.40	31.70
5	11.2	42.9	235.0	8	25.4	7/8	146.1	133.4	146.1	17.69	39.00	14.07	31.00	13.15	29.00	19.50	43.00
6	12.7	46.0	269.7	12	25.4	7/8	152.4	146.1	152.4	22.23	49.00	19.98	44.00	16.78	37.00	27.67	61.00
8	12.7	50.8	330.2	12	28.4	1	171.5	165.1	171.5	35.38	78.00	30.40	67.00	26.16	59.00	45.36	100.00
10	12.7	55.6	387.4	16	31.8	1 1/8	190.5	184.2	190.5	49.89	110.00	41.28	91.00	43.09	95.00	68.00	150.00
12	12.7	60.5	450.9	16	34.9	1 1/4	203.2	196.9	203.2	72.57	160.00	59.02	130.00	68.95	152.00	98.00	216.00
14	12.7	63.5	514.4	20	34.9	1 1/4	209.6	203.2	209.6	105.69	233.00	81.72	180.00	95.25	210.00	131.66	290.00
16	12.7	68.3	571.5	20	38.1	1 3/8	222.3	215.9	222.3	133.30	294.00	106.69	235.00	127.00	280.00	167.00	368.00
18	12.7	69.9	628.7	24	38.1	1 3/8	228.6	222.3	228.6	158.90	350.30	129.39	285.30	156.49	345.00	206.57	455.40
20	12.7	73.2	685.8	24	41.3	1 1/2	241.3	235.0	247.7	193.00	425.50	152.00	335.00	190.51	420.00	261.00	575.40
24	12.7	82.6	812.8	24	47.6	1 3/4	266.7	260.4	279.4	281.48	620.50	231.54	510.50	278.96	615.00	395.00	870.80

Notes:

(1) For the inside diameter of pipes (corresponding to 'Bore' (B_1) of Welding Neck Flanges), refer to page 56-57.

(2) For Slip-on, Threaded and Lap Joint Flanges, the hubs can be shaped either vertical from base to top or tapered within the limits of 7 degrees.

(3) Blind Flanges may be made with the same hub as that used for Slip-on Flanges or without hub.

(4) The gasket surface and backside (bearing surface for bolting) are made parallel within 1 degree. To accomplish parallelism, spot facing is carried out according to MSS SP-9, without reducing thickness (t).

(5) Dimensions of sizes ½″ through 3-1/2″ are the same as for Class 600 Flanges

CLASS 600 FLANGES

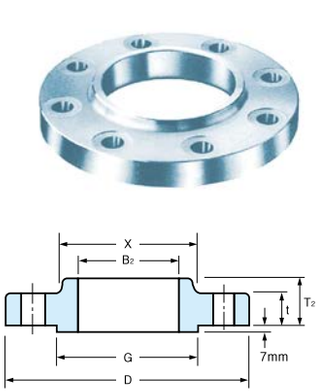

SLIP-ON

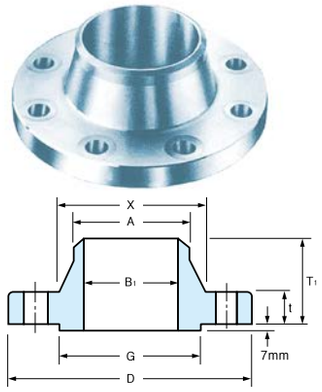

WELDING NECK

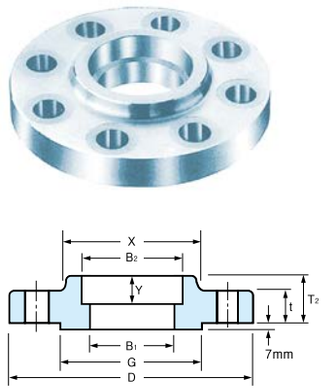

SOCKET WELDING

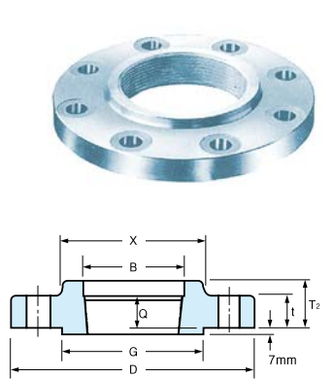

THREADED

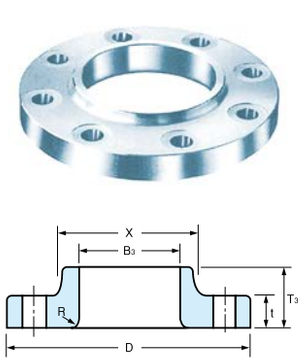

LAP JOINT

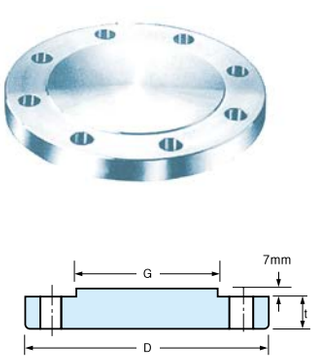

BLIND

ASME B16.5 FORGED FLANGES

Unit : mm

Nominal Pipe Size	Outside Diam.	Diam. at Base of Hub	O. D. of Raised Face	Thick-ness	BORE				LENGTH THRU HUB			Diam. of Hub at Bevel	Radius of Lap Joint	Thread Length
					Welding Neck Socket Welding	Slip-on Socket Welding	Lap Joint	Counter Bore Min. Threaded Min.	Welding Neck	Slip-on Threaded Socket Welding	Lap Joint			
	D	X	G	t	B_1	B_2	B_3	B	T_1	T_2	T_3	A	R	Q
1/2	95	38.1	35.1	14.2	See Note(1) To be specified by purchaser.	22.4	22.9	23.6	52.3	22.4	22.4	21.3	3.0	15.7
3/4	117	47.8	42.9	15.7		27.7	28.2	29.0	57.2	25.4	25.4	26.7	3.0	15.7
1	124	53.8	50.8	17.5		34.5	35.1	35.8	62.0	26.9	26.9	33.5	3.0	17.5
1 1/4	133	63.5	63.5	20.6		43.2	43.7	44.5	66.5	28.4	28.4	42.2	4.8	20.6
1 1/2	155	69.9	73.2	22.4		49.5	50.0	50.5	69.9	31.8	31.8	48.3	6.4	22.4
2	165	84.1	91.9	25.4		62.0	62.5	63.5	73.2	36.6	36.6	60.5	7.9	28.4
2 1/2	191	100.1	104.6	28.4		74.7	75.4	76.2	79.2	41.1	41.1	73.2	7.9	31.8
3	210	117.3	127.0	31.8		90.7	91.4	92.2	82.6	46.0	46.0	88.9	9.7	35.1
3 1/2	229	133.4	139.7	35.1		103.4	104.1	104.9	85.9	49.3	49.3	101.6	9.7	39.6
4	273	152.4	157.2	38.1		116.1	116.8	117.6	101.6	53.8	53.8	114.3	11.2	41.1
5	330	189.0	185.7	44.5		143.8	144.5	144.5	114.3	60.5	60.5	141.2	11.2	47.8
6	356	222.3	215.9	47.8		170.7	171.5	171.5	117.3	66.5	66.5	168.4	12.7	50.8
8	419	273.1	269.7	55.6		221.5	222.3	222.3	133.4	76.2	76.2	219.2	12.7	57.2
10	508	342.9	323.9	63.5		276.4	277.4	276.4	152.4	85.9	111.3	273.1	12.7	65.0
12	559	400.1	381.0	66.5		327.2	328.2	328.7	155.4	91.9	117.3	323.9	12.7	69.9
14	603	431.8	412.8	69.9		359.2	360.2	360.4	165.1	93.7	127.0	355.6	12.7	73.2
16	686	495.3	469.9	76.2		410.5	411.2	411.2	177.8	106.4	139.7	406.4	12.7	77.7
18	743	546.1	533.4	82.6		461.8	462.3	462.0	184.2	117.3	152.4	457.2	12.7	79.2
20	813	609.6	584.2	88.9		513.1	514.4	512.8	190.5	127.0	165.1	508.0	12.7	82.6
24	940	717.6	692.2	101.6		616.0	616.0	614.4	203.2	139.7	184.2	609.6	12.7	91.9

Depth of counterbore
- For NPS 2″ : 6.35
- NPS 2 1/2 and large : 9.65
- 1/2 ≤NPS≤3, ±0.25mm(±0.010″)

Unit : mm

Nominal Pipe Size	Depth of Socket	DRILLING			BOLTING				APPROXIMATE WEIGHT									
		Bolt Circle Diam	Number of Holes	Diam of Holes	Diam of Bolts (inch)	Stud Bolt Length: Raised Face	Male-Female Tongue-Groove	Ring Joint	Welding Neck		Slip-on and Threaded		Lap Joint		Blind		Socket Welding	
	Y								kg	lb	kg	lb	kg	lb	kg	lb	kg	lb
1/2	9.7	66.5	4	15.9	1/2	76.2	69.9	76.2	0.90	2.00	0.91	2.00	0.80	1.80	0.91	2.00	0.91	2.00
3/4	11.2	82.6	4	19.1	5/8	88.9	82.6	88.9	1.59	3.50	1.40	3.00	1.36	3.00	1.40	3.00	1.36	3.00
1	12.7	88.9	4	19.1	5/8	88.9	82.6	88.9	1.90	4.00	1.70	3.70	1.59	3.50	1.81	4.00	1.81	4.00
1 1/4	14.2	98.6	4	19.1	5/8	95.3	88.9	95.3	2.49	5.50	2.27	5.00	2.04	4.50	2.40	5.30	2.60	5.70
1 1/2	15.7	114.3	4	22.2	3/4	108.0	101.6	108.0	3.63	8.00	3.10	6.80	2.95	6.50	3.40	7.50	3.18	7.00
2	17.5	127.0	8	19.1	5/8	108.0	101.6	108.0	4.54	10.00	3.63	8.00	3.63	8.00	4.40	9.70	3.90	8.60
2 1/2	19.1	149.4	8	22.2	3/4	120.7	114.3	120.7	6.35	14.00	5.44	12.00	4.99	11.00	6.80	15.00	5.90	13.00
3	20.6	168.1	8	22.2	3/4	127.0	120.7	127.0	8.16	18.00	7.26	16.00	6.35	14.00	8.90	19.60	7.40	16.30
3 1/2	22.4	184.2	8	25.4	7/8	139.7	133.4	139.7	11.80	26.00	9.53	21.00	9.08	20.00	13.17	29.00		
4	23.9	215.9	8	25.4	7/8	146.1	139.7	146.1	16.78	37.00	14.97	33.00	14.06	31.00	18.60	41.00		
5	23.9	266.7	8	28.6	1	165.1	158.8	165.1	30.87	68.00	28.50	62.80	27.50	60.60	30.84	68.00		
6	26.9	292.1	12	28.6	1	171.5	165.1	171.5	36.77	80.00	36.32	80.00	35.38	78.00	38.00	83.80		
8	31.8	349.3	12	31.8	1 1/8	190.5	184.2	196.9	50.80	112.00	44.00	97.00	50.80	112.00	62.20	137.00		
10	33.3	431.8	16	34.9	1 1/4	215.9	209.6	215.9	86.26	190.00	76.20	168.00	74.00	163.00	102.00	224.90		
12	39.6	489.0	20	34.9	1 1/4	222.3	215.9	222.3	102.51	226.00	97.52	215.00	108.86	240.00	132.00	291.00		
14	41.4	527.1	20	38.1	1 3/8	235.0	228.6	235.0	121.56	268.00	102.00	224.80	111.00	244.70	158.00	348.30		
16	44.5	603.3	20	41.3	1 1/2	254.0	247.7	254.0	177.06	290.00	147.82	330.20	165.71	365.30	224.73	495.40		
18	49.3	654.1	20	44.5	1 5/8	273.1	266.7	273.1	215.65	475.40	180.10	412.30	194.00	427.70	285.00	628.30		
20	54.1	723.9	24	44.5	1 5/8	285.8	279.4	292.1	267.86	590.50	231.54	510.50	258.78	570.50	365.00	804.70		
24	63.5	838.2	24	50.8	1 7/8	330.2	323.9	336.6	372.00	820.00	330.00	725.50	362.00	798.00	533.45	1176.0		

Notes:

(1) For the inside diameter of pipes (corresponding to 'Bore' (B_1) of Welding Neck Flanges), refer to page 56-57.

(2) For Slip-on, Threaded, Lap Joint and Socket Welding Flanges, the hubs can be shaped either vertical from base to top or tapered within the limits of 7 degrees.

(3) Blind Flanges may be made with the same hub as that used for Slip-on Flanges or without hub.

(4) The gasket surface and backside (bearing surface for bolting) are made parallel within 1 degree. To accomplish parallelism, spot facing is carried out according to MSS SP-9, without reducing thickness (t).

(5) Dimensions of sizes 1/2″ through 3-1/2″ are the same as for Class 400 Flanges

(6) Depth of Socket (Y) is covered by ASME B16.5 only in sizes through 3 inch, over 3 inch is at the manufacturer's option.s

CLASS 900 FLANGES

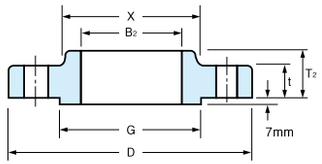

SLIP–ON

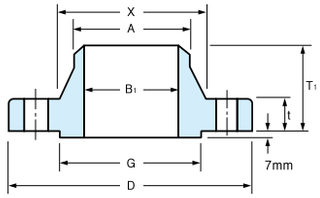

WELDING NECK

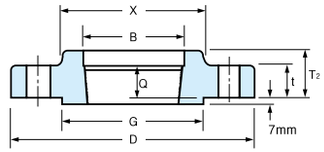

THREADED

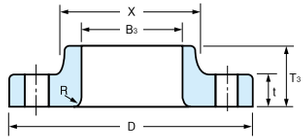

LAP JOINT

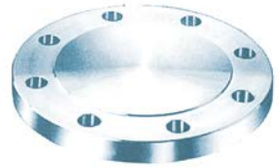

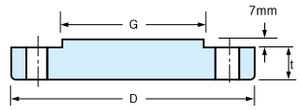

BLIND

Depth of counterbore
- For NPS 2″ : 6.35
- NPS 2½ and large : 9.65
- ½ ≤NPS≤3, ±0.25mm(±0.010″)

ASME B16.5 FORGED FLANGES

Unit : mm

Nominal Pipe Size	Outside Diam.	Diam. at Base of Hub	O. D. of Raised Face	Thick-ness	BORE				LENGTH THRU HUB			Diam. of Hub at Bevel
					Welding Neck Socket Welding	Slip-on Socket Welding	Lap Joint	Counter Bore Min. Threaded Min.	Welding Neck	Slip-on Threaded Socket Welding	Lap Joint	
	D	X	G	t	B_1	B_2	B_3	B	T_1	T_2	T_3	A
1/2	121	38.1	35.1	22.4	See Note(1) To be specified by purchaser.	22.4	22.9	23.6	60.5	31.8	31.8	21.3
3/4	130	44.5	42.9	25.4		27.7	28.2	29.0	69.9	35.1	35.1	26.7
1	149	52.3	50.8	28.4		34.5	35.1	35.8	73.2	41.1	41.1	33.5
1 1/4	159	63.5	63.5	28.4		43.2	43.7	44.5	73.2	41.1	41.1	42.2
1 1/2	178	69.9	73.2	31.8		49.5	50.0	50.5	82.6	44.5	44.5	48.3
2	216	104.6	91.9	38.1		62.0	62.5	63.5	101.6	57.2	57.2	60.5
2 1/2	244	124.0	104.6	41.1		74.7	75.4	76.2	104.6	63.5	63.5	73.2
3	241	127.0	127.0	38.1		90.7	91.4	92.2	101.6	53.8	53.8	88.9
4	292	158.8	157.2	44.5		116.1	116.8	117.6	114.3	69.9	69.9	114.3
5	349	190.5	185.7	50.8		143.8	144.5	144.5	127.0	79.2	79.2	141.2
6	381	235.0	215.9	55.6		170.7	171.5	171.5	139.7	85.9	85.9	168.4
8	470	298.5	269.7	63.5		221.5	222.3	222.3	162.1	101.6	114.3	219.2
10	546	368.3	323.9	69.9		276.4	277.4	276.4	184.2	108.0	127.0	273.1
12	610	419.1	381.0	79.2		327.2	328.2	328.7	200.2	117.3	142.7	323.9
14	641	450.9	412.8	85.9		359.2	360.2	360.4	212.9	130.0	155.4	355.6
16	705	508.0	469.9	88.9		410.5	411.2	411.2	215.9	133.4	165.1	406.4
18	787	565.2	533.4	101.6		461.8	462.3	462.0	228.6	152.4	190.5	457.2
20	857	622.3	584.2	108.0		513.1	514.4	512.8	247.7	158.8	209.6	508.0
24	1041	749.3	692.2	139.7		616.0	616.0	614.4	292.1	203.2	266.7	609.6

Unit : mm

Nominal Pipe Size	Radius of Lap Joint	Thread Length	DRILLING			BOLTING				APPROXIMATE WEIGHT							
							Stud Bolt Length			Welding Neck		Slip-on and Threaded		Lap Joint		Blind	
			Bolt Circle Diam	Number of Holes	Diam of Holes	Diam of Bolts (inch)	Raised Face	Male-Female Tongue-Groove	Ring Joint								
	R	Q								kg	lb	kg	lb	kg	lb	kg	lb
1/2	3.0	22.4	82.6	4	22.2	3/4	108.0	101.6	108.0	2.10	4.60	1.81	4.00	1.81	4.00	1.90	4.20
3/4	3.0	25.4	88.9	4	22.2	3/4	114.3	108.0	114.3	2.72	6.00	2.40	5.30	2.30	5.00	2.70	6.00
1	3.0	28.4	101.6	4	25.4	7/8	127.0	120.7	127.0	3.86	8.50	3.41	7.50	3.40	7.50	4.09	9.00
1 1/4	4.8	30.2	111.3	4	25.4	7/8	127.0	120.7	127.0	4.54	10.00	4.10	9.00	4.09	9.00	4.54	10.00
1 1/2	6.4	31.8	124.0	4	28.6	1	139.7	133.4	139.7	5.90	13.00	5.45	12.00	5.40	11.90	5.90	13.00
2	7.9	38.1	165.1	8	25.4	7/8	146.1	139.7	146.1	10.89	24.00	9.98	22.00	9.53	21.00	11.34	25.00
2 1/2	7.9	47.8	190.5	8	28.6	1	158.8	152.4	158.8	16.33	36.00	15.80	34.80	13.15	29.00	16.00	35.30
3	9.7	41.1	190.5	8	25.4	7/8	146.1	139.7	146.1	15.00	33.00	11.80	26.00	11.34	25.00	13.17	29.00
4	11.2	47.8	235.0	8	31.8	1 1/8	171.5	165.1	171.5	23.13	51.00	23.20	51.00	22.60	48.50	24.50	54.00
5	11.2	53.8	279.4	8	34.9	1 1/4	190.5	184.2	190.5	38.50	84.90	37.65	83.00	36.74	81.00	39.46	87.00
6	12.7	57.2	317.5	12	31.8	1 1/8	190.5	184.2	196.9	49.89	110.00	48.30	106.50	47.50	104.70	51.50	113.50
8	12.7	63.5	393.7	12	38.1	1 3/8	222.3	215.9	222.3	79.45	175.00	75.00	166.30	86.00	189.60	89.00	106.20
10	12.7	71.4	469.9	16	38.1	1 3/8	235.0	228.6	235.0	118.04	260.00	111.13	245.00	125.64	277.00	131.54	290.00
12	12.7	76.2	533.4	20	38.1	1 3/8	254.0	247.7	254.0	157.00	346.00	146.00	321.80	167.00	368.00	187.00	412.30
14	12.7	82.6	558.8	20	41.3	1 1/2	273.1	266.7	279.4	181.60	400.40	172.36	380.00	180.07	397.00	224.07	494.00
16	12.7	85.9	616.0	20	44.5	1 5/8	285.8	279.4	292.1	224.73	495.50	192.95	425.40	211.11	465.40	272.40	600.50
18	12.7	88.9	685.8	20	50.8	1 7/8	323.9	317.5	336.6	308.72	680.60	272.40	600.50	295.10	650.60	385.90	850.80
20	12.7	91.9	749.3	20	54.0	2	349.3	342.9	362.0	376.82	830.70	331.42	730.60	367.74	810.70	488.00	1076.00
24	12.7	101.6	901.7	20	66.7	2 1/2	438.2	431.8	457.2	685.00	1510.00	632.00	1393.30	700.00	1543.00	905.00	1995.00

Notes:

(1) For the inside diameter of pipes (corresponding to 'Bore' (B_1) of Welding Neck Flanges), refer to page 56–57.

(2) For Slip–on, Threaded, Lap Joint and Socket Welding Flanges, the hubs can be shaped either vertical from base to top or tapered within the limits of 7 degrees.

(3) Blind Flanges may be made with the same hub as that used for Slip–on Flanges or without hub.

(4) The gasket surface and backside (bearing surface for bolting) are made parallel within 1 degree. To accomplish parallelism, spot facing is carried out according to MSS SP–9, without reducing thickness (t).

(5) Dimensions of sizes 1/2″ through 2 1/2″ are the same as for Class 1500 Flanges

CLASS 1500 FLANGES

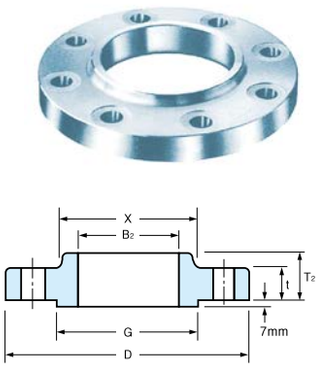

SLIP-ON

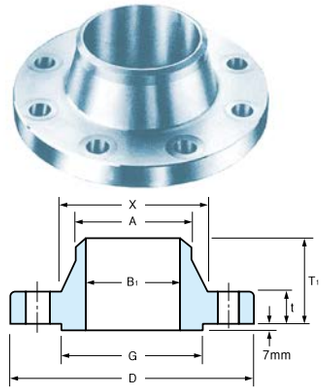

WELDING NECK

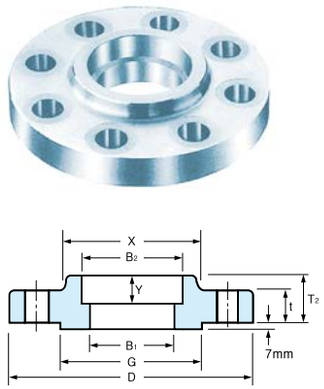

SOCKET WELDING

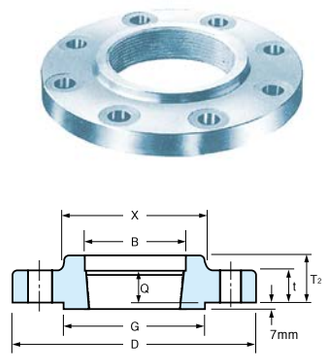

THREADED

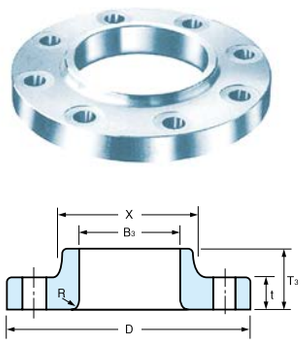

LAP JOINT

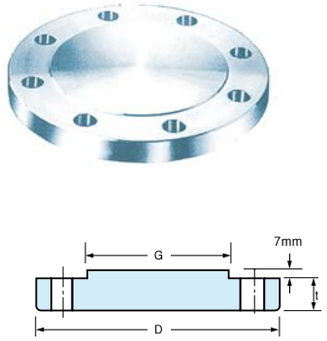

BLIND

Depth of counterbore
- For NPS 2″ : 6.35
- NPS 2½ and large : 9.65
- ½ ≤NPS≤3, ±0.25mm(±0.010″)

ASME B16.5 FORGED FLANGES

Unit : mm

Nominal Pipe Size	Outside Diam.	Diam. at Base of Hub	O. D. of Raised Face	Thick-ness	BORE				LENGTH THRU HUB			Diam. of Hub at Bevel	Radius of Lap Joint	Thread Length
					Welding Neck Socket Welding	Slip-on Socket Welding	Lap Joint	Counter Bore Min. Threaded Min.	Welding Neck	Slip-on Threaded Socket Welding	Lap Joint			
	D	X	G	t	B_1	B_2	B_3	B	T_1	T_2	T_3	A	R	Q
1/2	121	38.1	35.1	22.4	See Note(1) To be specified by purchaser.	22.4	22.9	23.6	60.5	31.8	31.8	21.3	3.0	22.4
3/4	130	44.5	42.9	25.4		27.7	28.2	29.0	69.9	35.1	35.1	26.7	3.0	25.4
1	149	52.3	50.8	28.4		34.5	35.1	35.8	73.2	41.1	41.1	33.5	3.0	28.4
1 1/4	159	63.5	63.5	28.4		43.2	43.7	44.5	73.2	41.1	41.1	42.2	4.8	30.2
1 1/2	178	69.9	73.2	31.8		49.5	50.0	50.5	82.6	44.5	44.5	48.3	6.4	31.8
2	216	104.6	91.9	38.1		62.0	62.5	63.5	101.6	57.2	57.2	60.5	7.9	38.1
2 1/2	244	124.0	104.6	41.1		74.7	75.4	76.2	104.6	63.5	63.5	73.2	7.9	47.8
3	267	133.4	127.0	47.8		90.7	91.4	92.2	117.3	73.2	73.2	88.9	9.7	50.8
4	311	162.1	157.2	53.8		116.1	116.8	117.6	124.0	90.4	90.4	114.3	11.2	57.2
5	375	196.9	185.7	73.2		143.8	144.5	144.5	155.4	104.6	104.6	141.2	11.2	63.5
6	394	228.6	215.9	82.6		170.7	171.5	171.5	171.5	119.1	119.1	168.4	12.7	69.9
8	483	292.1	269.7	91.9		221.5	222.3	222.3	212.9	142.7	142.7	219.2	12.7	76.2
10	584	368.3	323.9	108.0		276.4	277.4	276.4	254.0	158.8	177.8	273.1	12.7	84.1
12	673	450.9	381.0	124.0		327.2	328.2	328.7	282.4	180.8	218.9	323.9	12.7	91.9
14	749	495.3	412.8	133.4		359.2	360.2	360.4	298.5	–	241.3	355.6	12.7	–
16	826	552.5	469.9	146.1		410.5	411.2	411.2	311.2	–	260.4	406.4	12.7	–
18	914	596.9	533.4	162.1		461.8	462.3	462.0	327.2	–	276.4	457.2	12.7	–
20	984	641.4	584.2	177.8		513.1	514.4	512.8	355.6	–	292.1	508.0	12.7	–
24	1168	762.0	692.2	203.2		616.0	616.0	614.4	406.4	–	330.2	609.6	12.7	–

Notes:
(1) For the inside diameter of pipes (corresponding to 'Bore' (B_1) of Welding Neck Flanges), refer to page 56–57.
(2) For Slip-on, Threaded, Lap Joint and Socket Welding Flanges, the hubs can be shaped either vertical from base to top or tapered within the limits of 7 degrees.

Unit : mm

Nominal Pipe Size	Depth of Socket	DRILLING			BOLTING				APPROXIMATE WEIGHT									
						Stud Bolt Length			Welding Neck		Slip-on and Threaded		Lap Joint		Blind		Socket Welding	
		Bolt Circle Diam	Number of Holes	Diam of Holes	Diam of Bolts (inch)	Raised Face	Male-Female Tongue-Groove	Ring Joint										
	Y								kg	lb	kg	lb	kg	lb	kg	lb	kg	lb
1/2	9.7	82.6	4	22.2	3/4	108.0	101.6	108.0	2.10	4.60	1.80	4.00	1.80	4.00	1.90	4.00	1.81	4.00
3/4	11.2	88.9	4	22.2	3/4	114.3	108.0	114.3	2.72	6.00	2.27	5.00	2.27	5.00	2.72	6.00	2.81	6.20
1	12.7	101.6	4	25.4	7/8	127.0	120.7	127.0	3.86	8.50	3.40	7.50	3.40	7.50	4.08	9.00	3.61	8.00
1 1/4	14.2	111.3	4	25.4	7/8	127.0	120.7	127.0	4.54	10.00	4.10	9.00	4.09	10.80	4.30	9.50	4.99	11.00
1 1/2	15.7	124.0	4	28.6	1	139.7	133.4	139.7	5.90	13.00	5.45	12.00	5.40	11.90	5.90	13.00	6.76	14.90
2	17.5	165.1	8	25.4	7/8	146.1	139.7	146.1	10.89	24.00	10.50	23.00	9.53	21.00	11.30	25.00	10.89	24.00
2 1/2	19.1	190.5	8	28.6	1	158.8	152.4	158.8	16.34	36.00	15.80	34.80	13.15	29.00	16.00	35.30	16.34	36.00
3	20.6	203.2	8	31.8	1 1/8	177.8	171.5	177.8	21.79	48.00	21.77	48.00	17.24	38.00	21.79	48.00		
4	23.9	241.3	8	34.9	1 1/4	196.9	190.5	196.9	31.30	69.00	31.00	68.40	29.00	63.90	33.11	73.00		
5	23.9	292.1	8	41.3	1 1/2	247.7	241.3	247.7	59.02	130.00	58.80	129.60	54.00	119.00	60.00	132.30		
6	26.9	317.5	12	38.1	1 3/8	260.4	254.0	266.7	74.91	165.00	74.00	163.00	62.00	136.70	75.00	165.30		
8	31.8	393.7	12	44.5	1 5/8	292.1	285.8	323.9	123.83	273.00	117.73	258.00	129.73	236.00	136.98	302.00		
10	33.3	482.6	12	50.8	1 7/8	336.6	330.2	342.9	205.93	454.00	197.49	435.40	220.19	485.40	229.97	507.00		
12	39.6	571.5	16	54.0	2	374.7	368.3	387.4	306.00	674.60	264.00	582.00	286.02	630.60	316.00	696.70		
14	41.4	635.0	16	60.3	2 1/4	406.4	400.1	425.5	416.00	917.00	–	–	404.06	890.80	421.00	928.00		
16	44.5	704.9	16	66.7	2 1/2	444.5	438.2	469.9	567.50	1250.00	–	–	522.10	1151.00	559.00	1232.70		
18	49.3	774.7	16	73.0	2 3/4	495.3	489.0	527.1	736.00	1622.60	–	–	669.65	1476.30	761.00	1677.70		
20	54.1	831.9	16	79.4	3	539.8	533.4	565.2	929.00	2048.00	–	–	805.85	1776.60	967.00	2131.80		
24	63.5	990.6	16	92.1	3 1/2	616.0	609.6	647.7	1504.00	3315.70	–	–	1285.55	2834.00	1568.00	3456.80		

(3) Blind Flanges may be made with the same hub as that used for Slip-on Flanges or without hub.
(4) The gasket surface and backside (bearing surface for bolting) are made parallel within 1 degree. To accomplish parallelism, spot facing is carried out according to MSS SP-9, without reducing thickness (t).
(5) Dimensions of sizes 1/2″ through 2 1/2″ are the same as for Class 900 Flanges
(6) Socket Welding, Thread, Slip On Flange is coverd by ASME B16.5 only in sizes through 2 1/2 inch, over 2 1/2 inch is at the manufacturer's option.

CLASS 2500 FLANGES

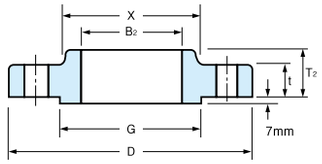

SLIP–ON

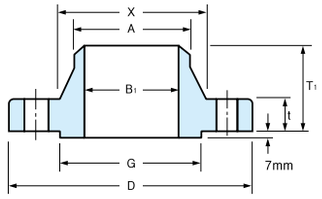

WELDING NECK

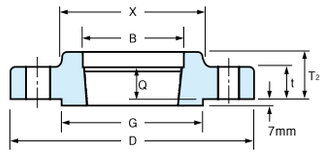

THREADED

(NPS 1/2 of 2 1/2 Only)

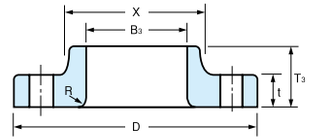

LAP JOINT

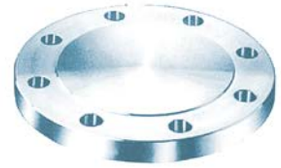

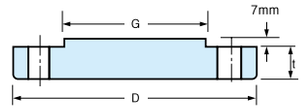

BLIND

ASME B16.5 FORGED FLANGES

Unit : mm

Nominal Pipe Size	Outside Diam.	Diam. at Base of Hub	O. D. of Raised Face	Thick-ness	BORE				LENGTH THRU HUB			Diam. of Hub at Bevel	Radius of Lap Joint	Thread Length
					Welding Neck Socket Welding	Slip-on Socket Welding	Lap Joint	Counter Bore Min. Threaded Min.	Welding Neck	Slip-on Threaded Socket Welding	Lap Joint			
	D	X	G	t	B_1	B_2	B_3	B	T_1	T_2	T_3	A	R	Q
1/2	133	42.9	35.1	30.2	To be specified by purchaser.	22.4	22.9	23.6	73.2	39.6	39.6	21.3	3.0	28.4
3/4	140	50.8	42.9	31.8		27.7	28.2	29.0	79.2	42.9	42.9	26.7	3.0	31.8
1	159	57.2	50.8	35.1		34.5	35.1	35.8	88.9	47.8	47.8	33.5	3.0	35.1
1 1/4	184	73.2	63.5	38.1		43.2	43.7	44.5	95.3	52.3	52.3	42.2	4.8	38.1
1 1/2	203	79.2	73.2	44.5		49.5	50.0	50.5	111.3	60.5	60.5	48.3	6.4	44.5
2	235	95.3	91.9	50.8		62.0	62.5	63.5	127.0	69.9	69.9	60.5	7.9	50.8
2 1/2	267	114.3	104.6	57.2		74.7	75.4	76.2	142.7	79.2	79.2	73.2	7.9	57.2
3	305	133.4	127.0	66.5		90.7	91.4	92.2	168.1	91.9	91.9	88.9	9.7	63.5
4	356	165.1	157.2	76.2		116.1	116.8	117.6	190.5	108.0	108.0	114.3	11.2	69.9
5	419	203.2	185.7	91.9		143.8	144.5	144.5	228.6	130.0	130.0	141.2	11.2	76.2
6	483	235.0	215.9	108.0		170.7	171.5	171.5	273.1	152.4	152.4	168.4	12.7	82.6
8	552	304.8	269.7	127.0		221.5	222.3	222.3	317.5	177.8	177.8	219.2	12.7	95.3
10	673	374.7	323.9	165.1		276.4	277.4	276.4	419.1	228.6	228.6	273.1	12.7	108.0
12	762	441.5	381.0	184.2		327.2	328.2	328.7	463.6	254.0	254.0	323.9	12.7	120.7

Unit : mm

Nominal Pipe Size	DRILLING			BOLTING Stud Bolt Length				APPROXIMATE WEIGHT							
	Bolt Circle Diam	Number of Holes	Diam of Holes	Diam of Bolts (inch)	Raised Face	Male-Female Tongue-Groove	Ring Joint	Welding Neck		Slip-on and Threaded		Lap Joint		Blind	
								kg	lb	kg	lb	kg	lb	kg	lb
1/2	88.9	4	22.2	3/4	120.7	114.3	120.7	3.18	7.00	3.18	7.00	3.00	6.60	3.18	7.00
3/4	95.3	4	22.2	3/4	127.0	120.7	127.0	4.08	9.00	4.08	9.00	3.63	8.00	4.54	10.00
1	108.0	4	25.4	7/8	139.7	133.4	139.7	5.45	12.00	5.44	12.00	4.99	11.00	5.44	12.00
1 1/4	130.0	4	28.6	1	152.4	146.1	152.4	9.07	20.00	8.16	18.00	7.26	16.00	8.16	18.00
1 1/2	146.1	4	31.8	1 1/8	171.5	165.1	171.5	11.35	25.00	11.00	24.30	9.99	22.00	10.44	23.00
2	171.5	8	28.6	1	177.8	171.5	177.8	19.07	42.00	17.25	38.00	16.80	37.00	17.71	39.00
2 1/2	196.9	8	31.8	1 1/8	196.9	190.5	203.2	23.61	52.00	24.97	55.00	24.06	53.00	25.42	56.00
3	228.6	8	34.9	1 1/4	222.3	215.9	228.6	42.68	94.00	37.68	83.00	36.32	80.00	39.04	86.00
4	273.1	8	41.3	1 1/2	254.0	247.7	260.4	64.00	141.00	58.00	127.90	54.48	120.00	60.38	133.00
5	323.9	8	47.6	1 3/4	298.5	292.1	311.2	110.68	244.00	95.25	210.00	92.53	204.00	101.15	223.00
6	368.3	8	54.0	2	342.9	336.6	355.6	176.46	378.00	146.51	323.00	143.01	315.30	156.63	345.30
8	438.2	12	54.0	2	381.0	374.7	393.7	261.27	576.00	219.99	485.00	213.38	470.40	240.62	530.50
10	539.8	12	66.7	2 1/2	489.0	482.6	508.0	484.43	1068.00	419.57	925.00	408.60	900.80	465.36	1026.00
12	619.3	12	73.0	2 3/4	539.8	533.4	558.8	692.35	1526.30	590.20	1301.00	572.95	1263.00	664.06	1464.00

Notes:

(1) For the inside diameter of pipes (corresponding to 'Bore' (B1) of Welding Neck Flanges), refer to page 56–57.

(2) For Slip–on, Threaded and Lap Joint Flanges, the hubs can be shaped either vertical from base to top or tapered within the limits of 7 degrees.

(3) Blind Flanges may be made with the same hub as that used for Slip–on Flanges or without hub.

(4) The gasket surface and backside (bearing surface for bolting) are made parallel within 1 degree. To accomplish parallelism, spot facing is carried out according to MSS SP–9, without reducing thickness (t).

(5) Class 2500 Slip–on Flanges are not covered by ASME B16.5, slip–on flanges are at the manufacturer's option.

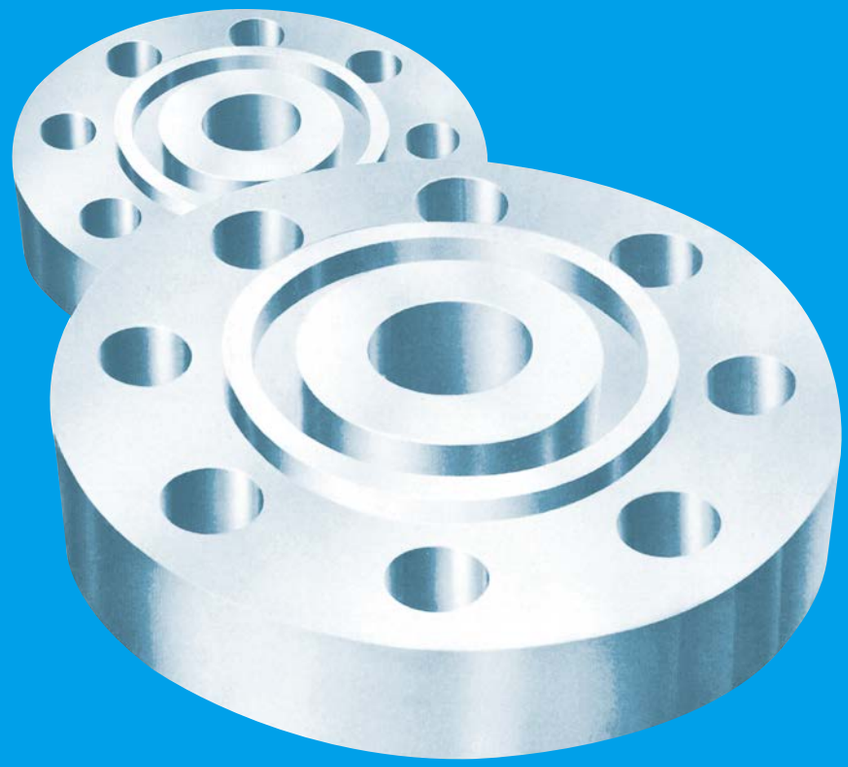

RING JOINT FLANGES

Class 150 Flanges

Class 300, 400, 600 Flanges

Class 900Flanges

Class 1500Flanges

Class 2500Flanges

CLASS 150 FLANGES RING JOINT FLANGES FACING DIMENSIONS

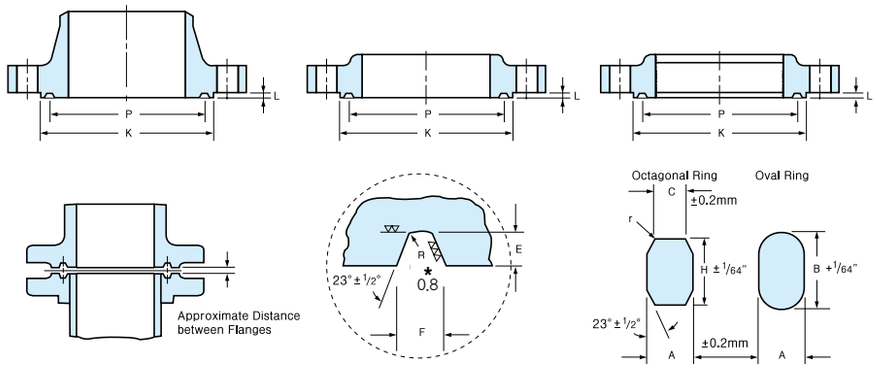

ASME B16.5 FORGED FLANGES

Unit : mm

Nominal Pipe Size	Pitch Diam. of Ring and Groove	Width of Ring	HEIGHT OF RING		Width of Flat on Octagonal Rings	Width of Groove	Depth of Groove	Diameter of Raised Face for Ring Joint or Lapped	Ring Number	Approximate Distance Between Flanges of Ring Joints When Ring is Compressed
			Oval	Octagonal						
	P	A	B	H	C	F	E (L*)	K (Min)		
1	47.6	8.0	14.3	12.7	5.2	8.7	6.4	63.5	R15	4.1
1 1/4	57.2	8.0	14.3	12.7	5.2	8.7	6.4	73.2	R17	4.1
1 1/2	65.1	8.0	14.3	12.7	5.2	8.7	6.4	82.6	R19	4.1
2	82.6	8.0	14.3	12.7	5.2	8.7	6.4	101.6	R22	4.1
2 1/2	101.6	8.0	14.3	12.7	5.2	8.7	6.4	120.7	R25	4.1
3	114.3	8.0	14.3	12.7	5.2	8.7	6.4	133.4	R29	4.1
3 1/2	131.8	8.0	14.3	12.7	5.2	8.7	6.4	153.9	R33	4.1
4	149.2	8.0	14.3	12.7	5.2	8.7	6.4	171.5	R36	4.1
5	171.5	8.0	14.3	12.7	5.2	8.7	6.4	193.5	R40	4.1
6	193.7	8.0	14.3	12.7	5.2	8.7	6.4	218.9	R43	4.1
8	247.7	8.0	14.3	12.7	5.2	8.7	6.4	273.1	R48	4.1
10	304.8	8.0	14.3	12.7	5.2	8.7	6.4	330.2	R52	4.1
12	381.0	8.0	14.3	12.7	5.2	8.7	6.4	406.4	R56	4.1
14	396.9	8.0	14.3	12.7	5.2	8.7	6.4	425.5	R59	3.0
16	454.0	8.0	14.3	12.7	5.2	8.7	6.4	482.6	R64	3.0
18	517.5	8.0	14.3	12.7	5.2	8.7	6.4	546.1	R68	3.0
20	558.8	8.0	14.3	12.7	5.2	8.7	6.4	596.9	R72	3.0
24	673.1	8.0	14.3	12.7	5.2	8.7	6.4	711.2	R76	3.0

Notes:

Unless otherwise specified by the customer, Ring Type Joint Flanges will be furnished in accordance with these details. The depth of groove is added to the minimum flange thickness.

* Raised face "L" is equal to groove dimension "E" but is not subject to tolerances for "E".

* A plus tolerance of 3/64 in, for heights B and H is permitted providing the variation in the height of any given ring does not exceed 1/64 in, throughout its entire circumference.
Radius "r" is 1/16" for ring widths 7/8" and less and 3/32" for ring widths 1" (25.4mm) and over.

* Tolerance – K : min – P : ±0.13
– E : +0.40, –0 – R : R≤2 => +0.8, –0
– F : ±0.20 R>2 ±0.8

CLASS 300–400–600 FLANGES RING JOINT FLANGES FACING DIMENSIONS

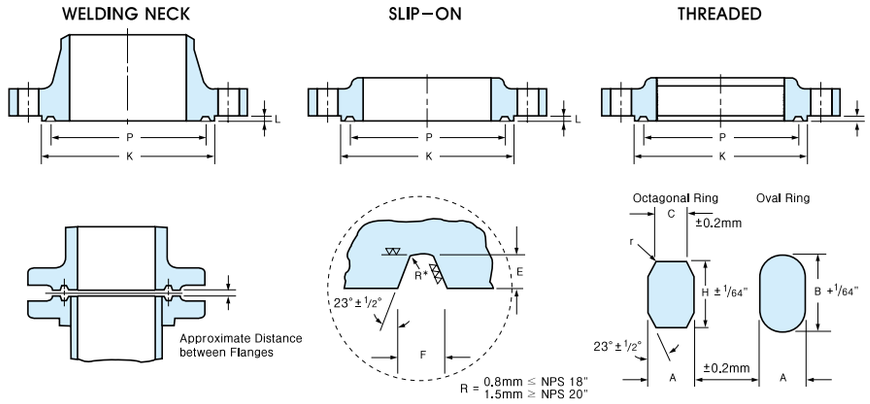

ASME B16.5 FORGED FLANGES

Unit : mm

Nominal Pipe Size	Pitch Diam. of Ring and Groove	Width of Ring	HEIGHT OF RING		Width of Flat on Octagonal Rings	Width of Groove	Depth of Groove	Diameter of Raised Face for Ring Joint or Lapped	Ring Number	Approximate Distance Between Flanges of Ring Joints When Ring is Compressed		
			Oval	Octagonal								
	P	A	B	H	C	F	E (L*)	K (Min)		CLASS 300	CLASS 400	CLASS 600
1/2	34.1	6.4	11.1	9.5	4.3	7.1	5.6	50.8	R 11	3.0	–	3.0
3/4	42.9	8.0	14.3	12.7	5.2	8.7	6.4	63.5	R 13	4.1	–	4.1
1	50.8	8.0	14.3	12.7	5.2	8.7	6.4	69.9	R 16	4.1	–	4.1
1 1/4	60.3	8.0	14.3	12.7	5.2	8.7	6.4	79.2	R 18	4.1	–	4.1
1 1/2	68.3	8.0	14.3	12.7	5.2	8.7	6.4	90.4	R 20	4.1	–	4.1
2	82.6	11.1	17.5	15.9	7.7	11.9	7.9	108.0	R 23	5.6	–	4.8
2 1/2	101.6	11.1	17.5	15.9	7.7	11.9	7.9	127.0	R 26	5.6	–	4.8
3	123.8	11.1	17.5	15.9	7.7	11.9	7.9	146.1	R 31	5.6	–	4.8
3 1/2	131.8	11.1	17.5	15.9	7.7	11.9	7.9	158.8	R 34	5.6	–	4.8
4	149.2	11.1	17.5	15.9	7.7	11.9	7.9	174.8	R 37	5.6	5.6	4.8
5	181.0	11.1	17.5	15.9	7.7	11.9	7.9	209.6	R 41	5.6	5.6	4.8
6	211.1	11.1	17.5	15.9	7.7	11.9	7.9	241.3	R 45	5.6	5.6	4.8
8	269.9	11.1	17.5	15.9	7.7	11.9	7.9	301.8	R 49	5.6	5.6	4.8
10	323.9	11.1	17.5	15.9	7.7	11.9	7.9	355.6	R 53	5.6	5.6	4.8
12	381.0	11.1	17.5	15.9	7.7	11.9	7.9	412.8	R 57	5.6	5.6	4.8
14	419.1	11.1	17.5	15.9	7.7	11.9	7.9	457.2	R 61	5.6	5.6	4.8
16	469.9	11.1	17.5	15.9	7.7	11.9	7.9	508.0	R 65	5.6	5.6	4.8
18	533.4	11.1	17.5	15.9	7.7	11.9	7.9	574.5	R 69	5.6	5.6	4.8
20	584.2	12.7	19.1	17.5	8.7	13.5	9.5	635.0	R 73	5.6	5.6	4.8
24	692.2	15.9	22.2	20.7	10.5	16.7	11.1	749.3	R 77	6.4	6.4	5.6

Notes:

Unless otherwise specified by the customer, Ring Type Joint Flanges will be furnished in accordance with these details.
The depth of groove is added to the minimum flange thickness.

* Raised face "L" is equal to groove dimension "E" but is not subject to tolerances for "E".
* A plus tolerance of 3/64 in, for heights B and H is permitted providing the variation in the height of any given ring does not exceed 1/64 in, throughout its entire circumference.
* Radius "r" is 1/16″ for ring widths 7/8″ and less and 3/32″ for ring widths 1″ (25.4mm) and over.
  Lapped flanges 300#,600# 3" : Ring Number R30
* Tolerance – K : min – P : ±0.13
  – E : +0.40, –0 – R : R≤2 => +0.8, –0
  – F : ±0.20 R>2 ±0.8

CLASS 900 FLANGES RING JOINT FLANGES FACING DIMENSIONS

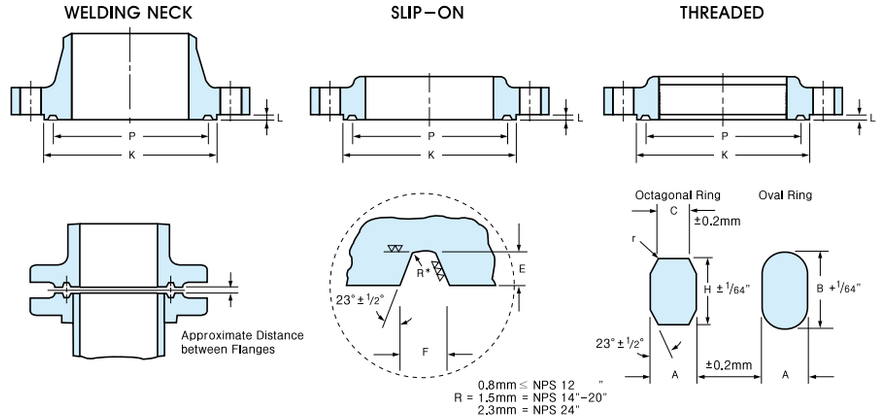

Unit : mm

Nominal Pipe Size	Pitch Diam. of Ring and Groove	Width of Ring	HEIGHT OF RING		Width of Flat on Octagonal Rings	Width of Groove	Depth of Groove	Diameter of Raised Face for Ring Joint or Lapped	Ring Number	Approximate Distance Between Flanges of Ring Joints When Ring is Compressed
			Oval	Octagonal						
	P	A	B	H	C	F	E (L*)	K (Min)		
For size 2 1/2 and smaller, use Class 1500 Ring Joint Flanges										
3	123.8	11.1	17.5	15.9	7.7	11.9	7.9	155.4	R 31	4.1
4	149.2	11.1	17.5	15.9	7.7	11.9	7.9	180.8	R 37	4.1
5	181.0	11.1	17.5	15.9	7.7	11.9	7.9	215.9	R 41	4.1
6	211.1	11.1	17.5	15.9	7.7	11.9	7.9	241.3	R 45	4.1
8	269.9	11.1	17.5	15.9	7.7	11.9	7.9	307.8	R 49	4.1
10	323.9	11.1	17.5	15.9	7.7	11.9	7.9	362.0	R 53	4.1
12	381.0	11.1	17.5	15.9	7.7	11.9	7.9	419.1	R 57	4.1
14	419.1	15.9	22.2	20.7	10.5	16.7	11.1	466.9	R 62	4.1
16	469.9	15.9	22.2	20.7	10.5	16.7	11.1	523.7	R 66	4.1
18	533.4	19.1	25.4	23.8	11.1	19.8	12.7	593.9	R 70	4.8
20	584.2	19.1	25.4	23.8	12.3	19.8	12.7	647.7	R 74	4.8
24	692.2	25.4	33.4	31.8	17.3	27.0	15.9	771.7	R 78	5.6

Notes:

Unless otherwise specified by the customer, Ring Type Joint Flanges will be furnished in accordance with these details.
The depth of groove is added to the minimum flange thickness.

* Raised face "L" is equal to groove dimension "E" but is not subject to tolerances for "E".
* A plus tolerance of 3/64 in, for heights B and H is permitted providing the variation in the height of any given ring does not exceed 1/64 in, throughout its entire circumference.
* Radius "r" is 1/16″ for ring widths 7/8″ and less and 3/32″ for ring widths 1″ (25.4mm) and over.
* Tolerance – K : min – P : ±0.13
  – E : +0.40, –0 – R : R≤2 => +0.8, –0
  – F : ±0.20 R>2 ±0.8

CLASS 1500 FLANGES RING JOINT FLANGES FACING DIMENSIONS

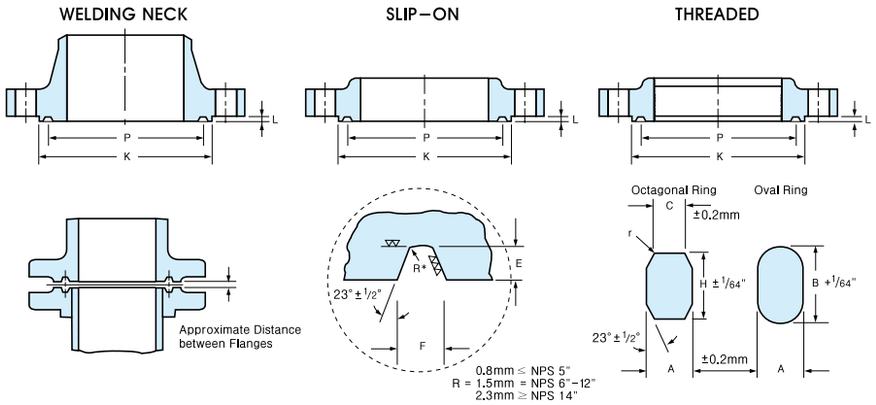

ASME B16.5 FORGED FLANGES

Unit : mm

Nominal Pipe Size	Pitch Diam. of Ring and Groove	Width of Ring	HEIGHT OF RING		Width of Flat on Octagonal Rings	Width of Groove	Depth of Groove	Diameter of Raised Face for Ring Joint or Lapped	Ring Number	Approximate Distance Between Flanges of Ring Joints When Ring is Compressed
			Oval	Octagonal						
	P	A	B	H	C	F	E (L*)	K (Min)		
1/2	39.7	8.0	14.3	12.7	5.2	8.7	6.4	60.5	R 12	4.1
3/4	44.5	8.0	14.3	12.7	5.2	8.7	6.4	66.5	R 14	4.1
1	50.8	8.0	14.3	12.7	5.2	8.7	6.4	71.4	R 16	4.1
1 1/4	60.3	8.0	14.3	12.7	5.2	8.7	6.4	81.0	R 18	4.1
1 1/2	68.3	8.0	14.3	12.7	5.2	8.7	6.4	91.9	R 20	4.1
2	95.3	11.1	17.5	15.9	7.7	11.9	7.9	124.0	R 24	3.0
2 1/2	108.0	11.1	17.5	15.9	7.7	11.9	7.9	136.7	R 27	3.0
3	136.5	11.1	17.5	15.9	7.7	11.9	7.9	168.1	R 35	3.0
4	161.9	11.1	17.5	15.9	7.7	11.9	7.9	193.5	R 39	3.0
5	193.7	11.1	17.5	15.9	7.7	11.9	7.9	228.6	R 44	3.0
6	211.1	12.7	19.1	17.5	8.7	13.5	9.5	247.7	R 46	3.0
8	269.9	15.9	22.2	20.7	10.5	16.7	11.1	317.5	R 50	4.1
10	323.9	15.9	22.2	20.7	10.5	16.7	11.1	371.3	R 54	4.1
12	381.0	22.2	28.6	27.0	14.8	23.0	14.3	438.2	R 58	4.8
14	419.1	25.4	33.4	31.8	17.3	27.0	15.9	489.0	R 63	5.6
16	469.9	28.6	36.5	34.9	19.8	30.2	17.5	546.1	R 67	7.9
18	533.4	28.6	36.5	34.9	19.8	30.2	17.5	612.6	R 71	7.9
20	584.2	31.8	39.7	38.1	22.3	33.3	17.5	673.1	R 75	9.7
24	692.2	34.9	44.5	41.3	24.8	36.5	20.6	793.8	R 79	11.2

Notes:

Unless otherwise specified by the customer, Ring Type Joint Flanges will be furnished in accordance with these details.
The depth of groove is added to the minimum flange thickness.

* Raised face "L" is equal to groove dimension "E" but is not subject to tolerances for "E".
* A plus tolerance of 3/64 in, for heights B and H is permitted providing the variation in the height of any given ring does not exceed 1/64 in, throughout its entire circumference.
* Radius "r" is 1/16″ for ring widths 7/8″ and less and 3/32″ for ring widths 1″ (25.4mm) and over.
* Tolerance – K : min – P : ±0.13
  – E : +0.40, –0 – R : R≤2 => +0.8, –0
  – F : ±0.20 R>2 ±0.8

CLASS 2500 FLANGES RING JOINT FLANGES FACING DIMENSIONS

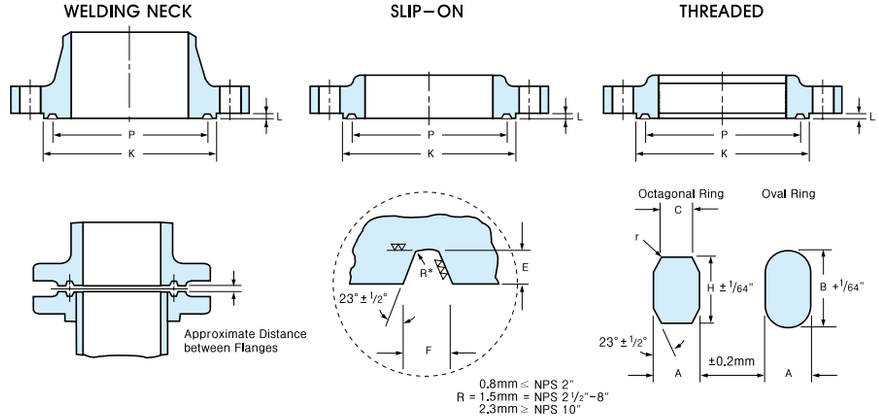

Unit : mm

Nominal Pipe Size	Pitch Diam. of Ring and Groove	Width of Ring	HEIGHT OF RING		Width of Flat on Octagonal Rings	Width of Groove	Depth of Groove	Diameter of Raised Face for Ring Joint or Lapped	Ring Number	Approximate Distance Between Flanges of Ring Joints When Ring is Compressed
			Oval	Octagonal						
	P	A	B	H	C	F	E (L*)	K (Min)		
1/2	42.9	8.0	14.3	12.7	5.2	8.7	6.4	65.0	R 13	4.1
3/4	50.8	8.0	14.3	12.7	5.2	8.7	6.4	73.2	R 16	4.1
1	60.3	8.0	14.3	12.7	5.2	8.7	6.4	82.6	R 18	4.1
1 1/4	72.2	11.1	17.5	15.9	7.7	11.9	7.9	101.6	R 21	3.0
1 1/2	82.6	11.1	17.5	15.9	7.7	11.9	7.9	114.3	R 23	3.0
2	101.6	11.1	17.5	15.9	7.7	11.9	7.9	133.4	R 26	3.0
2 1/2	111.1	12.7	19.1	17.5	8.7	13.5	9.5	149.4	R 28	3.0
3	127.0	12.7	19.1	17.5	8.7	13.5	9.5	168.1	R 32	3.0
4	157.2	15.9	22.2	20.7	10.5	16.7	11.1	203.2	R 38	4.1
5	190.5	19.1	25.4	23.8	12.3	19.8	12.7	241.3	R 42	4.1
6	228.6	19.1	25.4	23.8	12.3	19.8	12.7	279.4	R 47	4.1
8	279.4	22.2	28.6	27.0	14.8	23.0	14.3	339.9	R 51	4.8
10	342.9	28.6	36.5	34.9	19.8	30.2	17.5	425.5	R 55	6.4
12	406.4	31.8	39.7	38.1	22.3	33.3	17.5	495.3	R 60	7.9

Notes:

Unless otherwise specified by the customer, Ring Type Joint Flanges will be furnished in accordance with these details.
The depth of groove is added to the minimum flange thickness.

* Raised face "L" s equal to groove dimension "E" but is not subject to tolerances for "E".
* A plus tolerance of 3/64 in, for heights B and H is permitted providing the variation in the height of any given ring does not exceed 1/64 in, throughout its entire circumference.
* Radius "r" is 1/16″ for ring widths 7/8″ and less and 3/32″ for ring widths 1″ (25.4mm) and over.
* Tolerance – K : min – P : ±0.13
  – E : +0.40, –0 – R : R≤2 => +0.8, –0
  – F : ±0.20 R>2 ±0.8

THREADED AND SLIP–ON TYPES

HUB – For hub diameter (X) and height of hub above the back of the flange (N) refer to the list of standard flange specification of the same type and pressure and use the dimensions of a flange one nominal pipe size smaller than the nominal pipe size from which the reduction is being made.

FLANGE O.D., DRILLING TEMPLATE AND THICKNESS – Outside diameter, drilling template and flange thickness Q(see note on FACINGS) agree with the dimensions of a standard flange of the nominal pipe size from which the reduction is being made.

FACING – Facing dimensions also agree with the dimensions of a standard flange of the nominal pipe size from which the reduction is being made.
Class 150, Class 300 forged steel Threaded, Slip–On, Welding Neck and Blind flanges are furnished with American Standard 1/16" raised face, Class 400, Class 600, Class 900, Class 1500 and Class 2500 flanges are supplied with American Standard 1/4" raised face.

BORE OR TAPPING – The bore or tapping is machined to accept a pipe of the nominal pipe size to which the reduction is being made. For reduction to sizes smaller than shown, BLIND FLANGES are tapped or bored to specified nominal pipe size.

EXAMPLE :

(1) The size designation is NPS 6 x 2 1/2 Class 300 reducing threaded flange.
This flange has the following dimensions:
NPS 2 1/2" = taper pipe thread tapping (ASME B1.20.1)
320 mm = diameter of regular NPS 6 Class 300 threaded flange
35 mm = thickness of regular NPS 6 Class 300 threaded flange
178 mm = diameter of hub for regular NPS 5 Class 300 threaded flange.
Hub diameter may be one size small to reduce machining.
In this example, a hub diameter of NPS 21/2 would be the smallest acceptable.
15.5 mm = height of hub for regular NPS 5 Class 300 threaded flange
(2) The size designation is NPS 6 x 2 Class 300 reducing threaded flange. Use regular NPS 6 Class 300 blind flange tapped with NPS 2 taper pipe thread (ASME B1.20.1)

WELDING NECK TYPES

On Reducing Welding Neck Flanges, which are made only on special order, the hub dimensions agree with the hub dimensions of standard flanges of the size to which reduction is being made. Other flange dimensions, including the drilling template, agree with the standard dimensions of the size from which the reduction is being made.

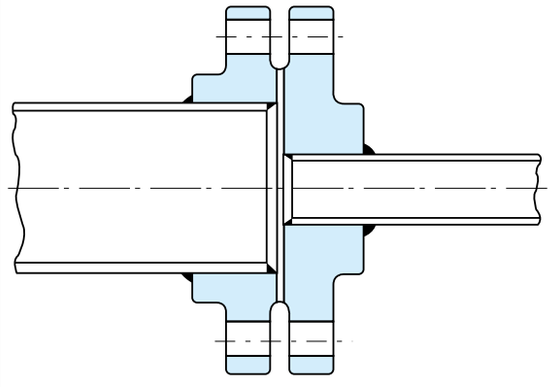

In ordering Reducing Flanges; specify (1) nominal pipe size of the tapping or bore to which the reduction is being made, (2) the outside diameter of the flange from which the reduction is being made and (3) pressure rating.

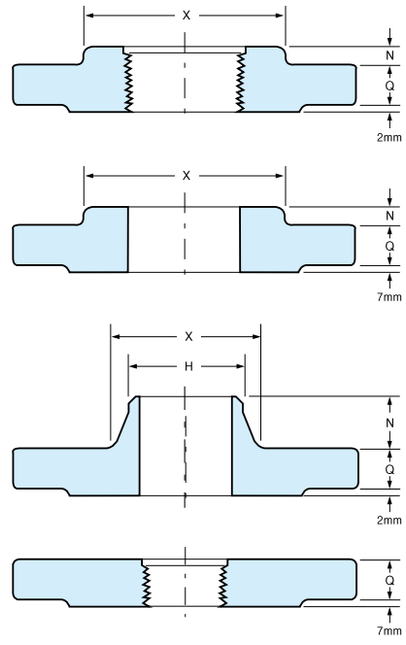

ASME B16.5 FORGED FLANGES

Unit : mm

Nominal Pipe Size to Which Reduction is to be Made to be Specified by Purchaser	Nominal Flange	OUTSIDE DIAMETER OF FLANGE FROM WHICH REDUCTION IS BEING MADE							Smallest Size Bore or Tapping Requiring Hub Flange
		CLASS 150	CLASS 300	CLASS 400	CLASS 600	CLASS 900	CLASS 1500	CLASS 2500	
	3/4	98.4	117.5	117.5	117.5	130.2	130.2	139.7	12.7
	1	108.0	123.8	123.8	123.8	149.2	149.2	158.8	12.7
	1 1/4	117.5	133.4	133.4	133.4	158.8	158.8	184.2	12.7
	1 1/2	127.0	155.6	155.6	155.6	177.8	177.8	203.2	12.7
	2	152.4	165.1	165.1	165.1	215.9	215.9	235.0	25.4
	2 1/2	177.8	190.5	190.5	190.5	244.5	244.5	266.7	31.8
	3	190.5	209.6	209.6	209.6	241.3	266.7	304.8	31.8
	3 1/2	215.9	228.6	228.6	228.6	–	–	–	38.1
	4	228.6	254.0	254.0	273.1	292.1	311.2	355.6	38.1
	5	254.0	279.4	279.4	330.2	349.3	374.7	419.1	38.1
	6	279.4	317.5	317.5	355.6	381.0	393.7	482.6	63.5
	8	342.9	381.0	381.0	419.1	469.9	482.6	552.5	76.2
	10	406.4	444.5	444.5	508.0	546.1	584.2	673.1	88.9
	12	482.6	520.7	520.7	558.8	609.6	673.1	762.0	88.9
	14	533.4	584.2	584.2	603.3	641.4	–	–	88.9
	16	596.9	647.7	647.7	685.8	704.9	–	–	101.6
	18	635.0	711.2	711.2	743.0	787.4	–	–	108.0
	20	698.5	774.7	774.7	812.8	857.3	–	–	101.6
	24	812.8	914.4	914.4	939.8	1041.4	–	–	101.6

Notes:
For reductions to sizes smaller than shown, blind flanges are tapped or bored for specified nominal pipe size.

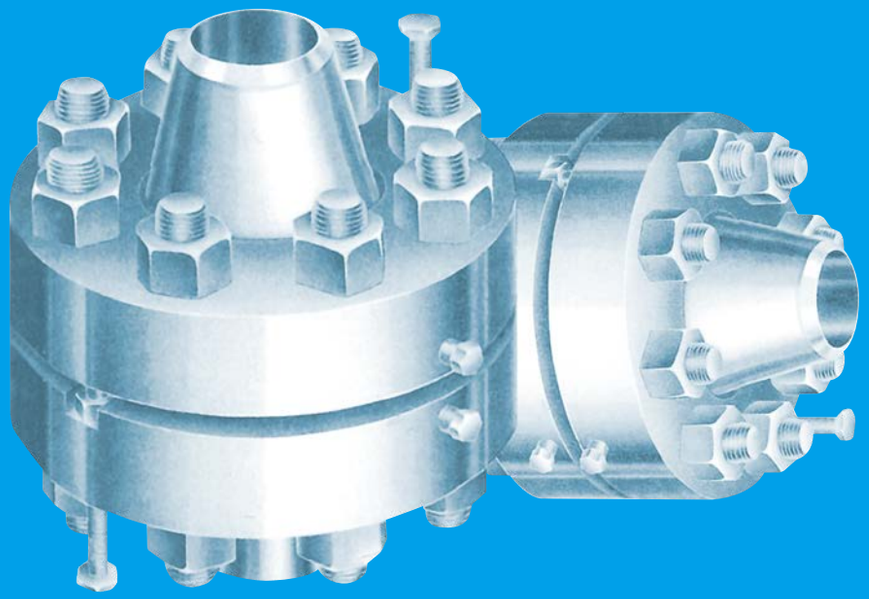

ORIFICE FLANGES

ANSI ORIFICE FLANGES

Class 300 Orifice Flanges

Class 400 Orifice Flanges

Class 600 Orifice Flanges

Class 900,1500 Orifice Flanges

Class 2500 Orifice Flanges

ASME ORIFICE FLANGES(ASME B16.36) FORGED FLANGES

ORIFICE FLANGES are widely used in conjunction with orifice meters for measuring the rate of flow of liquids and gases. They are basically the same as standard welding neck, slip-on and screwed flanges except for the provision of radial, tapped holes in the flange ring for meter connections and additional bolts to act as jack screws to facilitate separating the flanges for inspection or replacement of the orifice plate.

NOTES:

1. JACK SCREW PROVISION

(1) Each flange shall have a machine bolt mounted in a hole drilled on the flange centerline at 90 deg. from the pressure taps, for use as a jackscrew. Machine bolt shall be regular, with one heavy hex. nut.

(2) A slot shall be provided in the flange 0.06 in. (1.6mm) wider than the width across flats of the nut. The depth of the slot shall admit the nut so that there is no interference with the joining of the flanges when bolted together without orifice plate.

2. PRESSURE TAPS

(1) Each orifice flange is provided with two pressure tap holes extending radially from the outside diameter of the flange to the inside diameter of the flange. Corner taps may be used on NPS $1^1/2$ and smaller if space permits. Each pressure tap hole shall be equipped with a pipe plug.

(2) The 0.94 in (23.8mm) locating dimension for raised face and 0.75 in. (19.1mm) for ring joint shall be measured at the bore.

(3) Each pressure tap hole shall be equipped with a pipe plug.

3. FACING

The finish of contact faces shall conform to the requirements of ASME / ASME B16.5

4. FLANGE THREADS

(1) Threaded flanges shall have an American National Standard taper pipe thread conforming to ASME B1.20.1

(2) The thread shall be concentric with the axis of the flange and variations in alignment shall not exceed 0.06(1.6mm) in. per foot.

(3) The flanges are made with counterbores at the back of the flange and the threads shall be chamfered to the diameter of the counterbore at an angle of approximately 45 degrees with the axis of the thread to afford easy entrance in making a joint. The chamfer shall be concentric with the thread.

(4) In order to permit the pipe to be inserted to the face of the flange, the threads should have full root diameters through to the face of the flange, or shall have a counterbore at face of the flange.

(5) The gaging notch of the working gage shall come flush with the bottom of the chamfer in all threaded flanges and shall be considered as being the intersection of the chamfer cone and the pitch cone of the thread. This depth of chamfer is approximately equal to $^1/2$ of the pitch of the thread.

(6) The maximum allowable thread variation is one turn large or small from the gaging notch.

5. TOLERANCES

Tolerances on all dimensions shall be as shown in ASME B16.5 except for those shown below.

(1) Tolerance on location of center of pressure tap hole from flange face shall be:

a. Flanges smaller than nominal size 4±0.02 in (0.5mm)

b. Flanges nominal size 4 and larger ±0.03 in. (0.8mm)

(2) Bore diameter tolerance (welding neck flanges only) is ±0.5% of nominal value.

WELDING NECK (RAISED FACE)

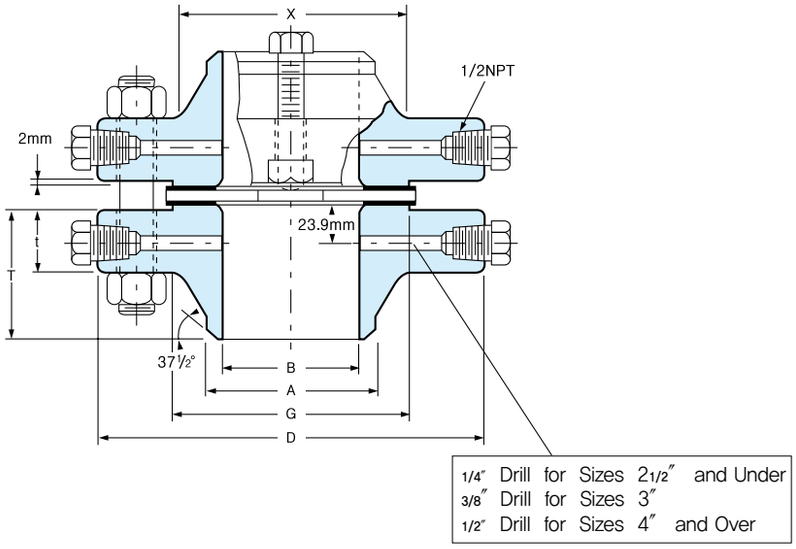

SLIP–ON

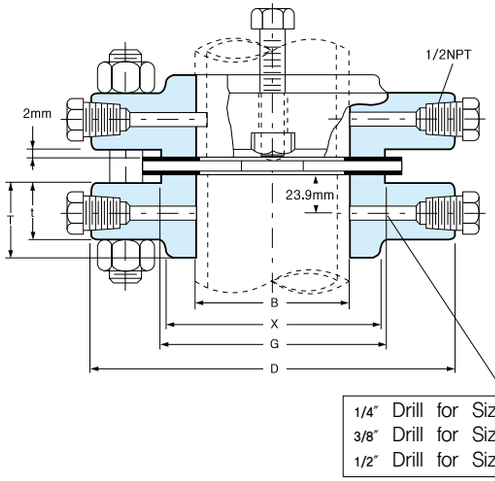

THREADED

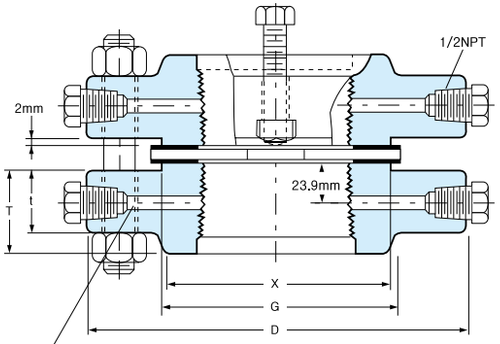

ASME B16.36 FORGED FLANGES

Unit : mm

Nominal Pipe Size	Outside Diam. of flange	THICKNESS OF FLANGE (t)	Diam. of Hub at Base	Diam. of Raised Face	Diam. of Hub at Bevel	LENGTH THRU HUB (T)		BORE (B)	
						Welding Neck	Slip–on & Threaded	Welding Neck	Slip–on
	D	Raised Face	X	G	A	Raised Face	Raised Face		
1	124	36.6	53.8	50.8	33.5	81.0	46.2	26.7	34.5
1 1/4	133	36.6	63.5	63.5	42.2	82.5	44.4	35.1	43.2
1 1/2	155	36.6	69.9	73.2	48.3	84.3	46.2	40.9	49.5
2	165	36.6	84.1	91.9	60.5	84.3	47.7	52.6	62.0
2 1/2	191	36.6	100.1	104.6	73.2	87.3	49.2	62.7	74.7
3	210	36.6	117.3	127.0	88.9	87.3	50.7	78.0	90.7
4	254	36.6	146.1	157.2	114.3	90.3	52.2	102.4	116.1
5	279	36.6	177.8	185.7	141.2	100.0	52.2	128.3	143.8
6	318	36.6	206.2	215.9	168.4	98.5	52.2	154.2	170.7
8	381	39.6	260.4	269.7	219.2	109.7	60.4	202.7	221.5
10	445	46.0	320.5	323.9	273.1	115.7	64.9	254.5	276.4
12	521	49.3	374.7	381.0	323.9	128.4	71.6	304.8	327.2
14	584	52.3	425.5	412.8	355.6	141.1	74.6	336.6	359.2
16	648	55.6	482.6	469.9	406.4	144.5	81.0	387.4	410.5
18	711	58.7	533.4	533.4	457.2	157.2	87.3	438.2	461.8
20	775	62.0	587.2	584.2	508.0	160.5	93.7	489.0	513.1
24	914	68.3	701.5	692.2	609.6	166.5	104.8	590.6	616.0

Unit : mm

Nominal Pipe Size	Pitch Diam. of Ring and Groove	Ring Number	DEPTH OF JACK SCREW SLOT	JACK SCREW SIZE	DRILLING TEMPLATE				
					Diam. of Bolt Circle	Number of Bolts	Diam. of Stud Bolts (inch)	Diam. of Bolt Holes	Length of Stud Bolts
	P		Raised Face	Raised Face (inch)					Raised Face
1	50.8	R 16	9.7	5/8x3	88.9	4	5/8	17.5	127.0
1 1/4	60.3	R 18	9.7	5/8x3	98.6	4	5/8	17.5	152.4
1 1/2	68.3	R 20	12.7	5/8x3	114.3	4	3/4	20.6	133.4
2	82.6	R 23	9.7	5/8x3	127.0	8	5/8	17.5	127.0
2 1/2	101.6	R 26	12.7	5/8x3	149.4	8	3/4	20.6	133.4
3	123.8	R 31	12.7	3/4x3	168.1	8	3/4	20.6	133.4
4	149.2	R 37	12.7	3/4x3.25	200.2	8	3/4	20.6	133.4
5	181.0	R 41	12.7	3/4x3.25	235.0	8	3/4	22.4	152.4
6	211.1	R 45	12.7	3/4x3.5	269.7	12	3/4	22.4	133.4
8	269.9	R 49	15.7	3/4x3.5	330.2	12	7/8	25.4	146.1
10	323.9	R 53	19.1	1x4	387.4	16	1	28.4	165.1
12	381.0	R 57	22.4	1x4	450.9	16	1 1/8	31.8	177.8
14	419.1	R 61	22.4	1x4.25	514.4	20	1 1/8	31.8	184.2
16	469.9	R 65	25.4	1x4.25	571.5	20	1 1/4	35.1	196.9
18	533.4	R 69	25.4	1x4.5	628.7	24	1 1/4	35.1	203.2
20	584.2	R 73	25.4	1x4.75	685.8	24	1 1/4	35.1	215.9
24	692.2	R 77	31.8	1x5	812.8	24	1 1/2	41.1	241.3

Notes:

(1) For the 'Bore' (B) of Welding Neck Flanges other than Standard wall Thickness, refer to page 56~57.

(2) Class 300 Welding Neck Flanges of sizes 24″ (609.6mm) and smaller will be bored to match Standard Wall Pipe unless otherwise specified.

(3) Bolt lengths for raised face flanges include allowance for orifice and gasket thickness of 0.25″ (7mm) for NPS 1–12 and 0.38″ (9.7mm) for sizes 14–24.

(4) Unless otherwise specified, unions of 1″ (25.4mm) thru 24″ (609.6mm) furnished with carbon steel regular square headed bolts with semifinished American Standard heavy series hex nuts.

CLASS 400 ORIFICE FLANGES

WELDING NECK (RAISED FACE)

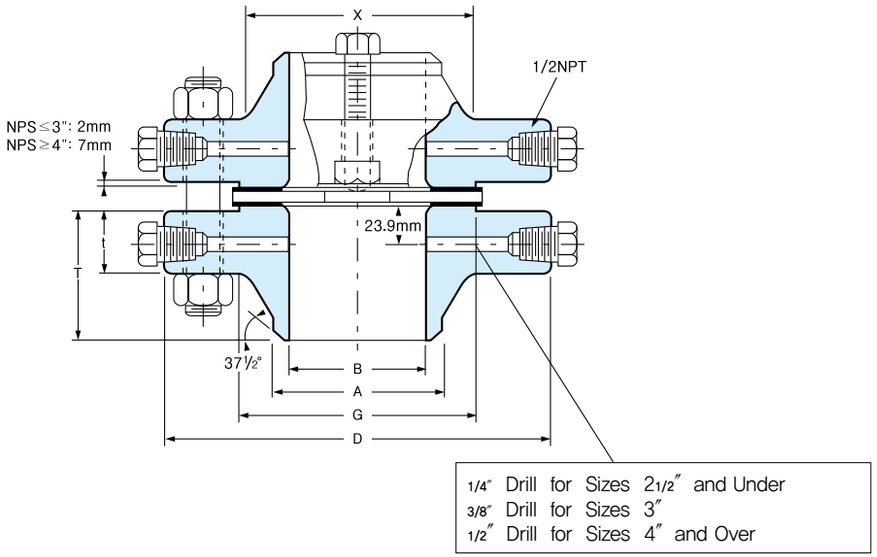

WELDING NECK (RING-TYPE JOINT)

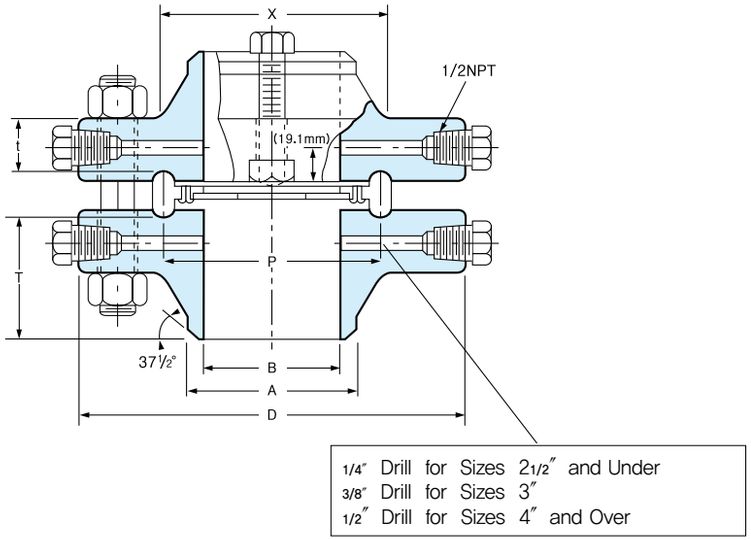

ASME B16.36 FORGED FLANGES

Unit : mm

Nominal Pipe Size	Outside Diam. of flange	THICKNESS OF FLANGE (t)		Diam. of Hub at Base	Diam. of Raised Face	Diam. of Hub at Bevel	LENGTH THRU HUB (T)		BORE (B)
							Welding Neck		Welding Neck
	D	Raised Face	Ring Joint	X	G	A	Raised Face	Ring Joint	
1	124	36.6	36.6	53.8	50.8	33.5	81.0	81.0	See Note(1) To be specified by purchaser
1 1/4	133	36.6	36.6	63.5	63.5	42.2	82.6	82.6	
1 1/2	155	36.6	36.6	69.9	73.2	48.3	84.3	84.3	
2	165	36.6	36.6	84.1	91.9	60.5	84.3	84.3	
2 1/2	191	36.6	36.6	100.1	104.6	73.2	87.4	87.4	
3	210	36.6	36.6	117.3	127.0	88.9	87.4	87.4	
4	254	38.1	38.1	146.1	157.2	114.3	88.9	88.9	
5	279	38.1	38.1	177.8	185.7	141.2	101.6	101.6	
6	318	41.1	41.1	206.2	215.9	168.4	103.1	103.1	
8	381	47.8	47.8	260.4	269.7	219.2	117.3	117.3	
10	445	53.8	53.8	320.5	323.9	273.1	124.0	124.0	
12	521	57.2	57.2	374.7	381.0	323.9	136.7	136.7	
14	584	60.7	60.7	425.5	412.8	355.6	149.4	149.4	
16	648	63.5	63.5	482.6	469.9	406.4	152.4	152.4	
18	711	66.5	66.5	533.4	533.4	457.2	165.1	165.1	
20	775	69.9	69.9	587.2	584.2	508.0	168.1	168.1	
24	914	76.2	76.2	701.5	692.2	609.6	174.8	174.8	

Unit : mm

Nominal Pipe Size	Pitch Diam. of Ring and Groove	Ring Number	DEPTH OF JACK SCREW SLOT		JACK SCREW SIZE		DRILLING TEMPLATE					
							Diam. of Bolt Circle	Number of Bolts	Diam. of Stud Bolts (inch)	Diam. of Bolt Holes	Length of Stud Bolts	
	P		Raised Face	Ring Joint	Raised Face (inch)	Ring Joint (inch)					Raised Face	Ring Joint
1	50.8	R 16	9.7	6.4	5/8×4.00	5/8×4.75	88.9	4	5/8	17.5	127.0	146.1
1 1/4	60.3	R 18	9.7	6.4	5/8×4.00	5/8×4.75	98.6	4	5/8	17.5	127.0	120.7
1 1/2	68.3	R 20	12.7	6.4	3/4×4.25	3/4×5.00	114.3	4	3/4	21.0	133.4	152.4
2	82.6	R 23	9.7	6.4	5/8×4.00	5/8×4.75	127.0	8	5/8	17.5	127.0	152.4
2 1/2	101.6	R 26	12.7	6.4	3/4×4.25	3/4×5.00	149.4	8	3/4	20.6	133.4	158.8
3	123.8	R 31	12.7	6.4	3/4×4.25	3/4×5.00	168.1	8	3/4	20.6	133.4	158.8
4	149.2	R 37	6.4	15.7	3/4×3.00	3/4×4.00	200.2	8	7/8	25.4	139.7	152.4
5	181.0	R 41	6.4	15.7	3/4×3.00	3/4×4.00	235.0	8	7/8	25.4	146.1	158.8
6	211.1	R 45	12.7	22.4	1×3.50	1×4.00	269.7	12	7/8	25.4	158.8	165.1
8	269.9	R 49	12.7	22.4	1×3.50	1×4.50	330.2	12	1	28.4	171.5	184.2
10	323.9	R 53	12.7	22.4	1×4.00	1×4.50	387.4	16	1 1/8	31.8	190.5	203.2
12	381.0	R 57	12.7	22.4	1×4.00	1×5.00	450.9	16	1 1/4	35.1	203.2	215.9
14	419.1	R 61	12.7	22.4	1×4.25	1×5.00	514.4	20	1 1/4	35.1	209.6	228.6
16	469.9	R 65	12.7	22.4	1×4.25	1×5.00	571.5	20	1 3/8	38.1	222.3	235.0
18	533.4	R 69	12.7	22.4	1×4.50	1×5.00	628.7	24	1 3/8	38.1	235.0	241.3
20	584.2	R 73	12.7	22.4	1×4.75	1×5.50	685.8	24	1 1/2	41.1	247.7	260.4
24	692.2	R 77	12.7	22.4	1×5.00	1×6.00	812.8	24	1 3/4	47.8	279.4	292.1

Notes:

(1) For the inside diameter of pipes (corresponding to 'Bore' (B) of Welding Neck Flanges), refer to page 56~57.
(2) Class 400 flanges of size 3" and smaller will be furnished with 0.06" (2,mm) raised face.
(3) Each union includes two carbon steel jack screw bolts with hex nuts.
(4) Unless otherwise specified, raised face unions are furnished with alloy bolt studs per ASTM A193 Grade B7 with American Standard heavy series hex nuts ASTM A194 Class 2H.
(5) On ring joint flanges having a groove depth 0.375″ (9.5mm) and less, the distance from the center line of the tap hole to the flange face is 0.750″ (19.1mm) When the depth of groove is 0.438″ (11.1mm) or greater, changes in drill size or method of drilling are necessary.
(6) Bolt lengths for raised face flanges include allowance for orifice and gasket thickness of 0.25″ (6.4mm) for sizes 4–12 and 0.38″ (9.7mm) for sizes 14–24 Bolt lengths for ring type joint flanges include allowance of 0.62″ (15.7mm) for sizes 4–10, 0.75″ (19.1mm) for sizes 12–18 and 0.88″ (22.4mm) for size 20.

CLASS 600 ORIFICE FLANGES

WELDING NECK (RAISED FACE)

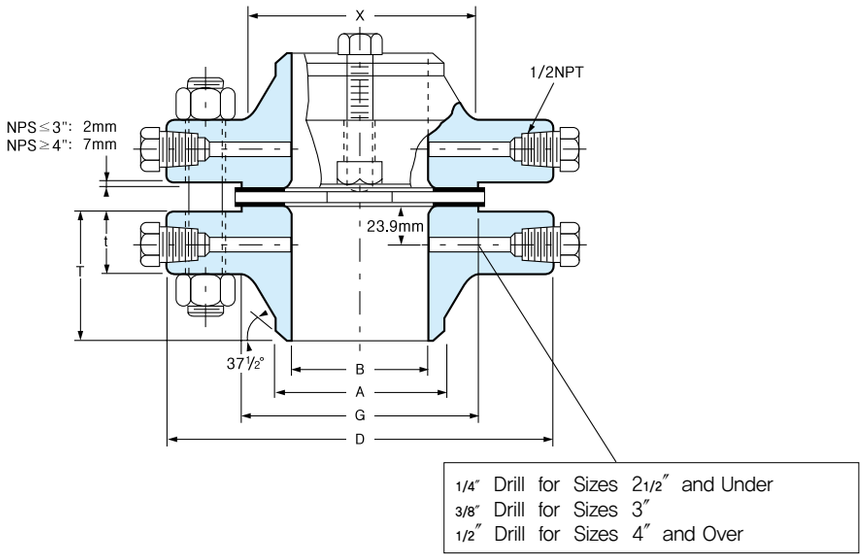

WELDING NECK (RING-TYPE JOINT)

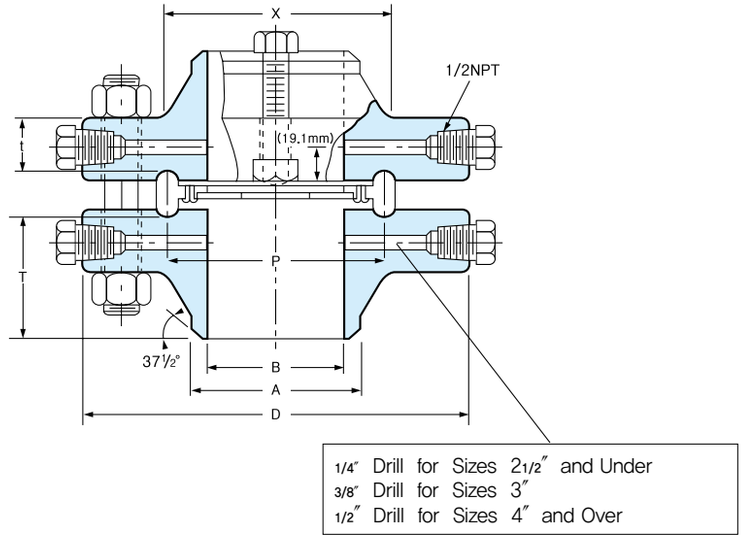

ASME B16.36 FORGED FLANGES

Unit : mm

Nominal Pipe Size	Outside Diam. of flange	THICKNESS OF FLANGE (t)		Diam. of Hub at Base	Diam. of Raised Face	Diam. of Hub at Bevel	LENGTH THRU HUB (T)		BORE (B)
							Welding Neck		Welding Neck
	D	Raised Face	Ring Joint	X	G	A	Raised Face	Ring Joint	
1	124	36.6	36.6	53.8	50.8	33.5	81.0	81.0	See Note(1) To be specified by purchaser
1 1/4	133	36.6	36.6	63.5	63.5	42.2	82.6	82.6	
1 1/2	155	36.6	36.6	69.9	73.2	48.3	84.3	84.3	
2	165	36.6	36.6	84.1	91.9	60.5	84.3	84.3	
2 1/2	191	36.6	36.6	100.1	104.6	73.2	87.4	87.4	
3	210	36.6	36.6	117.3	127.0	88.9	87.4	87.4	
4	273	38.1	38.1	152.4	157.2	114.3	101.6	101.6	
5	330	44.5	44.5	189.0	185.7	141.2	114.3	114.3	
6	356	47.8	47.8	222.3	215.9	168.4	117.3	117.3	
8	419	55.6	55.6	273.1	269.7	219.2	133.4	133.4	
10	508	63.5	63.5	342.9	323.9	273.1	152.4	152.4	
12	559	66.5	66.5	400.1	381.0	323.9	155.4	155.4	
14	603	69.9	69.9	431.8	412.8	355.6	165.1	165.1	
16	686	76.2	76.2	495.3	469.9	406.4	177.8	177.8	
18	743	82.6	82.6	546.1	533.4	457.2	184.2	184.2	
20	813	88.9	88.9	609.6	584.2	508.0	190.5	190.5	
24	940	101.6	101.6	717.6	692.2	609.6	203.2	203.2	

Unit : mm

Nominal Pipe Size	Pitch Diam. of Ring and Groove	Ring Number	DEPTH OF JACK SCREW SLOT		JACK SCREW SIZE		DRILLING TEMPLATE						
							Diam. of Bolt Circle	Number of Bolts	Diam. of Stud Bolts (inch)	Diam. of Bolt Holes		Length of Stud Bolts	
	P		Raised Face	Ring Joint	Raised Face (inch)	Ring Joint (inch)				RF	RTJ	Raised Face	Ring Joint
1	50.8	R 16	9.7	6.4	5/8×4.00	5/8×4.75	88.9	4	5/8	17.5	19.1	127.0	139.7
1 1/4	60.3	R 18	9.7	6.4	5/8×4.00	5/8×4.75	98.6	4	5/8	17.5	–	127.0	146.1
1 1/2	68.3	R 20	12.7	6.4	3/4×4.25	3/4×5.00	114.3	4	3/4	20.6	22.4	133.4	139.7
2	82.6	R 23	9.7	6.4	5/8×4.00	5/8×4.75	127.0	8	5/8	17.5	19.1	127.0	139.7
2 1/2	101.6	R 26	12.7	6.4	3/4×4.25	3/4×5.00	149.4	8	3/4	20.6	22.4	133.4	146.1
3	123.8	R 31	12.7	6.4	3/4×4.25	3/4×5.00	168.1	8	3/4	20.6	22.4	133.4	146.1
4	149.2	R 37	6.4	15.7	3/4×3.00	3/4×4.00	215.9	8	7/8	25.4	25.4	152.4	165.1
5	181.0	R 41	6.4	15.7	3/4×3.50	3/4×4.50	266.7	8	1	28.4	28.4	139.7	177.8
6	211.1	R 45	12.7	22.4	1×3.50	1×4.50	292.1	12	1	28.4	28.4	177.8	190.5
8	269.9	R 49	12.7	22.4	1×4.00	1×4.75	349.3	12	1 1/8	31.8	31.8	196.9	209.6
10	323.9	R 53	12.7	22.4	1×4.00	1×5.00	431.8	16	1 1/4	35.1	35.1	222.3	235.0
12	381.0	R 57	12.7	22.4	1×4.50	1×5.00	489.0	20	1 1/4	35.1	35.1	228.6	241.3
14	419.1	R 61	12.7	22.4	1×5.00	1×5.50	527.1	20	1 3/8	38.1	38.1	241.3	254.0
16	469.9	R 65	12.7	22.4	1×5.00	1×5.50	603.3	20	1 1/2	41.1	41.1	260.4	273.1
18	533.4	R 69	12.7	22.4	1×5.00	1×5.75	654.1	20	1 5/8	44.5	44.5	279.4	292.1
20	584.2	R 73	12.7	22.4	1×6.00	1×6.25	723.9	24	1 5/8	44.5	44.5	298.5	317.5
24	692.2	R 77	12.7	22.4	1×6.00	1×7.00	838.2	24	1 7/8	50.8	50.8	336.6	349.3

Notes:

(1) For the inside diameter of pipes (corresponding to 'Bore' (B) of Welding Neck Flanges), refer to page 56~57.
(2) Class 600 flanges of size 3" and smaller will be furnished with 0.06" (2,mm) raised face.
(3) Each union includes two carbon steel jack screw bolts with hex nuts.
(4) Bolt lengths for raised face flanges include allowance for orifice and gasket thickness of 0.25" (6.4mm) for sizes 1–12 and 0.38" (9.7mm) for sizes 14–24 Bolt lengths for ring type joint flanges include allowance of 0.62" (15.7mm) for sizes 1–10, 0.75" (19.1mm) for sizes 12–18 and 0.88" (22.4mm) for size 20.
(5) Unless otherwise specified, raised face unions are furnished with alloy bolt studs per ASTM A193 Grade B7 with American Standard heavy series hex nuts ASTM A194 Class 2H.
(6) On ring joint flanges having a groove depth 0.375" (9.5mm) and less, the distance from the center line of the tap hole to the flange face is 0.750" (19.1mm) When the depth of groove is 0.438" (11.1mm) or greater, changes in drill size or method of drilling are necessary.

CLASS 900–1500 ORIFICE FLANGES

WELDING NECK (RAISED FACE)

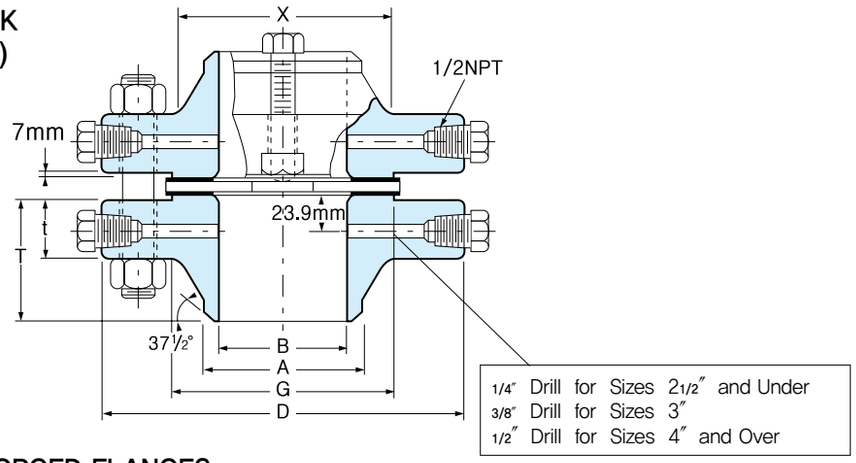

WELDING NECK (RING-TYPE JOINT)

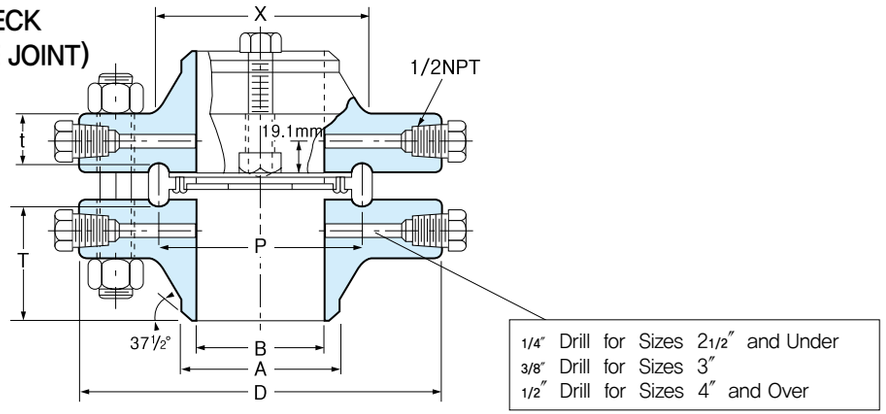

ASME B16.36 FORGED FLANGES

Unit : mm

Nominal Pipe Size	Outside Diam. of Flange	THICKNESS OF FLANGE (t)	Diam. of Hub at Base	Diam. of Raised Face	Diam. of Hub at Bevel	LENGTH THRU HUB (T)	BORE (B)
						Welding Neck	
	D	Raised Face	X	G	A	Raised Face	Welding Neck
CLASS 900							
3	241	38.1	127.0	127.0	88.9	101.6	To be specified by purchaser
4	292	44.5	158.8	157.2	114.3	114.3	
5	349	50.8	190.5	185.7	141.2	127.0	
6	381	55.6	235.0	215.9	168.4	139.7	
8	470	63.5	298.5	269.7	219.2	162.1	
10	546	69.9	368.3	323.9	273.1	184.2	
12	610	79.2	419.1	381.0	323.9	200.2	
14	641	85.9	450.9	412.8	355.6	212.9	
16	705	88.9	508.0	469.9	406.4	215.9	
18	787	101.6	565.2	533.4	457.2	228.6	
20	857	108.0	622.3	584.2	508.0	247.7	
24	1041	139.7	749.3	692.2	609.6	292.1	
CLASS 1500							
1	149	38.1	52.3	50.8	33.5	82.6	To be specified by purchaser
1 1/4	159	35.1	63.5	63.5	42.2	73.2	
1 1/2	178	38.1	69.9	73.2	48.3	88.9	
2	216	38.1	104.6	91.9	60.5	101.6	
2 1/2	244	41.1	124.0	104.6	73.2	104.6	
3	267	47.8	133.4	127.0	88.9	117.3	
4	311	53.8	162.1	157.2	114.3	124.0	
5	375	73.2	196.9	185.7	141.2	155.4	
6	394	82.6	228.6	215.9	168.4	171.5	
8	483	91.9	292.1	269.7	219.2	212.9	
10	584	108.0	368.3	323.9	273.1	254.0	
12	673	124.0	450.9	381.0	323.9	282.4	
14	749	133.4	495.3	412.8	355.6	298.5	
16	826	146.1	552.5	469.9	406.4	311.2	
18	914	162.1	596.9	533.4	457.2	327.2	
20	984	177.8	641.4	584.2	508.0	355.6	
24	1168	203.2	762.0	692.2	609.6	406.4	

Unit : mm

Nominal Pipe Size	Pitch Diam. of Ring and Groove	Ring Number	DEPTH OF JACK SCREW SLOT		JACK SCREW SIZE		DRILLING TEMPLATE					
							Diam. of Bolt Circle	Number of Bolts	Diam. of Stud Bolts (inch)	Diam. of Bolt Holes	Length of Stud Bolts	
	P		Raised Face	Ring Joint	Raised Face (inch)	Ring Joint (inch)					Raised Face	Ring Joint
CLASS 900												
3	123.8	R 31	9.7	15.7	3/4×3.50	3/4×4.00	190.5	8	7/8	25.4	152.4	165.1
4	149.2	R 37	9.7	15.7	3/4×3.50	3/4×4.50	235.0	8	1 1/8	31.8	177.8	190.5
5	181.0	R 41	9.7	15.7	3/4×3.50	3/4×4.50	279.4	8	1 1/4	35.1	190.5	203.2
6	211.1	R 45	15.7	22.4	1×4.50	1×4.75	317.5	12	1 1/8	31.8	196.9	209.6
8	269.9	R 49	15.7	22.4	1×4.50	1×5.00	393.7	12	1 3/8	38.1	228.6	241.3
10	323.9	R 53	15.7	22.4	1×4.50	1×5.25	469.9	16	1 3/8	38.1	241.3	254.0
12	381.0	R 57	15.7	22.4	1×4.50	1×5.50	533.4	20	1 3/8	38.1	260.4	273.1
14	419.1	R 62					558.8	20	1 1/2	41.1	279.4	292.1
16	469.9	R 66					616.0	20	1 5/8	44.5	292.1	304.8
18	533.4	R 70					685.8	20	1 7/8	50.8	330.2	349.3
20	584.2	R 74					749.3	20	2	53.8	355.6	374.7
24	692.2	R 78					901.7	20	2 1/2	66.5	444.5	469.9
CLASS 1500												
1	50.8	R 16	6.4	12.7	5/8×3.00	5/8×3.50	101.6	4	7/8	25.4	152.4	158.8
1 1/4	60.3	R 18	6.4	12.7	5/8×3.00	5/8×3.50	111.3	4	7/8	25.4	139.7	146.1
1 1/2	68.3	R 20	6.4	12.7	5/8×3.00	5/8×3.50	124.0	4	1	28.4	158.8	165.1
2	95.3	R 24	6.4	12.7	5/8×3.00	5/8×4.00	165.1	8	7/8	25.4	152.4	165.1
2 1/2	108.0	R 27	6.4	12.7	5/8×3.00	5/8×4.00	190.5	8	1	28.4	165.1	177.8
3	136.5	R 35	9.7	15.7	5/8×3.50	3/4×4.50	203.2	8	1 1/8	31.8	184.2	184.2
4	161.9	R 39	9.7	15.7	3/4×3.50	3/4×4.50	241.3	8	1 1/4	35.1	203.2	215.9
5	193.7	R 44	9.7	15.7	3/4×3.50	3/4×4.50	292.1	8	1 1/2	41.1	247.7	260.4
6	211.1	R 46	15.8	22.4	1×6.00	1×6.50	317.5	12	1 3/8	38.1	266.7	279.4
8	269.9	R 50	15.7	22.4	1×6.50	1×6.50	393.7	12	1 5/8	44.5	298.5	311.2
10	323.9	R 54	15.7	22.4	1×6.50	1×7.00	482.6	12	1 7/8	50.8	342.9	355.6
12	381.0	R 58	15.7	22.4	1×6.50	1×8.00	571.5	16	2	53.8	381.0	400.1
14	419.1	R 63					635.0	16	2 1/4	60.5	412.8	445.0
16	469.9	R 67					704.9	16	2 1/2	66.5	450.9	482.6
18	533.4	R 71					774.7	16	2 3/4	73.2	501.7	533.4
20	584.2	R 75					831.9	16	3	79.2	546.1	571.5
24	692.2	R 79					990.6	16	3 1/2	91.9	622.3	660.4

Notes:

(1) For the inside diameter of pipes (corresponding to 'Bore' (B) of Welding Neck Flanges), refer to page 56~57.
(2) Class 900 dimensions of sizes 1″ (25.4mm) through 21/2″ are the same as for Class 1500.
(3) Each union includes two carbon steel jack screw bolts with hex nuts.
(4) Unless otherwise specified, raised face unions are furnished with alloy bolt studs per ASTM A193 Grade B7 with American Standard heavy series hex nuts ASTM A194 Class 2H.
(5) On ring joint flanges having a groove depth 0.375″ (9.5mm) and less, the distance from the center line of the tap hole to the flange face is 0.750″ (19.1mm) When the depth of groove is 0.438″ (11.1mm) or greater, changes in drill size or method of drilling are necessary.
(6) Bolt lengths for raised face flanges include allowance for orifice and gasket thickness of 0.25″ (7mm) for sizes 3–12 and 0.38″ (9.7mm) for sizes 14–24. Bolt lengths for ring type joint flanges include allowance of 0.62″ (15.7mm) for sizes 3–10, And 0.75″ (19.1mm) for sizes 12. (CLASS 900)
(7) Bolt lengths for raised face flanges include allowance for orifice and gasket thickness of 0.25″ (7mm) for sizes 1–12 and 0.38″ (9.7mm) for sizes 14–24. Bolt lengths for ring type joint flanges include allowance of 0.62″ (15.7mm) for sizes 1–6 .(CLASS 1500)

CLASS 2500 ORIFICE FLANGES

WELDING NECK (RAISED FACE)

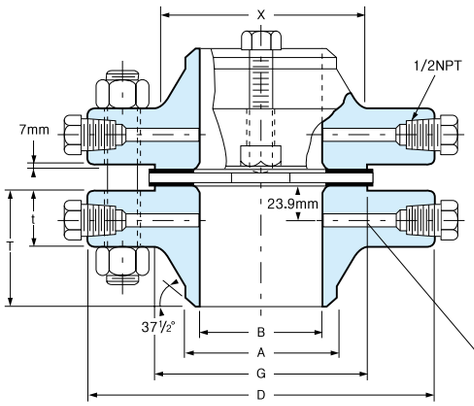

WELDING NECK (RING-TYPE JOINT)

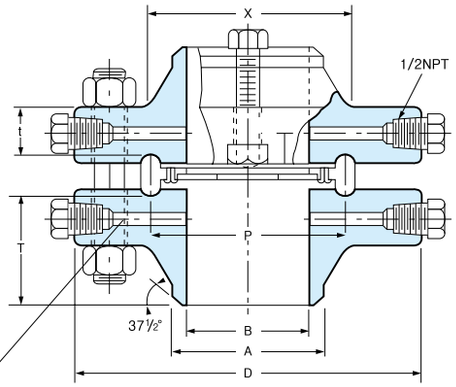

1/4″ Drill for Sizes 2½″ and Under
3/8″ Drill for Sizes 3″
1/2″ Drill for Sizes 4″ and Over

ASME B16.36 FORGED FLANGES

Unit : mm

Nominal Pipe Size	O.D. of Flange Face	O.D. of Raised Flange	THK'S of Flange Min	Length Thru Hub	Diam of Hub	Diam of Hub at Bevel	Bore	Ring Type Joint Pitch Diam.	Ring Number	DRILLING TEMPLATE Diam. Bolt Circle	Number of Holes	Diam. of Holes	Diam. of Bolt (inch)	LENGTH OF STUD BOLTS Raised Face	Ring Joint
	D	G	t	T	X	A	B	P							
1	159	50.8	38.1	91.9	57.2	33.5	See Note(1) To be specified by purchaser	60.3	R 18	108.0	4	25.4	7/8	152.4	158.8
1 1/2	203	73.2	44.5	111.3	79.2	48.3		82.6	R 23	146.1	4	31.8	1 1/8	177.8	190.5
2	235	91.9	50.8	127.0	95.3	60.5		101.6	R 26	171.5	8	28.4	1 1/8	184.2	196.9
2 1/2	267	104.6	57.2	142.7	114.3	73.2		111.1	R 28	196.9	8	31.8	1 1/8	203.2	215.9
3	305	127.0	66.5	168.1	133.4	88.9		127.0	R 32	228.6	8	35.1	1 1/4	228.6	241.3
4	356	157.2	76.2	190.5	165.1	114.3		157.2	R 38	273.1	8	41.1	1 1/2	260.4	273.1
6	483	215.9	108.0	273.1	235.0	168.4		228.6	R 47	368.3	8	53.8	2	349.3	368.3
8	552	269.7	127.0	317.5	304.8	219.2		279.4	R 51	438.2	12	53.8	2	387.4	406.4
10	673	323.9	165.1	419.1	374.7	273.1		342.9	R 55	539.8	12	66.5	2 1/2	489.0	514.4
12	762	381.0	184.2	463.6	441.5	323.9		406.4	R 60	619.3	12	73.2	2 3/4	539.8	571.5

Notes:

(1) For the inside diameter of pipes (corresponding to 'Bore' (B) of Welding Neck Flanges), refer to page 56~57.
(2) Each union includes two carbon steel jack screw bolts with hex nuts.
(3) Unless otherwise specified, raised face unions are furnished with alloy bolt studs per ASTM A193 Grade B7 with American Standard heavy series hex nuts ASTM A194 Class 2H.
(4) On ring joint flanges having a groove depth 0.375″ (9.5mm) and less, the distance from the center line of the tap hole to the flange face is 0.750″ (19.1mm) When the depth of groove is 0.438″ (11.1mm) or greater, changes in drill size or method of drilling are necessary.
(5) Class 2500 Slip-on flanges are not covered by B16.5.
(6) Bolt lengths for raised face flanges include allowance for orifice and gasket thickness of 0.25″ (6.4mm) for sizes 1-12. Bolt lengths for ring type joint flanges include allowance of 0.62″ (15.7mm) for sizes 1-3.

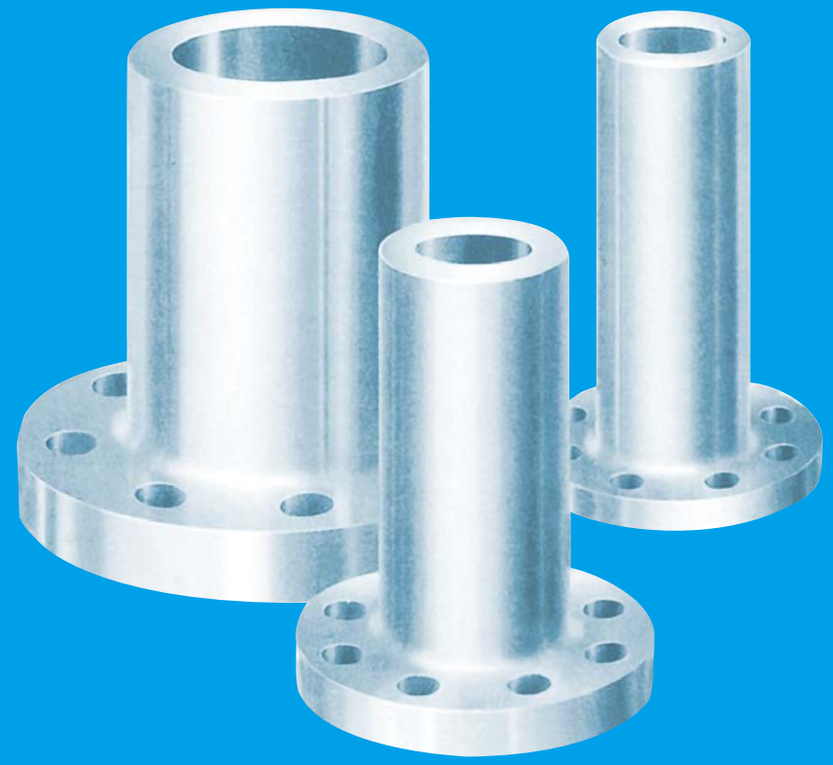

LONG WELDING NECKS FLANGES

Class 150 Flanges
Class 300 Flanges
Class 400 Flanges
Class 600 Flanges
Class 900 Flanges
Class 1500 Flanges
Class 2500 Flanges

CLASS 150 FLANGES LONG WELDING NECK

(tolerance : 3mm~0)

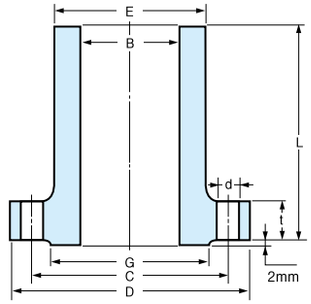

Unit : mm

Nominal Pipe Size	Out side Diameter	Hub Diameter at Bevel	O. D. of Raised Face	Diameter of Bore	Thickness of Flange Min.	Length Through Hub	DRILLING		
							Diameter of Bolt Circle	Number of Holes	Diameter of Holes
	D	E	G	B	t	L	C		d
1/2	89	30.2	35.1	12.7	9.7	229	60.5	4	15.9
3/4	99	38.1	42.9	19.1	11.2	229	69.9	4	15.9
1	108	49.3	50.8	25.4	12.7	229	79.2	4	15.9
1 1/4	117	58.7	63.5	31.8	14.1	229	88.9	4	15.9
1 1/2	127	65.0	73.2	38.1	15.7	229	98.6	4	15.9
2	152	77.7	91.9	50.8	17.5	229	120.7	4	19.1
2 1/2	178	90.4	104.6	63.5	20.6	229	139.7	4	19.1
3	191	108.0	127.0	76.2	22.4	229	152.4	4	19.1
3 1/2	216	122.2	139.7	88.9	22.4	229	177.8	8	19.1
4	229	134.9	157.2	101.6	22.4	229	190.5	8	19.1
5	254	163.6	185.7	127.0	22.4	305	215.9	8	22.2
6	279	192.0	215.9	152.4	23.9	305	241.3	8	22.2
8	343	246.1	269.7	203.2	26.9	305	298.5	8	22.2
10	406	304.8	323.9	254.0	28.4	305	362.0	12	25.4
12	483	365.3	381.0	304.8	30.2	305	431.8	12	25.4
14	533	400.1	412.8	355.6	33.3	305	476.3	12	28.6
16	597	457.2	469.9	406.4	35.1	305	539.8	16	28.6
18	635	505.0	533.4	457.2	38.1	305	577.9	16	31.8
20	699	558.8	584.2	508.0	41.1	305	635.0	20	31.8
24	813	663.4	692.2	609.6	46.1	305	749.3	20	34.9

CLASS 300 FLANGES LONG WELDING NECK

Unit : mm

Nominal Pipe Size	Out side Diameter	Hub Diameter at Bevel	O. D. of Raised Face	Thickness of Flange Min.	Diameter of Bore	Length Through Hub	DRILLING		
							Diameter of Bolt Circle	Number of Holes	Diameter of Holes
	D	E	G	t	B	L	C		d
1/2	95	38.1	35.1	12.7	12.7	229	66.5	4	15.9
3/4	117	47.8	42.9	14.2	19.1	229	82.6	4	19.1
1	124	53.8	50.8	15.7	25.4	229	88.9	4	19.1
1 1/4	133	63.5	63.5	17.5	31.8	229	98.6	4	19.1
1 1/2	155	69.9	73.2	19.1	38.1	229	114.3	4	22.2
2	165	84.1	91.9	20.6	50.8	229	127.0	8	19.1
2 1/2	191	100.1	104.6	23.9	63.5	229	149.4	8	22.2
3	210	117.3	127.0	26.9	76.2	229	168.1	8	22.2
3 1/2	229	133.4	139.7	28.4	88.9	229	184.2	8	22.2
4	254	146.1	157.2	30.2	101.6	229	200.2	8	22.2
5	279	177.8	185.7	33.3	127.0	305	235.0	8	22.2
6	318	206.2	215.9	35.1	152.4	305	269.7	12	22.2
8	381	260.4	269.7	39.6	203.2	305	330.2	12	25.4
10	445	320.5	323.9	46.0	254.0	305	387.4	16	28.6
12	521	374.7	381.0	49.3	304.8	305	450.9	16	31.8
14	584	425.5	412.8	52.3	355.6	305	514.4	20	31.8
16	648	482.6	469.9	55.6	406.4	305	571.5	20	34.9
18	711	533.4	533.4	58.7	457.2	305	628.7	24	34.9
20	775	587.2	584.2	62.0	508.0	305	685.8	24	34.9
24	914	701.5	692.2	68.3	609.6	305	812.8	24	41.3

Notes:

(1) The bore diameter shall be equal to B dimension of the welding neck flange. Other bores may be furnished by agreement between the end user and manufacturer. In no case shall the bore diameter exceed the bore of the same size and class lapped flange.

(2) Welding necks longer than listed are available in all sizes on special order.

CLASS 400 FLANGES LONG WELDING NECK

(tolerance : 3mm~0)

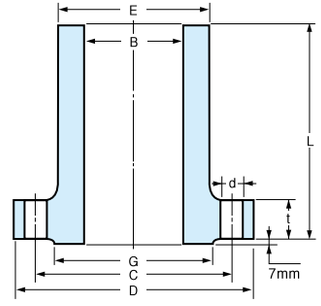

Unit : mm

Nominal Pipe Size	Out side Diameter	Hub Diameter at Bevel	O. D. of Raised Face	Diameter of Bore	Thickness of Flange Min.	Length Through Hub	DRILLING		
							Diameter of Bolt Circle	Number of Holes	Diameter of Holes
	D	E	G	B	t	L	C		d
1 1 1/4 1 1/2 2 2 1/2 3 3 1/2	Use Class 600 dimensions in these sizes.								
4	254	146.1	157.2	101.6	35.1	229	200.2	8	25.4
5	279	177.8	185.7	127.0	38.1	305	235.0	8	25.4
6	318	206.2	215.9	152.4	41.1	305	269.7	12	25.4
8	381	260.4	269.7	203.2	47.8	305	330.2	12	28.6
10	445	320.5	323.9	254.0	53.8	305	387.4	16	31.8
12	521	374.7	381.0	304.8	57.2	305	450.9	16	34.9
14	584	425.5	412.8	355.6	60.5	305	514.4	20	34.9
16	648	482.6	469.9	406.4	63.5	305	571.5	20	38.1
18	711	533.4	533.4	457.2	66.5	305	628.7	24	38.1
20	775	587.2	584.2	508.0	69.9	305	685.8	24	41.3
24	914	701.5	692.2	609.6	76.2	305	812.8	24	47.6

CLASS 600 FLANGES LONG WELDING NECK

Unit : mm

Nominal Pipe Size	Out side Diameter	Hub Diameter at Bevel	O. D. of Raised Face	Diameter of Bore	Thickness of Flange Min.	Length Through Hub	DRILLING		
							Diameter of Bolt Circle	Number of Holes	Diameter of Holes
	D	E	G	B	t	L	C		d
1	124	53.8	50.8	25.4	17.5	229	88.9	4	19.1
1 1/4	133	63.5	63.5	31.8	20.6	229	98.6	4	19.1
1 1/2	155	69.9	73.2	38.1	22.4	229	114.3	4	22.2
2	165	84.1	91.9	50.8	25.4	229	127.0	8	19.1
2 1/2	191	100.1	104.6	63.5	28.4	229	149.4	8	22.2
3	210	117.3	127.0	76.2	31.8	229	168.1	8	22.2
3 1/2	229	133.4	139.7	88.9	35.1	229	184.2	8	25.4
4	273	152.4	157.2	101.6	38.1	229	215.9	8	25.4
5	330	189.0	185.7	127.0	44.5	305	266.7	8	28.6
6	356	222.3	215.9	152.4	47.8	305	292.1	12	28.6
8	419	273.1	269.7	203.2	55.6	305	349.3	12	31.8
10	508	342.9	323.9	254.0	63.5	305	431.8	16	34.9
12	559	400.1	381.0	304.8	66.5	305	489.0	20	34.9
14	603	431.8	412.8	355.6	69.9	305	527.1	20	38.1
16	686	495.3	469.9	406.4	76.2	305	603.3	20	41.3
18	743	546.1	533.4	457.2	82.6	305	654.1	20	44.5
20	813	609.6	584.2	508.0	88.9	305	723.9	24	44.5
24	940	717.6	692.2	609.6	101.6	305	838.2	24	50.8

Notes:

(1) The bore diameter shall be equal to B dimension of the welding neck flange. Other bores may be furnished by agreement between the end user and manufacturer. In no case shall the bore diameter exceed the bore of the same size and class lapped flange.

(2) Welding necks longer than listed are available in all sizes on special order.

CLASS 900 FLANGES LONG WELDING NECK

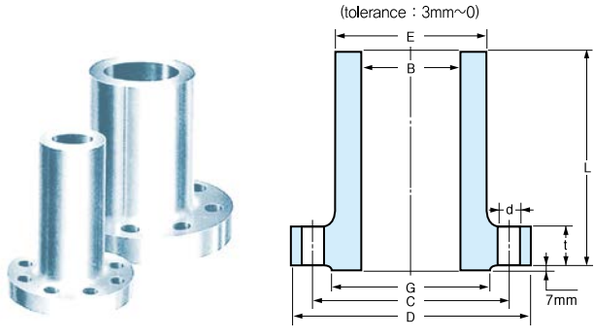

Unit : mm

Nominal Pipe Size	Out side Diameter	Hub Diameter at Bevel	O. D. of Raised Face	Diameter of Bore	Thickness of Flange Min.	Length Through Hub	DRILLING		
							Diameter of Bolt Circle	Number of Holes	Diameter of Holes
	D	E	G	B	t	L	C		d
1	Use Class 1500 dimensions in these sizes.								
1 1/4									
1 1/2									
2									
2 1/2									
3	241	127.0	127.0	76.2	38.1	229	190.5	8	25.4
4	292	158.8	157.2	101.6	44.5	229	235.0	8	31.8
5	349	190.5	185.7	127.0	50.8	305	279.4	8	34.9
6	381	235.0	215.9	152.4	55.6	305	317.5	12	31.8
8	470	298.5	269.7	203.2	63.5	305	393.7	12	38.1
10	546	368.3	323.9	254.0	69.9	305	469.9	16	38.1
12	610	419.1	381.0	304.8	79.2	305	533.4	20	38.1
14	641	450.9	412.8	355.6	85.9	305	558.8	20	41.3
16	705	508.0	469.9	406.4	88.9	305	616.0	20	44.5
18	787	565.2	533.4	457.2	101.6	305	685.8	20	50.8
20	857	622.3	584.2	508.0	108.0	305	749.3	20	54.0
24	1041	749.3	692.2	609.6	139.7	305	901.7	20	66.7

CLASS 1500 FLANGES LONG WELDING NECK

Unit : mm

Nominal Pipe Size	Out side Diameter	Hub Diameter at Bevel	O. D. of Raised Face	Diameter of Bore	Thickness of Flange Min.	Length Through Hub	DRILLING		
							Diameter of Bolt Circle	Number of Holes	Diameter of Holes
	D	E	G	B	t	L	C		d
1	149	52.3	50.8	25.4	28.4	229	101.6	4	25.4
1 1/4	159	63.5	63.5	31.8	28.4	229	111.3	4	25.4
1 1/2	178	69.9	73.2	38.1	31.8	229	124.0	4	28.6
2	216	104.6	91.9	50.8	38.1	229	165.1	8	25.4
2 1/2	244	124.0	104.6	63.5	41.1	229	190.5	8	28.6
3	267	133.4	127.0	76.2	47.8	229	203.2	8	31.8
4	311	162.1	157.2	101.6	53.8	229	241.3	8	34.9
5	375	196.9	185.7	127.0	73.2	305	292.1	8	41.3
6	394	228.6	215.9	152.4	82.6	305	317.5	12	38.1
8	483	292.1	269.7	203.2	91.9	305	393.7	12	44.5
10	584	368.3	323.9	254.0	108.0	305	482.6	12	50.8
12	673	450.9	381.0	304.8	124.0	305	571.5	16	54.0
14	749	495.3	412.8	355.6	133.4	305	635.0	16	60.3
16	826	552.5	469.9	406.4	146.1	305	704.9	16	66.7
18	914	596.9	533.4	457.2	162.1	305	774.7	16	73.0
20	984	641.4	584.2	508.0	177.8	305	831.9	16	79.4
24	1168	762.0	692.2	609.6	203.2	305	990.6	16	92.1

Notes:

(1) The bore diameter shall be equal to B dimension of the welding neck flange. Other bores may be furnished by agreement between the end user and manufacturer. In no case shall the bore diameter exceed the bore of the same size and class lapped flange.

(2) Welding necks longer than listed are available in all sizes on special order.

CLASS 2500 FLANGES LONG WELDING NECK

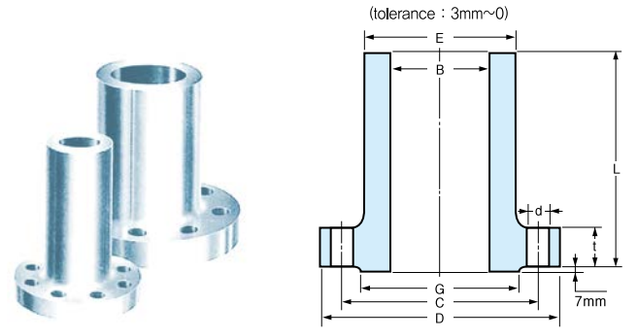

Unit : mm

Nominal Pipe Size	Out side Diameter	Hub Diameter at Bevel	O. D. of Raised Face	Diameter of Bore	Thickness of Flange Min.	Length Through Hub	DRILLING		
							Diameter of Bolt Circle	Number of Holes	Diameter of Holes
	D	E	G	B	t	L	C		d
1	159	57.2	50.8	25.4	35.1	229	108.0	4	25.4
1 1/4	184	73.2	63.5	31.8	38.1	229	130.0	4	28.6
1 1/2	203	79.2	73.2	38.1	44.5	229	146.1	4	31.8
2	235	95.3	91.9	50.8	50.8	229	171.5	8	28.6
2 1/2	267	114.3	104.6	63.5	57.2	229	196.9	8	31.8
3	305	133.4	127.0	76.2	66.5	229	228.6	8	34.9
4	356	165.1	157.2	101.6	76.2	229	273.1	8	41.3
5	419	203.2	185.7	127.0	91.9	305	323.9	8	47.6
6	483	235.0	215.9	152.4	108.0	305	368.3	8	54.0
8	552	304.8	269.7	203.2	127.0	305	438.2	12	54.0
10	673	374.7	323.9	254.0	165.1	305	539.8	12	66.7
12	762	441.5	381.0	304.8	184.2	305	619.3	12	73.0

GUIDE TO MATERIAL LAYOUT & SPECIFICATIONS

Unit : mm

Pipe	Weld Fittings	Screwed & Socket Fittings	Flanges	Valves
A 53	A 234 WPB	A 105, A 181 Gr. 60 or 70	A 105, A 181 Gr. 60 or 70	A 105, A 216 WCB
A 106B	A 234 WPB	A 105, A 181 Gr. 60 or 70	A 105, A 181 Gr. 60 or 70	A 105, A 216 WCB
A 312 T304	A 403 WP-304	A 182 F 304	A 182 F 304	A 182 F 304 CMO
A 312 T316	A 403 WP-316	A 182 F 316	A 182 F 316	A 182 F 316 CM 8MO
A 333 Gr.1or6	A 420 WPL1&6	A 350 LF 1	A 350 LF 1	A 350 LF 1, A 352 LCB
A 333 Gr.3	A 420 WPL-3	A 350 LF 3	A 350 LF 3	A 350 LF 3, A 352 LC3
A 335 P-1	A 234 WP-1	A 182 F 1	A 182 F 1	A 217 WC 6
A 335 P-11	A 234 WP-11	A 182 F 11	A 182 F 11	A 182 F 11, A 217 WC 6
A 335 P-12	A 234 WP-12	A 182 F 12	A 182 F 12	A 217 WC 6
A 335 P-22	A 234 WP-22	A 182 F 22	A 182 F 22	A 182 F 22, A 217 WC 9
A 335 P-5	A 234 WP-5	A 182 F 5	A 182 F 5	A 182 F 5, A 216 WC 5
A 335 P-7	A 234 WP-7	A 182 F 7	A 182 F 7	A 182 F 7, A 217 WC 12
A 335 P-9	A 234 WP-9	A 182 F 9	A 182 F 9	A 182 F 9, A 217 WC 12

Notes:

(1) The bore diameter shall be equal to B dimension of the welding neck flange. Other bores may be furnished by agreement between the end user and manufacturer. In no case shall the bore diameter exceed the bore of the same size and class lapped flange.

(2) Welding necks longer than listed are available in all sizes on special order.

STANDARD FINISHES for Face of Flange (ASME B16.5)

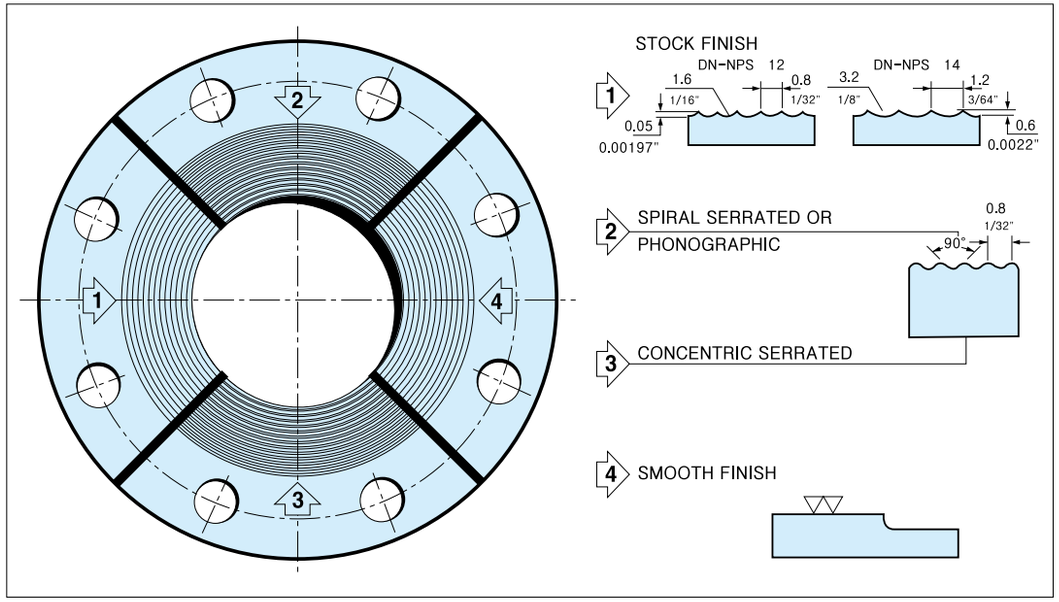

STOCK FINISH : The most widely used of any gasket finish, because practically, is suitable for all ordinary service conditions. This is a continuous spiral groove. Flanges sizes 12″ (304.8mm) and smaller are produced with a 1/16″ round-nosed tool at a feed of 1/32″ per revolution. For sizes 14″ (355.6mm) and larger, the finish is made with 1/8″ round-nosed tool at a feed of 3/64″ per revolution.

SPIRAL SERRATED OR PHONOGRAPHIC : This finish is produced by using a 90° round-nosed tool.

CONCENTRIC SERRATED : This finish is produced by using a 90° round-nosed tool.

SMOOTH FINISH : The cutting tool employed shall have an approximate 0.06″ radius.
The resultant surface finish shall have a 125μ inch to 250μ inch (ANSI B16.5 para 6.4.5)

1. RAISED FACE, AND LARGE MALE AND FEMALE

Either a serrated-concentric or serrated-spiral finish having from 45 to 55 grooves per inch is used. The cutting tool employed has an approximate 0.06 in radius. The resultant surface finish shall have a 125μ inch (3.2μ m) to 250μ inch (6.4μ m) approximate roughness.

2. TONGUE AND GROOVE, AND SMALL MALE AND FEMALE

The gasket contact surface does not exceed 125μ in, (3.2μ m) roughness.

3. RING JOINT

The inside wall surface of gasket groove does not exceed 63μ in, (1.6μ m) roughness.

4. BLIND

Blind flanges need not be faced in the center if when this center part is raised its diameter is at least 1 in. smaller than the inside diameter of fittings of the corresponding pressure class. When the center part is depressed, its diameter is not greater than the inside diameter of the corresponding pressure class fittings. Machining of the derpressed center is not required.

ASME B16.5 FORGED FLANGES

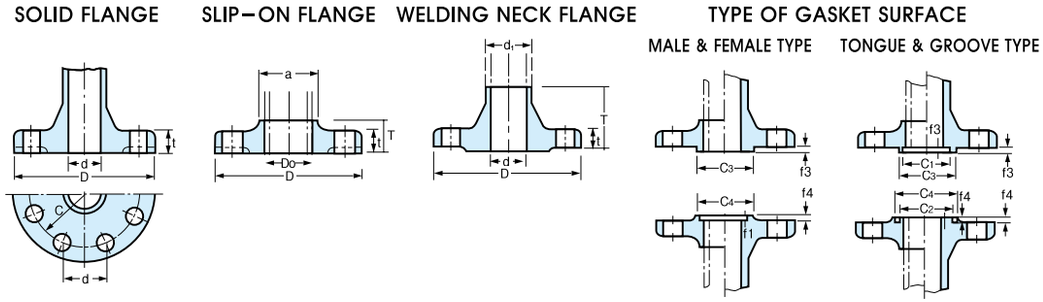

THREAD, SOCKET-WELDING, SLIP-ON, LAP JOINT AND BLIND.

Outside Diameter	When O.D. is 24″ or less	±1/16″ (1.6mm)*
	When O.D. is Over 24″	±1/8″ (3.2mm)*
Inside Diameter	Threaded	Within limits on boring gauge
	Socket-Welding, Slip-on and Lap joint (2″ below)	10″ & Smaller +0.03″ (0.8mm), -0″ 12″ & Larger +0.06″ (1.6mm), -0″
Outside Diameter of Hub	5″ and Smaller	+0.09″ (2.3mm)* -0.03″ (0.8mm)
	6″ and Larger	+0.16″ (4.0mm) -0.03″ (0.8mm)
Diameter of Contact Face	1/16″ Raised Face	±0.03″ (0.8mm)
	1/4″ Raised Face Tongue & Groove Male, Female	±0.02″ (0.5mm)
Diameter of Counterbore	Same as for Inside Diameter 1/2≤NPS≤3 ±0.25mm(0.01″)Socket Welding	
Drilling	Bolt Circle	±0.06″ (1.6mm)
	Bolt Hole Spacing	±0.03″ (0.8mm)*
	Bolt Circle Concentricity	2 1/2″ Smaller 0.03″ (0.8mm) Max. 3″ & Larger 0.06″ (1.6mm) Max.
	Bolt hole to bolt hole	±0.03″ (0.8mm)
	Eccentricity of Bolt Circle with Respect to bore	1/32″ (0.8mm) Max.*
	Eccentricity of Facing with Respect to Bore	1/32″ (0.8mm) Max.*
Thickness	18″ and Smaller	+0.12″ (3mm), -0″
	20″ and Larger	+0.19″ (5mm), -0″
Length Thru Hub	10″ and Smaller	±1/16″ (1.6mm)
	12″ and Larger	±1/8″ (3.2mm)

Note: *This tolerance is not covered in ASME B16.5, but maker′ s option.

WELDING NECK

Outside Diameter	When O.D. is 24″ or less	±1/16″(1.6mm)★
	When O.D. is Over 24″	±1/8″(3.2mm)★
Inside Diameter	10″ and Smaller	±0.03″(0.8mm)
	12″ thru 18″	±0.06″(1.6mm)
	20″ and Larger	+0.12″(3mm) -0.06″(1.6mm)
Diameter of Contact Face	1/16″ Raised Face	±0.03″(0.8mm)
	1/4″ Raised Face Tongue & Groove Male, Female	±0.02″(0.5mm)
		±1/16″(1.6mm)*
Diameter of Hub at Base	When Hub Base is 24″ or Smaller	±1/16″(1.6mm)*
	When Hub Base is Over 24″	±1/8″(3.2mm)*
Diameter of Hub at Point of Welding	5″ and Smaller	+0.09″(2.3mm) -0.03″(0.8mm)
	6″ and Larger	+0.16″(4.0mm) -0.03″(0.8mm)
Drilling	Bolt Circle	±0.06″(1.6mm)
	Bolt Hole Spacing	±0.03″(0.8mm)*
	Eccentricity of Bolt Circle with Respect to Facing	2 1/2″ & Smaller 0.03″(0.8mm) Max. 3″ & Larger 0.06″(1.6mm) Max.
	Eccentricity of Bolt Circle with Respect to Bore	1/32″(0.8mm) Max.*
	Eccentricity of Facing with Respect to Bore	1/32″ (0.8mm) Max.★
Thickness	18″ and Smaller	+0.12″ (3mm), -0″
	20″ and Larger	+0.19″ (5mm), -0″
Length Thru Hub	NPS≤4 5≤NPS≤10″	±1.6mm(±0.06″) +1.6-3.0mm(+0.06-0.12″)
	12″ and Larger	+3.0-5.0mm (+0.12-0.18″)
Hub Thickness	87.5% under tolerance	

DIMENSIONS OF FLANGE FACINGS

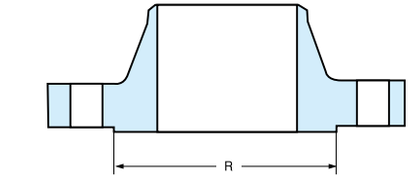

RAISED FACE

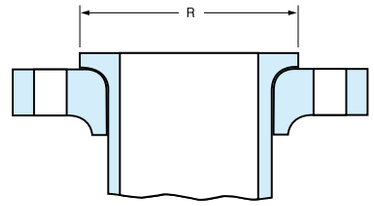

LAPPED JOINT

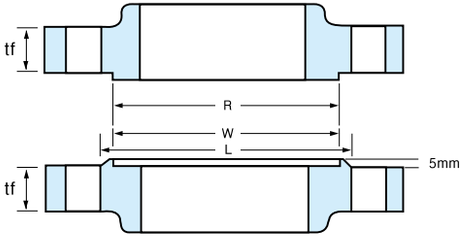

LARGE MALE–FEMALE

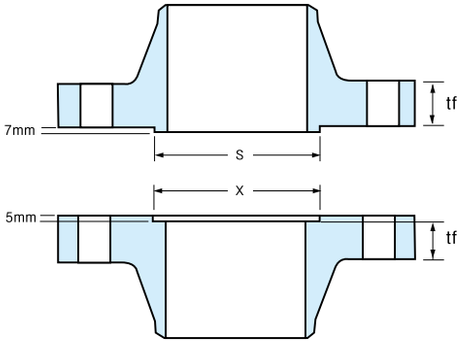

SMALL MALE AND FEMALE

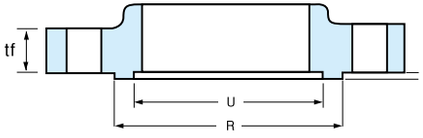

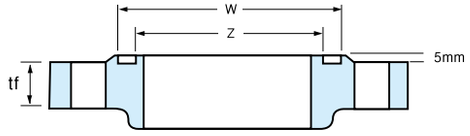

LARGE TONGUE AND GROOVE (±0.5mm ±0.02″)

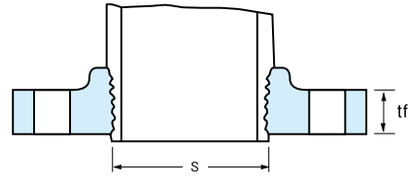

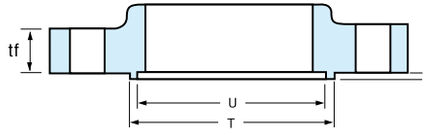

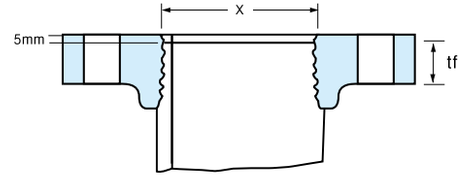

SMALL MALE AND FEMALE

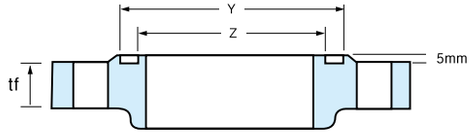

SMALL TONGUE AND GROOVE (±0.5mm ±0.02″)

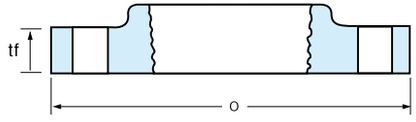

FLAT FACE

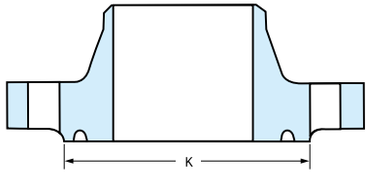

RING JOINT

CLASS 150 & 300RF | CLASS 400 & UPWARD RF | MALE | FEMALE | THREADED MALE | THREADED FEMALE | TONGUE | GROOVE | RING JOINT

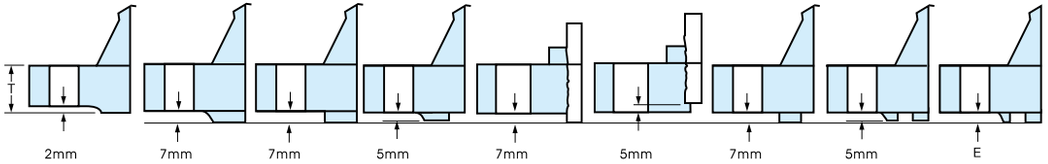

ASME B16.5 FORGED FLANGES

Unit : mm

Nominal Pipe Size	OUTSIDE DIAMETER			I.D. of Lager and Small Tongue	OUTSIDE DIAMETER				I.D. of Large and Small Groove	HEIGHT		Depth of Groove or Female
	Raised Face, Lapped Large Male and Large Tongue	Small Male	Small Tongue		Large Female and Large Groove		Small Female	Small Groove		Raised Face, and classes 150# &300#	Large and Small Male and Tongue Raised Face Classes 400# 2500#	
	R	S	T	U	W	L	X	Y	Z			
1/2	35.1	18.3	35.1	25.4	36.6	46.0	19.8	36.6	23.9	2.0	7.0	5.0
3/4	42.9	23.9	42.9	33.3	44.5	53.8	25.4	44.5	31.8	2.0	7.0	5.0
1	50.8	30.2	47.8	38.1	52.3	62.0	31.8	49.3	36.6	2.0	7.0	5.0
1 1/4	63.5	38.1	57.2	47.8	65.0	74.7	39.6	58.7	46.0	2.0	7.0	5.0
1 1/2	73.2	44.5	63.5	53.8	74.7	84.1	46.0	65.0	52.3	2.0	7.0	5.0
2	91.9	57.2	82.6	73.2	93.7	103.1	58.7	84.1	71.4	2.0	7.0	5.0
2 1/2	104.6	68.3	95.3	85.9	106.4	115.8	69.9	96.8	84.1	2.0	7.0	5.0
3	127.0	84.1	117.3	108.0	128.5	138.2	85.9	119.1	106.4	2.0	7.0	5.0
3 1/2	139.7	96.8	130.0	120.7	141.2	150.9	98.6	131.8	119.1	2.0	7.0	5.0
4	157.2	109.5	144.5	131.8	158.8	168.1	111.3	146.1	130.0	2.0	7.0	5.0
5	185.7	136.7	173.0	160.3	187.5	196.9	138.2	174.8	158.8	2.0	7.0	5.0
6	215.9	162.1	203.2	190.5	217.4	227.1	163.6	204.7	189.0	2.0	7.0	5.0
8	269.7	212.9	254.0	238.3	271.5	280.9	214.4	255.5	236.5	2.0	7.0	5.0
10	323.9	266.7	304.8	285.8	325.4	335.0	268.2	306.3	284.2	2.0	7.0	5.0
12	381.0	317.5	362.0	342.9	382.5	392.2	319.0	363.5	341.4	2.0	7.0	5.0
14	412.8	349.3	393.7	374.7	414.3	423.9	350.8	395.2	373.1	2.0	7.0	5.0
16	469.9	400.1	447.5	425.5	471.4	481.1	401.6	449.3	423.9	2.0	7.0	5.0
18	533.4	450.9	511.0	489.0	534.9	544.6	452.4	512.8	487.4	2.0	7.0	5.0
20	584.2	501.7	558.8	533.4	585.7	595.4	503.2	560.3	531.9	2.0	7.0	5.0
24	692.2	603.3	666.8	641.4	693.7	703.3	604.8	668.3	639.8	2.0	7.0	5.0

Notes:

(1) Small male and female faces are not applicable to Slip–on Flange.
(2) Large male and female faces are not applicable to Class 150 Flanges.
(3) For flanges of Class 150 and 300 where they are to be bolted to ASME Class 125 and 250 Cast–Iron Flanges or required with flat face, flat face can be made by removing raised face.
(4) Tongue and groove and small male and female. The gasket contact surface finish shall not exceed 3.2㎛.

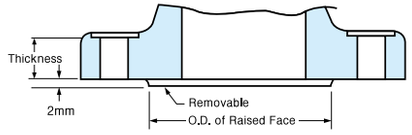

• Tolerances are ±0.03″ (0.8mm) for 0.06″ (2mm) RF and ±0.02″ (0.5mm) for 0.25″ (7mm) RF Large Male and Large Tongue.

THREAD AND STANDARDS FOR ANSI FLANGES (ASME B1.20.1)

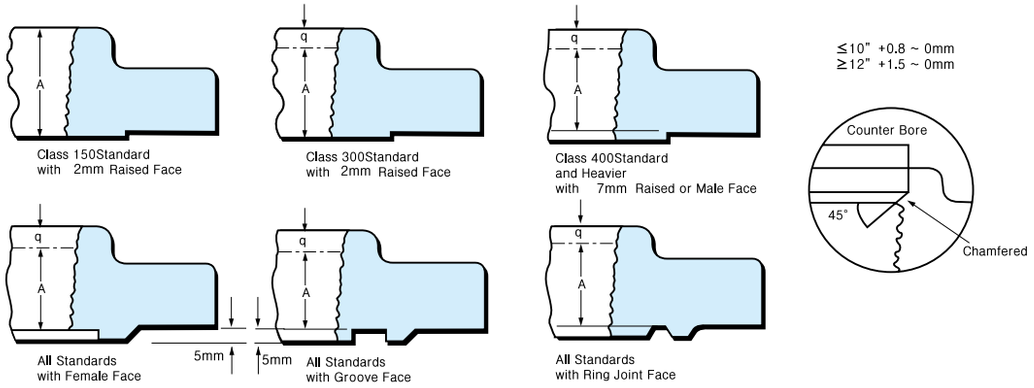

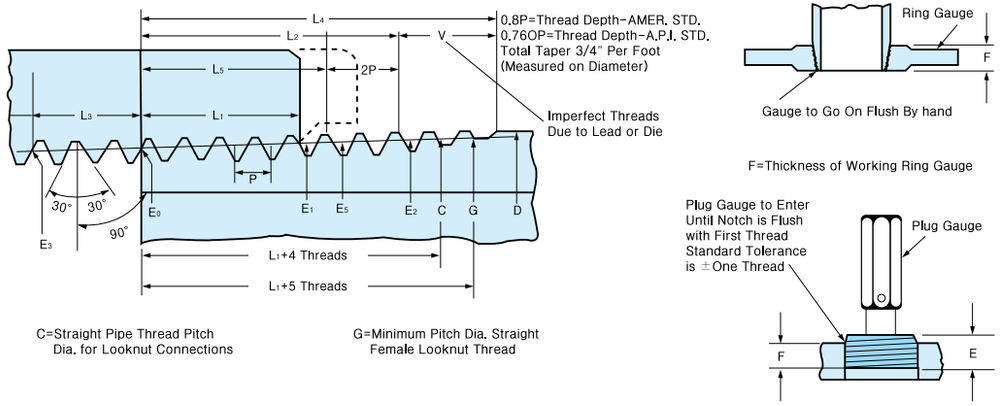

C=Straight Pipe Thread Pitch Dia. for Looknut Connections

G=Minimum Pitch Dia. Straight Female Looknut Thread

ASME B16.5 FORGED FLANGES

Unit : mm

Nominal Pipe Size	A-THREAD LENGTHS						
	Class 150	Class 300	Class 400	Class 600	Class 900	Class 1500	Class 2500
1/2	15.9	15.9	15.9	15.9	22.2	22.2	28.6
3/4	15.9	15.9	15.9	15.9	25.4	25.4	31.8
1	17.5	17.5	17.5	17.5	28.6	28.6	34.9
1 1/4	20.7	20.7	20.7	20.7	30.2	30.1	38.1
1 1/2	22.2	22.2	22.2	22.2	31.8	31.8	44.5
2	25.4	28.6	28.6	28.6	38.1	38.1	50.8
2 1/2	28.6	31.8	31.8	31.8	47.6	47.6	57.2
3	30.1	31.8	34.9	34.9	41.3	50.8	63.5
3 1/2	31.8	36.5	39.7	39.7			
4	33.4	36.5	36.5	41.3	47.6	57.2	69.9
5	36.5	42.9	42.9	47.6	54.0	63.5	76.2
6	39.7	46.1	46.1	50.8	57.2	69.9	82.6
8	44.5	50.8	50.8	60.3	63.5	76.2	95.3
10	49.2	55.6	55.6	65.1	71.5	84.2	108.0
12	55.6	60.3	60.3	69.9	76.2	92.1	120.7
14	57.2	63.5	63.5	73.0	82.6		
16	63.5	68.3	68.3	77.8	85.7		
18	68.3	69.9	69.9	79.2	88.9		
20	69.9	73.0	73.0	82.6	92.1		
24	82.6	82.6	82.6	92.1	101.6		

Notes:

(1) Except flanges with Small Male/Female Face (on pipe end), threaded flanges, have an American National Standard taper pipe thread conforming to ASME B1.20.1

(2) The thread is concentric with the axis of the flange and variations in alignment do not exceed 0.06(1.6mm) in. per foot (0.5 percent)

(3) Class 150 flanges are made without counterbore. The threads are chamfered approximately to the major diameter of the thread at the back of the flange at an angle of approximately 45 degrees with the axis of thread. The chamfer is concentric with the thread and included in the measurement of the thread length.

(4) Class 300 and higher pressure flanges are made with a counterbore at the back of the flange. The threads are chamfered to the diameter of the counterbore at an angle of approximately 45 degrees with the axis of the thread. The counterbore and chamfer are concentric with the thread.

(5) The minimum length of effective thread in reducing flanges is at least equal to dimension Q of the corresponding class of threaded flange as shown in the above tables. Threads do not necessarily extend to the face to the flange.

ASME B16.36 FORGED FLANGES

Unit : mm

Nominal Pipe Size	Outside Diameter of Pipe	Threads Per inch	Pitch of Thread	Pitch Diameter Beginning of Extemal Threads	Handtight Engagement		Effective Thread Extemal		Wrench Make-up Length for Intemal Threaded		Over all Length Extemal Thread
					Length	Diameter	Length	Diameter	Length	Diameter	
	D	N	P	E0	L1	E1	L2	E2	L3	E3	L
1/2	21	14	1.8	19.3	8.1	19.8	13.6	20.1	5.4	18.9	19.9
3/4	27	14	1.8	24.6	8.6	25.1	13.9	25.4	5.4	24.2	20.2
1	33	11 1/2	2.2	30.8	10.2	31.5	17.3	31.9	6.6	30.4	25.0
1 1/4	42	11 1/2	2.2	39.6	10.7	40.2	18.0	40.7	6.6	39.1	25.6
1 1/2	48	11 1/2	2.2	45.6	10.7	46.3	18.4	46.8	6.6	45.2	26.0
2	60	11 1/2	2.2	57.6	11.1	58.3	19.2	58.8	6.6	57.2	26.9
2 1/2	73	8	3.2	69.1	17.3	70.2	28.9	70.9	6.4	68.7	39.9
3	89	8	3.2	84.9	19.5	86.1	30.5	86.8	6.4	84.5	41.5
3 1/2	102	8	3.2	97.5	20.9	98.8	31.8	99.5	6.4	97.1	42.8
4	114	8	3.2	110.1	21.4	111.4	33.0	112.2	6.4	109.7	44.0
4 1/2	127	8	3.2	122.7	22.2	124.1	34.3	123.0			
5	141	8	3.2	136.9	23.8	138.4	35.7	139.2	6.4	136.5	46.7
6	168	8	3.2	163.7	24.3	165.3	38.4	166.1	6.4	163.3	49.4
7	194	8	3.2	189.0	25.4	190.6	41.0	189.3			
8	219	8	3.2	214.2	27.0	215.9	43.5	216.9	6.4	213.8	54.5
9	244	8	3.2	239.5	28.7	241.2	46.0	239.8			
10	273	8	3.2	267.9	30.7	269.8	48.9	270.9	6.4	267.5	59.9
11	298	8	3.2	293.1	32.6	295.1	51.4	293.5			
12	324	8	3.2	318.3	34.5	320.5	54.0	321.7	6.4	317.9	65.0
14	356	8	3.2	349.9	39.7	352.4	57.2	353.5	6.4	349.5	68.2
15	381	8	3.2	375.1	42.8	377.8	59.7	375.6			
16	406	8	3.2	400.4	46.0	403.2	62.2	404.3	6.4	400.0	73.2
17	432	8	3.2	425.6	48.3	428.6	64.8	426.1			
18	457	8	3.2	450.9	50.8	454.0	67.3	455.1	6.4	450.5	78.3
20	508	8	3.2	501.3	54.0	504.7	72.4	505.9	6.4	500.9	83.4
24	610	8	3.2	602.3	60.3	606.1	82.6	607.5	6.4	601.9	93.6

ASME B36.10

Unit : mm

Nominal Pipe Inch (B)	Nominal Pipe mm (DN)	Outside Diam	I.D Wall	Nominal Inside diameter and Wall thickness Sch. 5	Sch. 10	Sch. 20	Sch. 30	STD	Sch. 40	Sch. 60	Sch. XS	Sch. 80	Sch. 100	Sch. 120	Sch. 140	Sch. 160	Sch. XXS
1/8	6	10.3	I.D		7.8		7.4	6.8	6.8		5.5	5.5					
			Wall		1.2		1.5	1.7	1.7		2.4	2.4					
1/4	8	13.7	I.D		10.4		10.0	9.2	9.2		7.7	7.7					
			Wall		1.7		1.9	2.2	2.2		3.0	3.0					
3/8	10	17.1	I.D		13.8		13.4	12.5	12.5		10.7	10.7					
			Wall		1.7		1.9	2.3	2.3		3.2	3.2					
1/2	15	21.3	I.D	18.0	17.1		16.5	15.8	15.8		13.8	13.8				11.7	6.4
			Wall	1.7	2.1		2.4	2.8	2.8		3.7	3.7				4.8	7.5
3/4	20	26.7	I.D	23.4	22.5		21.9	21.0	21.0		18.9	18.9				15.6	11.1
			Wall	1.7	2.1		2.4	2.9	2.9		3.9	3.9				5.6	7.8
1	25	33.4	I.D	30.1	27.9		27.6	26.6	26.6		24.3	24.3				20.7	15.2
			Wall	1.7	2.8		2.9	3.4	3.4		4.6	4.6				6.4	9.1
1 1/4	32	42.2	I.D	38.9	36.7		36.3	35.1	35.1		32.5	32.5				29.5	22.8
			Wall	1.7	2.8		3.0	3.6	3.6		4.9	4.9				6.4	9.7
1 1/2	40	48.3	I.D	45.0	42.8		41.9	40.9	40.9		38.1	38.1				34.0	28.0
			Wall	1.7	2.8		3.2	3.7	3.7		5.1	5.1				7.1	10.2
2	50	60.3	I.D	57.0	54.8		53.9	52.5	52.5		49.2	49.2				42.8	38.2
			Wall	1.7	2.8		3.2	3.9	3.9		5.5	5.5				8.7	11.1
2 1/2	65	73.0	I.D	68.8	66.9		63.4	62.7	62.7		59.0	59.0				53.9	45.0
			Wall	2.1	3.1		4.8	5.2	5.2		7.0	7.0				9.5	14.0
3	80	88.9	I.D	84.7	82.8		79.3	77.9	77.9		73.7	73.7				66.6	58.4
			Wall	2.1	3.1		4.8	5.5	5.5		7.6	7.6				11.1	15.2
3 1/2	90	101.6	I.D	97.4	95.5		92.0	90.1	90.1		85.4	85.4					
			Wall	2.1	3.1		4.8	5.7	5.7		8.1	8.1					
4	100	114.3	I.D	110.1	108.2		104.7	102.3	102.3		97.2	97.2		92.0		87.3	80.1
			Wall	2.1	3.1		4.8	6.0	6.0		8.6	8.6		11.1		13.5	17.1
5	125	141.3	I.D	135.8	134.5			128.2	128.2		122.2	122.2		115.9		109.5	103.2
			Wall	2.8	3.4			6.6	6.6		9.5	9.5		12.7		15.9	19.1
6	150	168.3	I.D	162.8	161.5			154.1	154.1		146.4	146.4		139.8		131.8	124.4
			Wall	2.8	3.4			7.1	7.1		11.0	11.0		14.3		18.3	22.0
8	200	219.1	I.D	213.6	211.6	206.4	205.0	202.7	202.7	198.5	193.7	193.7	188.9	182.6	177.9	173.1	174.6
			Wall	2.8	3.8	6.4	7.0	8.2	8.2	10.3	12.7	12.7	15.1	18.3	20.6	23.0	22.2
10	250	273.1	I.D	266.3	264.7	260.4	257.5	254.6	254.6	247.7	247.7	242.9	236.5	230.1	222.2	215.9	222.3
			Wall	3.4	4.2	6.4	7.8	9.3	9.3	12.7	12.7	15.1	18.3	21.4	25.4	28.6	25.4
12	300	323.9	I.D	316.0	314.8	311.1	307.0	304.7	303.2	295.3	298.4	288.8	281.0	273.0	266.6	257.2	273.1
			Wall	4.0	4.6	6.4	8.4	9.5	10.3	14.3	12.7	17.5	21.4	25.4	28.6	33.3	25.4
14	350	355.6	I.D	347.7	342.9	339.8	336.5	336.5	333.3	325.4	330.2	317.5	307.9	300.0	292.1	284.2	
			Wall	4.0	6.4	7.9	9.5	9.5	11.1	15.1	12.7	19.1	23.8	27.8	31.8	35.7	
16	400	406.4	I.D	398.0	393.7	390.6	387.3	387.3	381.0	373.1	381.0	363.5	354.0	344.5	333.3	325.4	
			Wall	4.2	6.4	7.9	9.5	9.5	12.7	16.7	12.7	21.4	26.2	31.0	36.5	40.5	
18	450	457.0	I.D	448.6	444.3	441.2	434.7	437.9	428.5	418.9	431.6	409.3	398.3	387.1	377.7	366.5	
			Wall	4.2	6.4	7.9	11.1	9.5	14.3	19.1	12.7	23.8	29.4	34.9	39.7	45.2	
20	500	508.0	I.D	498.4	495.3	488.9	482.6	488.9	477.8	466.8	482.6	455.6	442.9	431.8	419.1	408.0	
			Wall	4.8	6.4	9.5	12.7	9.5	15.1	20.6	12.7	26.2	32.5	38.1	44.5	50.0	
22	550	559.0	I.D	549.4	546.3	539.9	533.6	539.9		514.5	533.6	501.8	489.1	476.4	463.7	451.0	
			Wall	4.8	6.4	9.5	12.7	9.5		22.2	12.7	28.6	34.9	41.3	47.6	54.0	
24	600	610.0	I.D	598.9	597.3	590.9	581.5	590.9	575.0	560.8	584.6	548.1	532.2	518.0	505.3	490.9	
			Wall	5.5	6.4	9.5	14.3	9.5	17.5	24.6	12.7	31.0	38.9	46.0	52.4	59.5	

▶ **Not included B36.10**

The wall thickness shown represent nominal wall dimensions which are subject to a–12.5% mill tolerance.
Note that schedule 40 in, size 12″ (304.8mm) and larger and that schedule 80 in, size 10″ (254mm) and larger do not agree with schedules 40S and 80S of ANSI B36. 19 nor with standard weight and extra strong respectively.

ASME B36.19

Unit : mm

Nominal Pipe Size Inch (B)	Nominal Pipe Size mm (DN)	Outside Diam	I.D Wall	Nominal Inside diameter and Wall thickness Sch. 5S	Sch. 10S	Sch. 40S	Sch. 80S
1/8	6	10.3	I.D		7.8	6.8	5.5
			Wall		1.2	1.7	2.4
1/4	8	13.7	I.D		10.4	9.2	7.7
			Wall		1.7	2.2	3.0
3/8	10	17.1	I.D		13.8	12.5	10.7
			Wall		1.7	2.3	3.2
1/2	15	21.3	I.D	18.0	17.1	15.8	13.8
			Wall	1.7	2.1	2.8	3.7
3/4	20	26.7	I.D	23.4	22.5	21.0	18.9
			Wall	1.7	2.1	2.9	3.9
1	25	33.4	I.D	30.1	27.9	26.6	24.3
			Wall	1.7	2.8	3.4	4.6
1 1/4	32	42.2	I.D	38.9	36.7	35.1	32.5
			Wall	1.7	2.8	3.6	4.9
1 1/2	40	48.3	I.D	45.0	42.8	40.9	38.1
			Wall	1.7	2.8	3.7	5.1
2	50	60.3	I.D	57.0	54.8	52.5	49.2
			Wall	1.7	2.8	3.9	5.5
2 1/2	65	73.0	I.D	68.8	66.9	62.7	59.0
			Wall	2.1	3.1	5.2	7.0
3	80	88.9	I.D	84.7	82.8	77.9	73.7
			Wall	2.1	3.1	5.5	7.6
3 1/2	90	101.6	I.D	97.4	95.5	90.1	85.4
			Wall	2.1	3.1	5.7	8.1
4	100	114.3	I.D	110.1	108.2	102.3	97.2
			Wall	2.1	3.1	6.0	8.6
5	125	141.3	I.D	135.8	134.5	128.2	122.2
			Wall	2.8	3.4	6.6	9.5
6	150	168.3	I.D	162.8	161.5	154.1	146.4
			Wall	2.8	3.4	7.1	11.0
8	200	219.1	I.D	213.6	211.6	202.7	193.7
			Wall	2.8	3.8	8.2	12.7
10	250	273.1	I.D	266.3	264.7	254.6	247.7
			Wall	3.4	4.2	9.3	12.7
12	300	323.9	I.D	316.0	314.8	304.8	298.5
			Wall	4.0	4.6	9.5	12.7
14	350	355.6	I.D	347.7	346.0	336.5	330.2
			Wall	4.0	4.8	9.5	12.7
16	400	406.4	I.D	398.0	396.8	387.3	381.0
			Wall	4.2	4.8	9.5	12.7
18	450	457.0	I.D	448.6	447.4	437.9	431.6
			Wall	4.2	4.8	9.5	12.7
20	500	508.0	I.D	498.4	496.9	488.9	482.6
			Wall	4.8	5.5	9.5	12.7
22	550	559.0	I.D	549.4	547.9		
			Wall	4.8	5.5		
24	600	610.0	I.D	598.9	597.3	590.9	584.6
			Wall	5.5	6.4	9.5	12.7
30	750	762.0	I.D	749.3	746.2		
			Wall	6.4	7.9		

The wall thickness shown represent nominal or average wall dimensions which are subject to a–12.5% mill tolerance.
Sizes 14″ (355.6mm) through 30″ (762.0mm) are not at publication date covered in B36.19, and dimensions listed are those commonly used in the industry.
*Schedules 5S and 10S wall thicknesses do not permit threading in accordance with ANSI B1.20.1
*Note that schedule 40S and schedule 80S in these size do not agree with schedule 40 and schedule 80 of ANSI B36.10, and that they are identical to standard weight and extra strong respectively of ANSI B36.10.

MATERIAL GRADE

GRADE	COMPOSITION										UNS NO.	DIN	Tensile Strength	Yield Strength	Brinell
	C	Mn	P	S	Si	Ni	Cr	Mo	N	V			Min, ksi(MPa)	Min, ksi(MPa)	Hardness
LOW ALLOY STEELS															
F1	0.28	0.60–0.90	0.045	0.045	0.15–0.35			0.44–0.65			K12822	15Mo3	70(485)	40(275)	143–192
F5	0.15	0.30–0.60	0.03	0.03	0.5	0.5	4.0–6.0	0.44–0.65			K41545	12CrMo19–5	70(485)	40(275)	143–217
F9	0.15	0.30–0.60	0.03	0.03	0.50–1.00		8.0–10.0	0.90–1.10			K90941	12–CrMo9–1	85(585)	55(380)	179–217
F91	0.08–0.12	0.30–0.60	0.02	0.01	0.20–0.50	0.4	8.0–9.5	0.85–1.05	0.03–0.07	0.18–0.25	K90901	X10CrMoN69–1	90(620)	60(415)	190–248
F92	0.07–0.13	0.30–0.60	0.02	0.01	0.5	0.4	8.50–9.50	0.30–0.60	0.03–0.07	0.15–0.25	K92460		90(620)	64(440)	269max
F11 CL.1	0.05–0.15	0.30–0.60	0.03	0.03	0.50–1.00		1.00–1.50	0.44–0.65			K11597	13CrMo44	60(415)	30(205)	121–174
F12 CL.1	0.05–0.15	0.30–0.60	0.045	0.045	0.5		0.80–1.25	0.44–0.65			K11562	16CrMo44	60(415)	32(220)	121–174
F22 CL.1	0.05–0.15	0.30–0.60	0.04	0.04	0.5		2.00–2.50	0.87–1.13			K21590	10CrMo9–10	60(415)	30(205)	170max
F23	0.04–0.10	0.10–0.60	0.03	0.01	0.5	0.4	1.90–2.60	0.05–0.30	0.03	0.20–0.30	K41650		74(510)	58(400)	220max
SCM440	0.38–0.43	0.60–0.90	0.03	0.03	0.15–0.35	0.25	0.90–1.20	0.15–0.30				42CrMo4			
SNCM439	0.36–0.43	0.60–0.90	0.03	0.03	0.15–0.35	1.60–2.00	0.60–1.00	0.15–0.30				36CrNiMo4			
STAINLESS STEELS (MARTENSITIC)															
F6a CL.1	0.15	1	0.04	0.03	1	0.5	11.5–13.5				S41000	X12Cr13	70(485)	40(275)	143–207
STAINLESS STEELS (FERRITIC)															
F429	0.12	1	0.04	0.03	0.75	0.5	14.0–16.0				S42900		60(415)	35(240)	190max
F430	0.12	1	0.04	0.03	0.75	0.5	16.0–18.0				S43000		60(415)	35(240)	190max
STAINLESS STEELS(AUSTENITIC)															
F304L	0.03	2	0.045	0.03	1	8.0–13.0	18.0–20.0		0.1		S30403	X2CrNi19–11	70(485)	25(170)	
F310	0.25	2	0.045	0.03	1	19.0–22.0	24.0–26.0				S31000	X12CrNi25–20	75(515)	30(205)	
F316L	0.03	2	0.045	0.03	1	10.0–15.0	16.0–18.0	2.0–3.0	0.1		S31603	X2CrNiMo18–14–3	70(485)	25(170)	
F317L	0.03	2	0.045	0.03	1	11.0–15.0	18.0–20.0	3.0–4.0			S31703		70(485)	25(170)	
F321	0.08	2	0.045	0.03	1	9.0–12.0	17.0–19.0				S32100	X6CrNiTi18–10	75(515)	30(205)	
F347	0.08	2	0.045	0.03	1	9.0–13.0	17.0–20.0				S34700	X6CrNiNb18–10	75(515)	30(205)	
F44	0.02	1	0.03	0.01	0.8	17.5–18.5	19.5–20.5	6.0–6.5	0.18–0.25		S31254		94(650)	44(300)	
F904L	0.02	2	0.04	0.03	1	23.0–28.0	19.0–23.0	4.0–5.0	0.1		NO8904		71(490)	31(215)	
STAINLESS STEELS (DUPLEX)															
F51	0.03	2	0.03	0.02	1	4.5–6.5	21.0–23.0	2.5–3.5	0.08–0.20		S31803	X2CrNiMoN22–5–3	90(620)	65(450)	
F53	0.03	1.2	0.035	0.02	0.8	6.0–8.0	24.0–26.0	3.0–5.0	0.24–0.32		S32750	X2CrNiMoCuWN25–7–4	116(800)	80(550)	310max
SUSF329J3L	0.03	2	0.04	0.03	1	4.50–6.50	21.0–24.0	2.50–3.50	0.08–0.20						
F60	0.03	2	0.03	0.02	1	4.5–6.5	22.0–23.0	3.0–3.5	0.14–0.20		S32205		95(655)	65(450)	
CARBON STEELS															
A105	0.35	0.60–1.05	0.035	0.04	0.10–0.35	0.4	0.3	0.12	Cu 0.4	0.08		CK25	70(485)	36(250)	187
A350LF2	0.3	0.60–1.35	0.035	0.04	0.15–0.30	0.4	0.3	0.12	Cu 0.4 Nb 0.02	0.08			70–95	36(250)	197
A350LF3	0.2	0.9	0.035	0.04	0.20–0.35	3.3–3.7	0.3	0.12	Cu 0.4 Nb 0.02	0.03			70–95	37.5(260)	197
A694/F65	0.26	1.6	0.025	0.025	0.15–0.35								77(530)	65(450)	
S45C	0.42–0.48	0.60–0.90	0.03	0.035	0.15–0.35										
ALLOY STEELS															
ALLOY20	0.07	2	0.45	0.35	1	32–38	19–21	2.0–3.0			NO8020				
ALLOY625	0.1	0.5	0.015	0.015	0.5	58	20–23	8.0–10.0			NO6625				
ALLOY800	0.1	1.5		0.015	1	30–35	19–23				NO8800				
A800H/HT	0.05–0.10	1.5		0.015	1	30–35	19–23				NO8810/11				
ALLOY825	0.05	1		0.03	0.5	38–46	19.5–23.5	2.50–3.50			NO8825				
MOLD STEELS															
SKT4	0.50–0.60	0.60–0.90	0.03	0.02	0.10–0.40	1.50–1.80	0.80–1.20	0.35–0.55		0.05–0.15					
STD61	0.32–0.42	0.5	0.03	0.03			4.50–5.50	1.00–1.50		0.80–1.20					

▶ All valves are maximum unless otherwise stated.

WELDING ENDS ASME B16.5 FORGED FLANGES

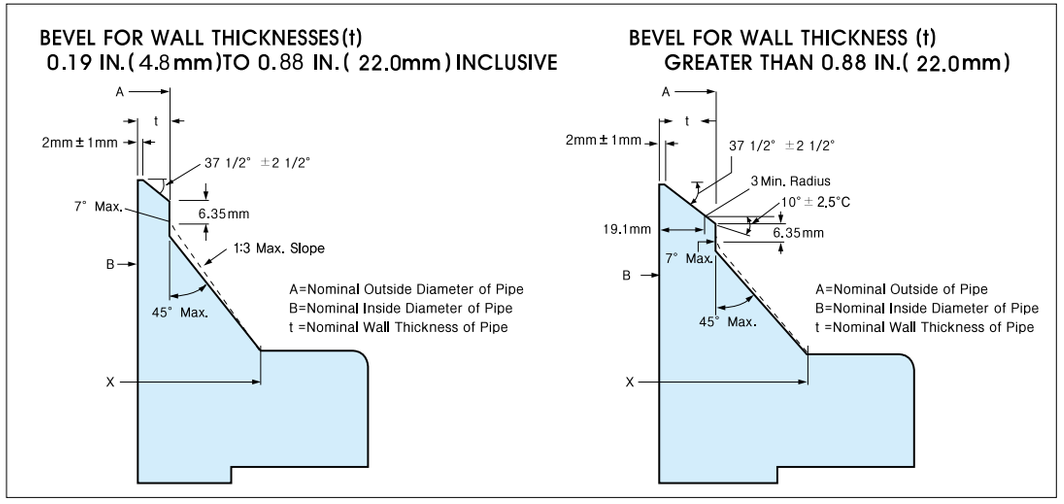

Notes:

When the thickness of the hub at the bevel is greater than that of the pipe to which the flange is joined and the additional
thickness is provided on the outside diameter, a taper weld having a slop not exceeding 1 to 3 may be employed or, alternatively, the greater outside diameter may be tapered, at the same maximum slope or less, from a point on the welding bevel equal to the OD at the mating pipe. Similarly, when the greater thickness is provided on the inside of the flange, it shall be taper–bored from the welding end at a slope not exceeding 1 to 3.

When flanges covered by this standard are intended for services with light wall, higher strength pipe, the thickness of the hub at the bevel may be greater than that of the pipe to which the flange is joined. Under these conditions a single taper hub may be provided and the outside diameter of the hub at the base (Dimension X) may also be modified.

The additional thickness may be provided on either inside or outside or partially on each side, but the total additional thickness shall not exceed one–half times the nominal wall thickness of intened mating pipe.

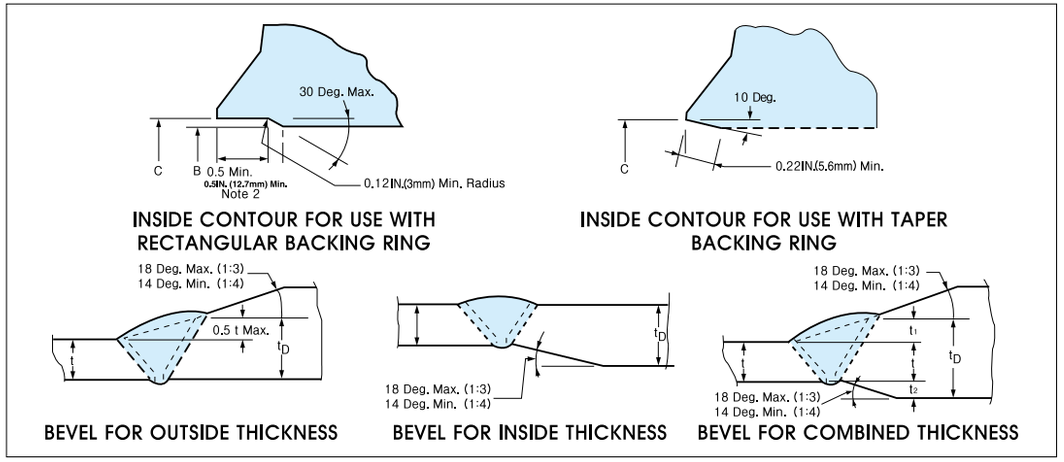

Notes:

(1) When the materials joined have equal minimum specified yield strength, there shall be no restriction on the minimum slope.
(2) Neither t1, t2, nor their sum (t1+t2) shall exceed 0.5t.
(3) When the minimum specified yield strength of the sections to be joined are unequal, the valus of t_D shall at least equal t time the ratio of minimum specified yield strength of the pipe to minimum specified yield strength of the flange.

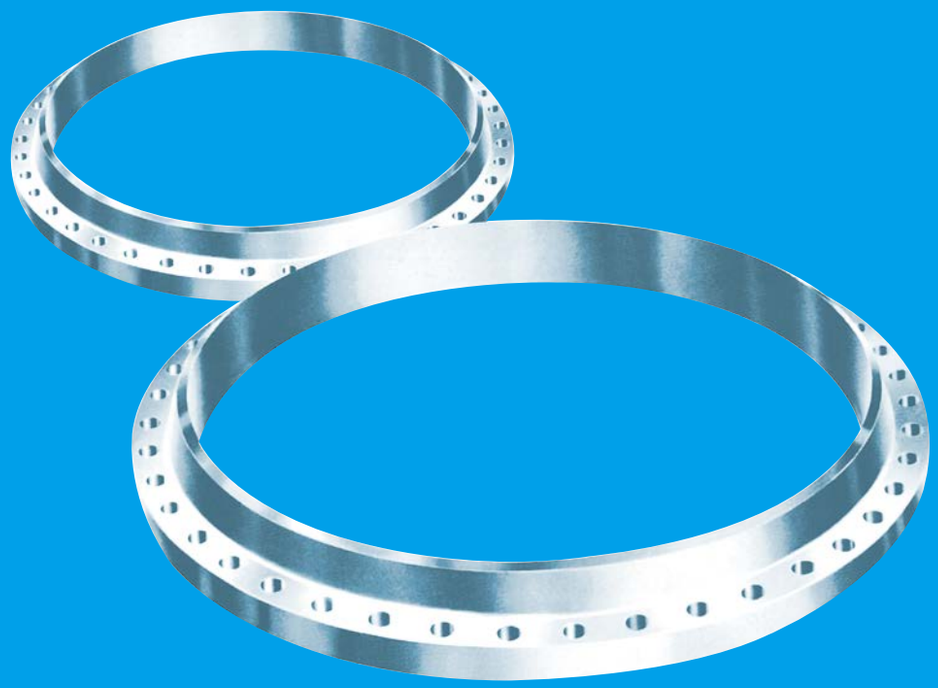

ANSI/ASME B16.47 SERIES B FLANGES (API 605)

Class 75 Flanges

Class 150 Flanges

Class 300 Flanges

Class 400 Flanges

Class 600 Flanges

Class 900 Flanges

CLASS 75 FLANGES

ASME B16. 47 SER, B(API 605)

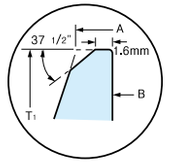

Detail "W"
Typical Welding end Preparation

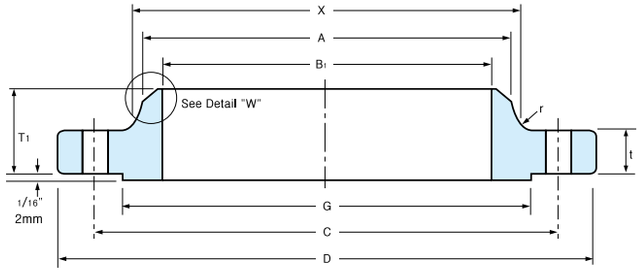

Unit : mm

Nominal Pipe Size	Outside Diam	O.D. of Raised Face	Diam. at Base of Hub	Thick-ness		BORE Wall Thickness			Length Thru Hub	Diam of Hub at Bevel	Minimum Filet Radius	DRILLING Bolt Circle Diam	Number of Holes	Diam of Holes	Approximate Weight Pounds(Kg)
				WNF	BL	6.35mm	9.5mm	12.7mm							
	D	G	X	t		B1			T1	A	r	C			
26	762	704.9	676.1	31.8	31.8	647.7	641.4	635.0	57.2	661.9	7.9	723.9	36	19.1	63.9 (29.01)
28	813	755.7	726.9	31.8	31.8	698.5	692.2	685.8	60.5	712.7	7.9	774.7	40	19.1	68.3 (31.01)
30	864	806.5	777.7	31.8	31.8	749.3	743.0	736.6	63.5	763.5	7.9	825.5	44	19.1	777.2 (35.05)
32	914	857.3	828.5	33.5	35.1	800.1	793.8	787.4	68.3	814.3	7.9	876.3	48	19.1	105.8 (48.03)
34	965	908.1	879.3	33.5	36.6	850.9	844.6	838.2	71.6	865.1	7.9	927.1	52	19.1	110.2 (50.03)
36	1034	965.2	935.0	35.1	40.9	901.7	895.4	889.0	84.3	915.9	9.7	992.1	40	22.2	136.7 (62.06)
38	1084	1016.0	985.8	36.6	42.9	952.5	946.2	939.8	87.4	966.7	9.7	1042.9	40	22.2	154.3 (70.05)
40	1135	1066.8	1036.6	36.6	42.9	1003.3	997.0	990.6	90.7	1017.5	9.7	1093.7	44	22.2	163.1 (74.05)
42	1186	1117.6	1087.4	38.1	46.2	1054.1	1047.8	1041.4	93.7	1068.3	9.7	1144.5	48	22.2	169.8 (77.09)
44	1251	1174.8	1140.0	41.4	47.8	1104.9	1049.4	1143.0	103.4	1119.1	9.7	1203.5	36	25.4	180.8 (82.08)
46	1302	1225.6	1190.8	42.9	49.2	1155.7	1149.4	1143.0	106.4	1169.9	9.7	1254.3	40	25.4	231.5 (105.01)
48	1353	1276.4	1241.6	44.5	52.6	1206.5	1200.2	1193.8	109.7	1220.7	9.7	1305.1	44	25.4	264.6 (120.03)
50	1403	1327.2	1293.9	46.2	54.1	1257.3	1251.0	1244.6	114.3	1271.5	9.7	1355.9	44	25.4	295.8 (134.28)
52	1457	1378.0	1344.7	46.2	55.6	1308.1	1301.8	1295.4	119.1	1322.3	9.7	1409.7	48	25.4	313.2 (142.18)
54	1508	1428.8	1397.0	47.8	58.9	1358.9	1352.6	1346.2	124.0	1373.1	9.7	1460.5	48	25.4	396.8 (180.15)
56	1575	1485.9	1450.8	49.3	60.5	1409.7	1403.4	1397.0	133.4	1423.9	11.2	1521.0	40	28.6	406.6 (184.58)
58	1626	1536.7	1501.6	50.8	62.0	1460.5	1454.2	1447.8	136.7	1474.7	11.2	1571.8	44	28.6	430.8 (195.56)
60	1676	1587.5	1552.4	54.1	65.3	1511.3	1505.0	1498.6	143.0	1525.5	11.2	1622.6	44	28.6	463.0 (210.20)

CLASS 150 FLANGES

Unit : mm

Nominal Pipe Size	Outside Diam	O.D. of Raised Face	Diam. at Base of Hub	Thick-ness		BORE Wall Thickness			Length Thru Hub	Diam of Hub at Bevel	Minimum Filet Radius	DRILLING Bolt Circle Diam	Number of Holes	Diam of Holes	Approximate Weight Pounds(Kg)
				WNF	BL	6.35mm	9.5mm	12.7mm							
	D	G	X	t		B1			T1	A	r	C			
26	786	711.2	684.3	39.9	42.9	647.7	641.4	635.0	87.4	661.9	9.7	744.5	36	22.2	114.6 (52.03)
28	837	762.0	735.1	42.9	46.2	698.5	692.2	685.8	93.7	712.7	9.7	795.3	40	22.2	127.9 (58.07)
30	887	812.8	787.4	42.9	49.3	749.3	743.0	736.6	98.6	763.5	9.7	846.1	44	22.2	143.4 (65.06)
32	941	863.6	839.7	44.5	52.6	800.1	793.8	787.4	106.4	814.3	9.7	900.2	48	22.2	187.4 (85.08)
34	1005	920.8	892.0	47.8	55.6	850.9	844.6	838.2	108.7	865.1	9.7	957.3	40	25.4	220.5 (100.11)
36	1057	971.6	944.6	50.8	57.2	901.7	895.4	889.0	116.1	915.9	9.7	1009.7	44	25.4	253.5 (115.09)
38	1124	1022.4	997.0	52.6	62.0	952.5	946.2	939.8	122.4	968.2	9.7	1069.8	40	28.6	297.5 (135.07)
40	1175	1079.5	1049.3	54.1	65.3	1003.3	997.0	990.6	127.0	1019.0	9.7	1120.6	44	28.6	330.7 (150.14)
42	1226	1130.3	1101.9	57.2	66.7	1054.1	1047.8	1041.4	131.8	1069.8	11.2	1171.4	48	28.6	363.8 (165.17)
44	1276	1181.1	1152.7	58.9	69.8	1104.9	1098.4	1092.2	135.1	1120.6	11.2	1222.2	52	28.6	440.9 (200.17)
46	1341	1234.9	1205.0	60.5	73.2	1155.7	1149.4	1143.0	143.0	1171.4	11.2	1284.2	40	31.8	463.0 (210.20)
48	1392	1289.1	1257.3	63.5	76.2	1206.5	1200.2	1193.8	147.8	1222.2	11.2	1335.0	44	31.8	529.1 (240.21)
50	1443	1339.9	1308.1	66.8	79.5	1257.3	1251.0	1244.6	152.4	1273.0	11.2	1385.8	48	31.8	552.4 (250.27)
52	1494	1390.7	1360.4	68.3	82.6	1308.1	1301.8	1295.4	155.7	1323.8	11.2	1436.6	52	31.8	585.9 (265.77)
54	1549	1441.5	1412.7	69.9	85.9	1358.9	1352.6	1346.2	160.5	1374.6	11.2	1492.3	56	31.8	683.4 (310.26)
56	1600	1492.3	1465.3	71.6	88.9	1409.7	1403.4	1397.0	165.1	1425.4	14.2	1543.1	60	31.8	674.8 (306.08)
58	1675	1543.1	1516.1	73.2	91.3	1460.5	1454.2	1447.8	173.2	1476.2	14.2	1611.4	48	34.9	810.6 (367.76)
60	1726	1600.2	1570.0	74.7	95.2	1511.3	1505.0	1498.6	177.8	1527.0	14.2	1662.2	52	34.9	903.9 (410.37)

Notes:

(1) For the inside diameter of pipes (corresponding to 'Bore' (B_1) of Welding Neck Flanges), refer to page 56~57.

CLASS 300 FLANGES

Unit : mm

Nominal Pipe Size	Outside Diam	O.D. of Raised Face	Diam. at Base of Hub	Thick-ness		BORE Wall Thickness			Length Thru Hub	Diam of Hub at Bevel	Minimum Filet Radius	DRILLING Bolt Circle Diam	Number of Holes	Diam of Holes	Approximate Weight Pounds(Kg)
				WNF	Blind	6.35mm	9.5mm	12.7mm							
	D	G	X	t		B1			T1	A	r	C			
26	867	736.6	701.5	87.4	87.4	647.7	641.4	635.0	143.0	665.2	14.2	803.1	32	34.9	440.9 (200.17)
28	921	787.4	755.7	87.4	87.4	698.5	692.2	685.8	147.5	716.0	14.2	857.3	36	35.1	463.0 (210.20)
30	991	844.6	812.8	92.2	92.2	749.3	743.0	736.6	156.5	768.4	14.2	920.8	36	38.1	595.2 (270.22)
32	1054	901.7	863.6	101.6	101.6	800.1	793.8	787.4	166.6	819.2	15.7	977.9	32	41.3	727.5 (330.29)
34	1108	952.5	917.4	101.6	101.6	850.9	844.6	838.2	171.5	870.0	15.7	1031.7	36	41.3	793.7 (360.34)
36	1171	1009.7	965.2	101.6	101.6	901.7	895.4	889.0	179.3	920.8	15.7	1089.2	32	44.5	903.9 (410.37)
38	1222	1060.5	1016.0	109.5	109.5	952.5	946.2	939.8	190.5	971.6	15.7	1140.0	36	44.5	1256.6 (570.50)
40	1273	1114.6	1066.8	114.3	114.3	1003.3	997.0	990.6	196.6	1022.4	15.7	1190.8	40	44.5	1455.0 (660.57)
42	1334	1168.4	1117.6	117.6	117.6	1054.1	1047.8	1041.4	203.2	1074.7	15.7	1244.5	36	47.6	1587.3 (720.63)
44	1384	1219.2	1173.2	125.5	125.5	1104.9	1098.6	1092.2	212.9	1125.5	15.7	1295.4	40	47.6	1763.7 (800.72)
46	1461	1270.0	1228.9	127.0	128.5	1155.7	1149.4	1143.0	220.7	1176.3	15.7	1365.3	36	50.8	2138.5 (970.88)
48	1511	1327.2	1277.9	127.0	133.4	1206.5	1200.2	1193.8	222.3	1227.1	15.7	1416.1	40	50.8	2182.5 (990.86)
50	1562	1378.0	1330.5	136.7	138.2	1257.3	1251.0	1244.6	233.4	1277.9	15.7	1466.9	44	50.8	2308.2 (1047.92)
52	1613	1428.8	1382.8	141.2	142.5	1308.1	1301.8	1295.4	241.3	1328.7	15.7	1517.7	48	50.8	2453.3 (1113.79)
54	1673	1479.6	1435.1	135.1	147.6	1358.9	1352.6	1346.2	238.3	1379.5	15.7	1577.8	48	50.8	2557.3 (1161.01)
56	1765	1536.7	1493.8	152.4	155.5	1409.7	1403.4	1397.0	266.7	1430.3	17.5	1651.0	36	60.3	2942.9 (1336.08)
58	1827	1593.9	1547.9	152.4	160.3	1460.5	1454.2	1447.8	273.1	1481.1	17.5	1712.0	40	60.3	3144.5 (1427.60)
60	1878	1651.0	1598.7	149.4	165.1	1511.3	1505.0	1498.6	270.0	1531.9	17.5	1763.8	40	60.3	3196.7 (1451.30)

CLASS 400 FLANGES

Unit : mm

Nominal Pipe Size	Outside Diam	O.D. of Raised Face	Diam. at Base of Hub	Thick-ness		BORE Wall Thickness			Length Thru Hub	Diam of Hub at Bevel	Minimum Filet Radius	DRILLING Bolt Circle Diam	Number of Holes	Diam of Holes	Approximate Weight Pounds(Kg)
				WNF	Blind	6.35mm	9.5mm	12.7mm							
	D	G	X	t		B1			T1	A	r	C			
26	850.9	711.2	688.8	88.9	88.9	647.7	641.4	635.0	149.4	660.4	11.2	781.1	28	38.1	– –
28	914.4	762.0	739.6	95.3	95.3	698.5	692.2	685.8	158.8	711.2	12.7	838.2	24	41.3	– –
30	971.6	819.2	793.8	101.6	101.6	749.3	743.0	736.6	169.9	762.0	12.7	895.4	28	41.3	– –
32	1035.1	873.3	844.6	108.0	108.0	800.1	793.8	787.4	179.3	812.8	12.7	952.5	28	44.5	– –
34	1085.9	927.1	898.7	111.3	111.3	850.9	844.6	838.2	187.5	863.6	14.2	1003.3	32	44.5	– –
36	1155.7	980.9	952.5	119.1	119.1	901.7	895.4	889.0	200.2	914.4	14.2	1066.8	28	47.6	– –

CLASS 600 FLANGES

Unit : mm

Nominal Pipe Size	Outside Diam	O.D. of Raised Face	Diam. at Base of Hub	Thick-ness		BORE Wall Thickness			Length Thru Hub	Diam of Hub at Bevel	Minimum Filet Radius	DRILLING Bolt Circle Diam	Number of Holes	Diam of Holes	Approximate Weight Pounds(Kg)
				WNF	Blind	6.35mm	9.5mm	12.7mm							
	D	G	X	t		B1			T1	A	r	C			
26	889.0	726.9	698.5	111.3	111.3	647.7	641.4	635.0	180.8	660.4	12.7	806.5	28	44.5	– –
28	952.5	784.4	752.3	115.8	115.8	698.5	692.2	685.8	190.5	711.2	12.7	863.6	28	47.6	– –
30	1022.4	841.2	806.5	125.5	127.0	749.3	743.0	736.6	204.7	762.0	12.7	927.1	28	50.8	– –
32	1085.9	895.4	860.6	130.0	134.9	800.1	793.8	787.4	215.9	812.8	12.7	984.3	28	54.0	– –
34	1162.1	952.5	914.4	141.2	144.3	850.9	844.6	838.2	233.4	863.6	14.2	1054.1	24	60.3	– –
36	1212.9	1009.7	968.2	146.1	150.9	901.7	895.4	889.0	242.8	914.4	14.2	1104.9	28	60.3	– –

CLASS 900 FLANGES

Unit : mm

Nominal Pipe Size	Outside Diam	O.D. of Raised Face	Diam. at Base of Hub	Thick-ness		BORE Wall Thickness			Length Thru Hub	Diam of Hub at Bevel	Minimum Filet Radius	DRILLING Bolt Circle Diam	Number of Holes	Diam of Holes	Approximate Weight Pounds(Kg)
				WNF	Blind	6.35mm	9.5mm	12.7mm							
	D	G	X	t		B1			T1	A	r	C			
26	1022.4	762.0	743.0	134.9	153.9	647.7	641.4	635.0	258.8	660.4	11.2	901.7	20	66.7	– –
28	1104.9	819.2	797.1	147.6	166.6	698.5	692.2	685.8	276.4	711.2	12.7	971.6	20	73.0	– –
30	1181.1	876.3	850.9	155.4	176.0	749.3	743.0	736.6	289.1	762.0	12.7	1035.1	20	79.4	– –
32	1238.3	927.1	908.1	160.3	185.7	800.1	793.8	787.4	303.3	812.8	12.7	1092.2	20	79.4	– –
34	1314.5	990.6	962.2	171.5	195.1	850.9	844.6	838.2	319.0	863.6	14.2	1155.7	20	85.7	– –
36	1346.2	1028.7	1016.0	173.0	201.7	901.7	895.4	889.0	325.4	914.4	14.2	1200.2	24	79.4	– –

Notes:

(1) For the inside diameter of pipes (corresponding to 'Bore' (B1) of Welding Neck Flanges), refer to page 56~57.

ANSI/ASME B16.47 SERIES A FLANGES (MSS SP44)

Class 150 Flanges

Class 300 Flanges

Class 400 Flanges

Class 600 Flanges

Class 900 Flanges

CLASS 150 FLANGES

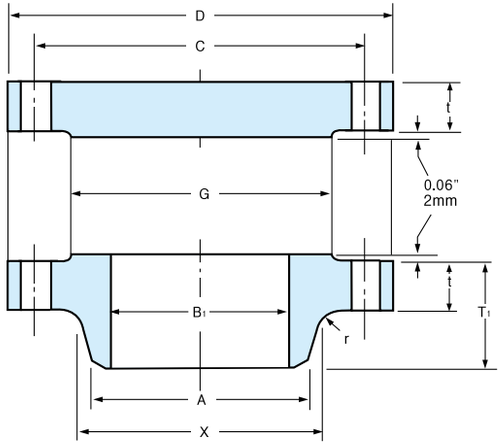

WELDING-ENDS FOR WELDING-NECK FLANGES

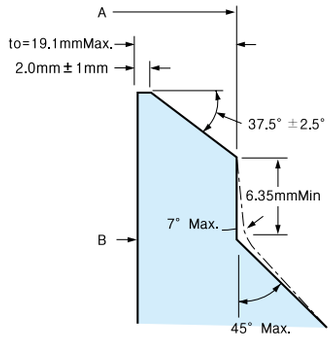

BEVEL FOR WALL THICKNESS (t)
0.19 IN.(4.8mm)TO 0.88 IN.(22.0mm)INCLUSIVE

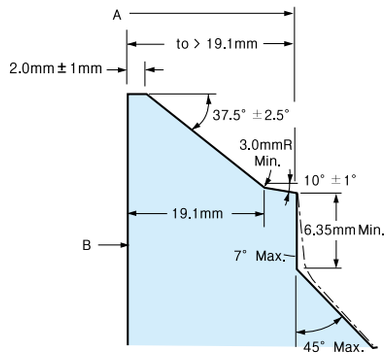

BEVEL FOR WALL THICKNESSES (t)
GREATER THAN 0.88 IN.(22.0mm)

ANSI/ ASME B16.47 SERIES A FLANGES

Unit : mm

Nominal Pipe Size	Outside Diam.	O.D. of Raised Face	Diam. at Base of Hub	Thickness	BORE	
					Wall Thickness	
					9.5mm	12.7mm
	D	G	X	t	B1	
26	870	749.3	676.1	66.8	641.4	635.0
28	927	800.1	726.9	69.9	692.2	685.8
30	984	857.3	781.1	73.2	743.0	736.6
32	1060	914.4	831.9	79.5	793.8	787.4
34	1111	965.2	882.7	81.0	844.6	838.2
36	1168	1022.4	933.5	88.9	895.4	889.0
38	1238	1073.2	990.6	85.9	946.2	939.8
40	1289	1124.0	1041.4	88.9	997.0	990.6
42	1346	1193.8	1092.2	95.3	1047.8	1041.4
44	1403	1244.6	1143.0	100.1	1098.6	1092.2
46	1454	1295.4	1196.8	101.6	1149.4	1143.0
48	1511	1358.9	1247.6	106.4	1200.2	1193.8
50	1568	1409.7	1301.8	109.7	1251.0	1244.6
52	1626	1460.5	1352.6	114.3	1301.8	1295.4
54	1683	1511.3	1403.4	119.1	1352.6	1346.2
56	1746	1574.8	1457.5	122.4	1403.4	1397.0
58	1803	1625.6	1508.3	127.0	1454.2	1447.8
60	1854	1676.4	1559.1	130.3	1505.0	1498.6

Unit : mm

Nominal Pipe Size	Length thru Hub	Diam. of Hub Bevel	Minimum Radius of Fillet	DRILLING		
				Bolt Circle Diam.	Number of Holes	Diam. of Holes
	T1	A	r	C		
26	119.1	660.4	9.7	806.5	24	34.9
28	124.0	711.2	11.2	863.6	28	34.9
30	135.1	762.0	11.2	914.4	28	34.9
32	143.0	812.8	11.2	977.9	28	41.3
34	147.8	863.6	12.7	1028.7	32	41.3
36	155.7	914.4	12.7	1085.9	32	41.3
38	155.7	965.2	12.7	1149.4	32	41.3
40	162.1	1016.0	12.7	1200.2	36	41.3
42	169.9	1066.8	12.7	1257.3	36	41.3
44	176.3	1117.6	12.7	1314.5	40	41.3
46	184.2	1168.4	12.7	1365.3	40	41.3
48	190.5	1219.2	12.7	1422.4	44	41.3
50	201.7	1270.0	12.7	1479.6	44	47.6
52	208.0	1320.8	12.7	1536.7	44	47.6
54	214.4	1371.6	12.7	1593.9	44	47.6
56	227.1	1422.4	12.7	1651.0	48	47.6
58	233.4	1473.2	12.7	1708.2	48	47.6
60	238.3	1524.0	12.7	1759.0	52	47.6

Notes:

(1) For the 'Bore' (B_1) other than wall thickness 0.375″ (9.5mm) and 0.500″ (12.7mm), refer to page 56~57.

(2) Maximum Pressure Rating for raised face flanges is 285 psi (19.5 BARS) at atmospheric temperature.

CLASS 300 FLANGES

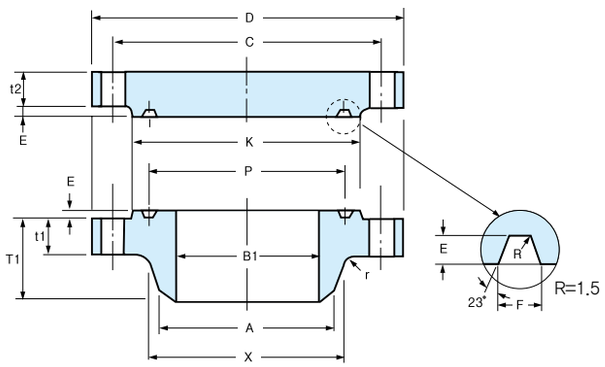

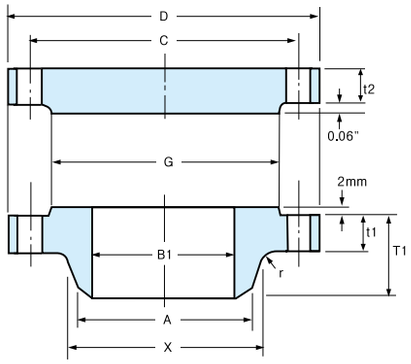

WELDING-ENDS FOR WELDING-NECK FLANGES

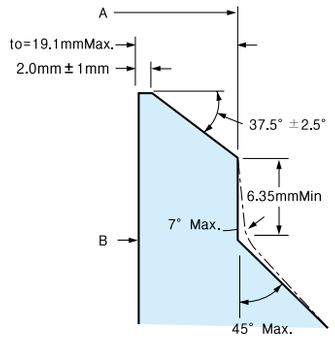

Notes:
* Or I inch at manufacturer's option.
** Flanges sizes 24" (609.6mm) and smaller may be furnished with 37-1/2° bevel at manufacturer's option.

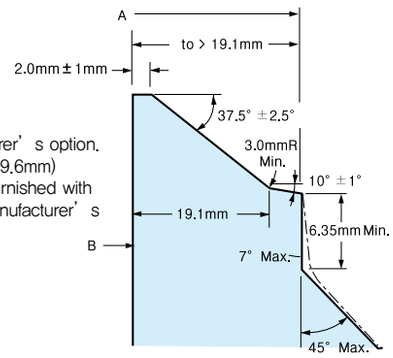

BEVEL FOR WALL THICKNESS (t)
0.19 IN.(4.8mm)TO 0.88 IN.(22.0mm)INCLUSIVE

BEVEL FOR WALL THICKNESSES (t)
GREATER THAN 0.88 IN.(22.0mm)

ANSI/ ASME B16.47 SERIES A FLANGES

Unit : mm

Nominal Pipe Size	Outside Diam.	O.D. of Raised Face	Diam. at Base of Hub	Thickness		BORE Wall Thickness		Length Thru Hub	Diam. of Hub at Bevel	Minimum Radius of Fillet
				Welding Neck	Blind	9.5mm	12.7mm			
	D	G	X	t1	t2	B1		T1	A	r
26	972	749.3	720.9	80.0	83.0	641.4	635.0	182.6	660.4	9.7
28	1035	800.1	774.7	84.3	88.9	692.2	685.8	195.3	711.2	11.2
30	1092	857.3	827.0	90.7	93.7	743.0	736.6	208.0	762.0	11.2
32	1149	914.4	881.1	97.0	98.6	793.8	787.4	220.7	812.8	11.2
34	1207	965.2	936.8	100.1	103.4	844.6	838.2	230.4	863.6	12.7
36	1270	1022.4	990.6	103.4	109.7	895.4	889.0	239.8	914.4	12.7
38	1168	1028.7	993.6	106.4	106.4	946.2	939.8	179.3	965.2	12.7
40	1238	1085.9	1047.8	112.8	112.8	997.0	990.6	192.0	1016.0	12.7
42	1289	1136.7	1098.6	117.6	117.6	1047.8	1041.4	198.6	1066.8	12.7
44	1353	1193.8	1149.4	122.4	122.4	1098.6	1092.2	204.7	1117.6	12.7
46	1416	1244.6	1203.5	127.0	127.0	1149.4	1143.0	214.4	1168.4	12.7
48	1467	1301.8	1254.3	131.8	131.8	1200.2	1193.8	222.3	1219.2	12.7
50	1530	1358.9	1305.1	138.2	138.2	1251.0	1244.6	230.4	1270.0	12.7
52	1581	1409.7	1355.9	143.0	143.0	1301.8	1295.4	236.7	1320.8	12.7
54	1657	1466.9	1409.7	150.9	150.9	1352.6	1346.2	251.0	1371.6	12.7
56	1708	1517.7	1463.5	152.4	152.4	1403.4	1397.0	258.8	1422.4	12.7
58	1759	1574.8	1514.3	157.2	157.2	1454.2	1447.8	265.2	1473.2	12.7
60	1810	1625.6	1565.1	162.1	162.1	1505.0	1498.6	271.5	1524.0	12.7

Unit : mm

Nominal Pipe Size	DRILLING			Pitch Diam.	GROOVE DIMENSIONS			Diam. of Raised Face	Ring and Groove Number
	Bolt Circle Diam.	Number of Holes	Diam. of Holes		Width	Depth	Radius		
	C			P	F	E	R	K	
26	876.3	28	44.5	749.3	19.8	12.7	1.5	809.8	R93
28	939.8	28	44.5	800.1	19.8	12.7	1.5	860.6	R94
30	997.0	28	47.6	857.3	19.8	12.7	1.5	917.4	R95
32	1054.1	28	50.8	914.4	23.0	14.3	1.5	984.3	R96
34	1104.9	28	50.8	965.2	23.0	14.3	1.5	1035.1	R97
36	1168.4	32	54.0	1022.4	23.0	14.3	1.5	1092.2	R98
38	1092.2	32	41.1						
40	1155.7	32	44.5						
42	1206.5	32	44.5						
44	1263.7	32	47.8						
46	1320.8	28	50.8						
48	1371.6	32	50.8						
50	1428.8	32	54.0						
52	1479.6	32	54.0						
54	1549.4	28	60.3						
56	1600.2	28	60.3						
58	1651.0	32	60.3						
60	1701.8	32	60.3						

Notes:
(1) For the 'Bore' (B_1) other than wall thickness 0.375″ (9.5mm) and 0.500″ (12.7mm), refer to page 56~57.

(2) Maximum Pressure Rating for raised face flanges is 740 psi (51 BARS) at atmospheric temperature.

CLASS 400 FLANGES

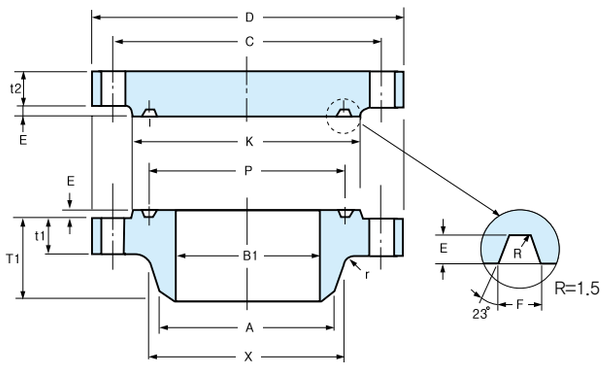

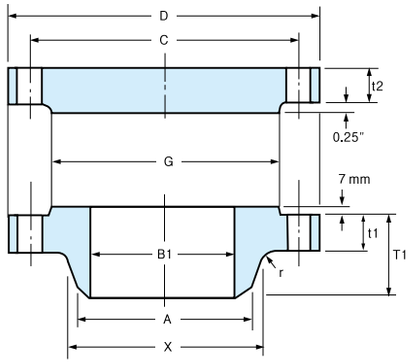

WELDING-ENDS FOR WELDING-NECK FLANGES

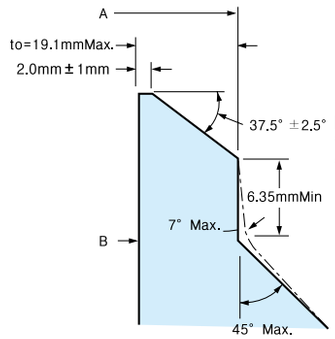

Notes:
* Or I inch at manufacturer's option.
** Flanges sizes 24" (609.6mm) and smaller may be furnished with 37-1/2° bevel at manufacturer's option.

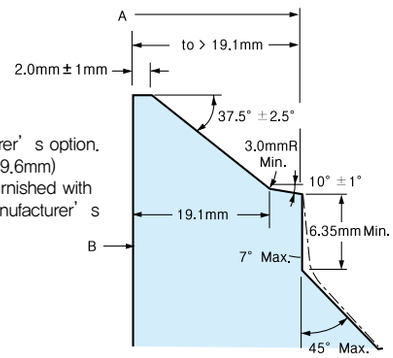

BEVEL FOR WALL THICKNESS (t)
0.19 IN.(4.8mm)TO 0.88 IN.(22.0mm)INCLUSIVE

BEVEL FOR WALL THICKNESSES (t)
GREATER THAN 0.88 IN.(22.0mm)

ANSI/ ASME B16.47 SERIES A FLANGES

Unit : mm

Nominal Pipe Size	Outside Diam.	O.D. of Raised Face	Diam. at Base of Hub	Thickness		BORE Wall Thickness		Length Thru Hub	Diam. of Hub at Bevel	Minimum Radius of Fillet
				Welding Neck	Blind	9.5mm	12.7mm			
	D	G	X	t1	t2	B1		T1	A	r
26	972	749.3	726.9	88.9	98.6	641.4	635.0	193.5	660.4	11.2
28	1035	800.1	782.6	95.3	104.6	692.2	685.8	206.2	711.2	12.7
30	1092	857.3	836.7	101.6	111.3	743.0	736.6	218.9	762.0	12.7
32	1149	914.4	889.0	108.0	115.8	793.8	787.4	231.6	812.8	12.7
34	1207	965.2	944.6	111.3	122.2	844.6	838.2	241.3	863.6	14.2
36	1270	1022.4	1000.3	114.3	128.5	895.4	889.0	251.0	914.4	14.2
38	1207	1035.1	1003.3	124.0	124.0	946.2	939.8	206.2	965.2	14.2
40	1270	1092.2	1054.1	130.0	130.0	997.0	990.6	215.9	1016.0	14.2
42	1321	1143.0	1107.9	133.4	133.4	1047.8	1041.4	223.8	1066.8	14.2
44	1384	1200.2	1158.7	139.7	139.7	1098.6	1092.2	233.2	1117.6	14.2
46	1441	1257.3	1212.9	146.1	146.1	1149.4	1143.0	244.3	1168.4	14.2
48	1511	1308.1	1267.0	152.4	152.4	1200.2	1193.8	257.0	1219.2	14.2
50	1568	1361.9	1320.8	157.2	158.8	1251.0	1244.6	268.2	1270.0	14.2
52	1619	1412.7	1371.6	162.1	163.6	1301.8	1295.4	276.4	1320.8	14.2
54	1702	1470.2	1425.4	169.9	171.5	1352.6	1346.2	289.1	1371.6	14.2
56	1753	1527.0	1479.6	174.8	176.3	1403.4	1397.0	298.5	1422.4	14.2
58	1803	1577.8	1530.4	177.8	180.8	1454.2	1447.8	306.3	1473.2	14.2
60	1886	1635.3	1584.5	185.7	189.0	1505.0	1498.6	319.0	1524.0	14.2

Unit : mm

Nominal Pipe Size	DRILLING			Pitch Diam.	GROOVE DIMENSIONS			Diam. of Raised Face	Ring and Groove Number
	Bolt Circle Diam.	Number of Holes	Diam. of Holes		Width	Depth	Radius		
	C			P	F	E	R	K	
26	876.3	28	47.6	749.3	19.8	12.7	1.5	809.8	R93
28	939.8	28	50.8	800.1	19.8	12.7	1.5	860.6	R94
30	997.0	28	54.0	857.3	19.8	12.7	1.5	917.4	R95
32	1054.1	28	54.0	914.4	23.0	14.3	1.5	984.3	R96
34	1104.9	28	54.0	965.2	23.0	14.3	1.5	1035.1	R97
36	1168.4	32	54.0	1022.4	23.0	14.3	1.5	1092.2	R98
38	1117.6	32	47.6						
40	1174.8	32	50.8						
42	1225.6	32	50.8						
44	1282.7	32	54.0						
46	1339.9	36	54.0						
48	1403.4	28	60.3						
50	1460.5	32	60.3						
52	1511.3	32	60.3						
54	1581.2	28	66.7						
56	1632.0	32	66.7						
58	1682.8	32	66.7						
60	1752.6	32	73.0						

Notes:
(1) For the 'Bore' (B_1) other than wall thickness 0.375″ (9.5mm) and 0.500″ (12.7mm), refer to page 56~57.

(2) Maximum Pressure Rating for raised face flanges is 985 psi (68 BARS) at atmospheric temperature.

CLASS 600 FLANGES

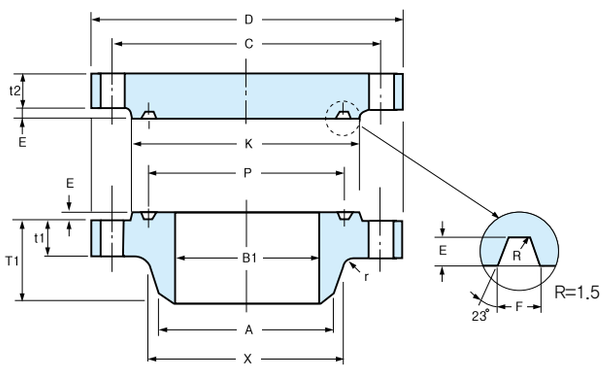

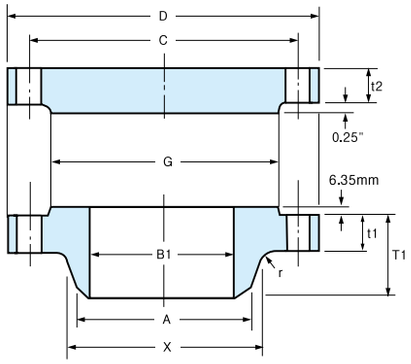

WELDING-ENDS FOR WELDING-NECK FLANGES

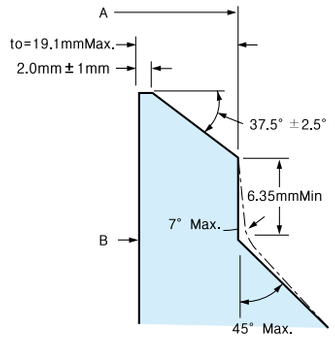

Notes:
* Or I inch at manufacturer's option.
** Flanges sizes 24" (609.6mm) and smaller may be furnished with 37-1/2° bevel at manufacturer's option.

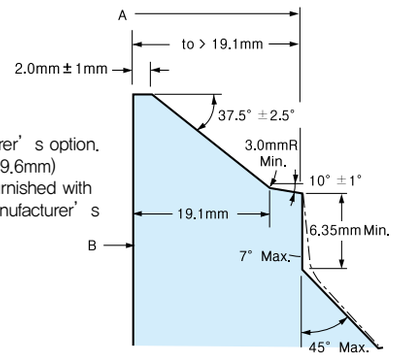

BEVEL FOR WALL THICKNESS (t)
0.19 IN.(4.8mm)TO 0.88 IN.(22.0mm)INCLUSIVE

BEVEL FOR WALL THICKNESSES (t)
GREATER THAN 0.88 IN.(22.0mm)

ANSI/ ASME B16.47 SERIES A FLANGES

Unit : mm

Nominal Pipe Size	Outside Diam.	O.D. of Raised Face	Diam. at Base of Hub	Thickness		BORE Wall Thickness		Length Thru Hub	Diam. of Hub at Bevel	Minimum Radius of Fillet
				Welding Neck	Blind	9.5mm	12.7mm			
	D	G	X	t1	t2	B1		T1	A	r
26	1016	749.3	747.8	108.0	125.5	641.4	635.0	222.3	660.4	12.7
28	1073	800.1	803.1	111.3	131.8	692.2	685.8	235.0	711.2	12.7
30	1130	857.3	862.1	114.3	139.7	743.0	736.6	247.7	762.0	12.7
32	1194	914.4	917.4	117.3	147.6	793.8	787.4	260.4	812.8	12.7
34	1245	965.2	973.1	120.7	153.9	844.6	838.2	269.7	863.6	14.2
36	1314	1022.4	1031.7	124.0	162.1	895.4	889.0	282.4	914.4	14.2
38	1270	1054.1	1022.4	152.4	155.4	946.2	939.8	254.0	965.2	14.2
40	1321	1111.3	1073.2	158.8	162.1	997.0	990.6	263.7	1016.0	14.2
42	1403	1168.4	1127.3	168.1	171.5	1047.8	1041.4	279.4	1066.8	14.2
44	1454	1225.6	1181.1	173.0	177.8	1098.6	1092.2	289.1	1117.6	14.2
46	1511	1276.4	1234.9	179.3	185.7	1149.4	1143.0	300.0	1168.4	14.2
48	1594	1333.5	1289.1	189.0	195.3	1200.2	1193.8	316.0	1219.2	14.2
50	1670	1384.3	1343.2	196.9	203.2	1251.0	1244.6	328.7	1270.0	14.2
52	1721	1435.1	1394.0	203.2	209.6	1301.8	1295.4	336.6	1320.8	14.2
54	1778	1492.3	1447.8	209.6	217.4	1352.6	1346.2	349.3	1371.6	14.2
56	1854	1543.1	1501.6	217.4	225.6	1403.4	1397.0	362.0	1422.4	15.7
58	1905	1600.2	1552.4	222.3	231.6	1454.2	1447.8	369.8	1473.2	15.7
60	1994	1657.4	1609.9	233.4	242.8	1505.0	1498.6	388.9	1524.0	17.5

Unit : mm

Nominal Pipe Size	DRILLING			Pitch Diam.	GROOVE DIMENSIONS			Diam. of Raised Face	Ring and Groove Number
	Bolt Circle Diam.	Number of Holes	Diam. of Holes		Width	Depth	Radius		
	C			P	F	E	R	K	
26	914.4	28	50.8	749.3	19.8	12.7	1.5	809.8	R93
28	965.2	28	54.0	800.1	19.8	12.7	1.5	860.6	R94
30	1022.4	28	54.0	857.3	19.8	12.7	1.5	917.4	R95
32	1079.5	28	60.3	914.4	23.0	14.3	1.5	984.3	R96
34	1130.3	28	60.3	965.2	23.0	14.3	1.5	1035.1	R97
36	1193.8	28	66.7	1022.4	23.0	14.3	1.5	1092.2	R98
38	1162.1	28	60.3						
40	1212.9	32	60.3						
42	1282.7	28	66.7						
44	1333.5	32	66.7						
46	1390.7	32	66.7						
48	1460.5	32	73.0						
50	1524.0	28	79.4						
52	1574.8	32	79.4						
54	1632.0	32	79.4						
56	1695.5	32	85.7						
58	1746.3	32	85.7						
60	1822.5	28	92.1						

Notes:
(1) For the 'Bore' (B_1) other than wall thickness 0.375" (9.5mm) and 0.500" (12.7mm), refer to page 56~57.

(2) Maximum Pressure Rating for raised face flanges is 1480 psi (102.1 BARS) at atmospheric temperature.

CLASS 900 FLANGES

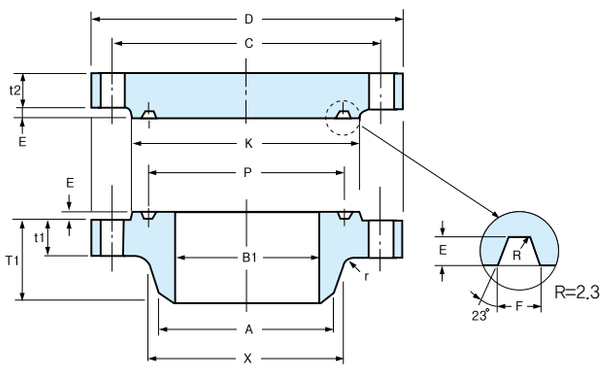

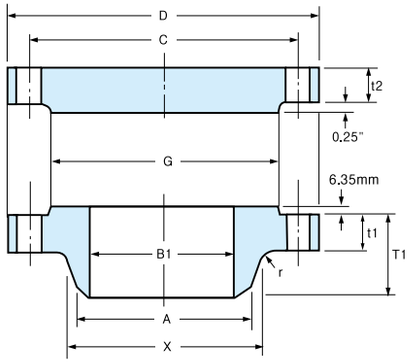

ANSI/ ASME B16.47 SERIES A FLANGES

Unit : mm

Nominal Pipe Size	Outside Diam.	O.D. of Raised Face	Diam. at Base of Hub	Thickness		BORE Wall Thickness		Length Thru Hub	Diam. of Hub at Bevel	Minimum Radius of Fillet
				Welding Neck	Blind	9.5mm	12.7mm			
	D	G	X	t1	t2	B1		T1	A	r
26	1086	749.3	774.7	139.7	160.3	641.4	635.0	285.8	660.4	11.2
28	1168	800.1	831.9	142.7	171.5	692.2	685.8	298.5	711.2	12.7
30	1232	857.3	889.0	149.4	182.4	743.0	736.6	311.2	762.0	12.7
32	1314	914.4	946.2	158.8	193.5	793.8	787.4	330.2	812.8	12.7
34	1397	965.2	1006.3	165.1	204.7	844.6	838.2	349.3	863.6	14.2
36	1461	1022.4	1063.8	171.5	214.4	895.4	889.0	362.0	914.4	14.2
38	1461	1098.6	1073.2	190.5	215.9	946.2	939.8	352.6	965.2	19.1
40	1511	1162.1	1127.3	196.9	223.8	997.0	990.6	363.5	1016.0	20.6
42	1562	1212.9	1176.3	206.2	231.6	1047.8	1041.4	371.3	1066.8	20.6
44	1648	1270.0	1234.9	214.4	242.8	1098.6	1092.2	390.7	1117.6	22.4
46	1734	1333.5	1292.4	225.6	275.5	1149.4	1143.0	411.0	1168.4	22.4
48	1784	1384.3	1343.2	233.4	263.7	1200.2	1193.8	419.1	1219.2	23.9

Notes:
(1) For the 'Bore' (B_1) other than Wall Thickness 0.375" (9.5mm) and 0.500" (12.7mm), refer to page 56~57.
(2) Maximum Pressure Rating for raised face flanges is 2220 psi (153.1 BARS) at atmospheric temperature.

WELDING-ENDS FOR WELDING-NECK FLANGES

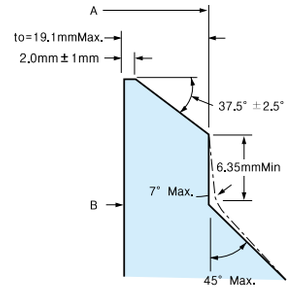

BEVEL FOR WALL THICKNESS (t)
0.19 IN.(4.8mm)TO 0.88 IN.(22.0mm)INCLUSIVE

2.0mm

Notes:
* Or l inch at manufacturer's option.
** Flanges sizes 24" (609.6mm) and smaller may be furnished with 37-1/2° bevel at manufacturer's option.

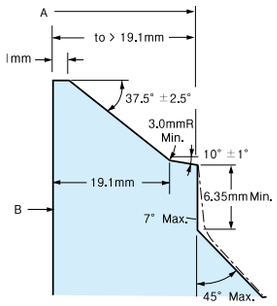

BEVEL FOR WALL THICKNESSES (t)
GREATER THAN 0.88 IN.(22.0mm)

Unit : mm

Nominal Pipe Size	DRILLING			Pitch Diam.	GROOVE DIMENSIONS			Diam. of Raised Face	Ring and Groove Number
	Bolt Circle Diam.	Number of Holes	Diam. of Holes		Width	Depth	Radius		
	C			P	F	E	R	K	
26	952.5	20	73.0	749.3	30.2	17.5	2.3	831.9	R100
28	1022.4	20	79.4	800.1	33.3	17.5	2.3	889.0	R101
30	1085.9	20	79.4	857.3	33.3	17.5	2.3	946.2	R102
32	1155.7	20	85.7	914.4	33.3	17.5	2.3	1003.3	R103
34	1225.6	20	92.1	965.2	36.5	20.6	2.3	1066.8	R104
36	1289.1	20	92.1	1022.4	36.5	20.6	2.3	1124.0	R105
38	1289.1	20	92.1						
40	1339.9	24	92.1						
42	1390.7	24	92.1						
44	1463.5	24	98.4						
46	1536.7	24	104.8						
48	1587.5	24	104.8						

* ASME B 16.47 Tolerance

Facing	Outside diameter of raised face (G)			±2mm	(±0.08")
	Height		2.0mm	±0.5mm	(±0.02")
			7.0mm	±2mm	(±0.08")
Thickness (t)	t <= 25mm			+3mm 0mm	(+0.12") (0")
	25mm < t <= 50mm			+5.0mm 0mm	(+0.19") (0")
	50mm < t <= 75mm			+8.0m 0mm	(+0.31") (0")
	t > 75mm			+10.0mm 0mm	(+0.38") (0")
Welding ends and Hubs	Outside Diameter (A)			+5.0mm −2.0mm	(+0.19") (−0.06")
	Inside Diameter (B)	No Backing Ring	wall thk. <= 22.0mm	+3mm −2.0mm	(+0.12") (−0.06")
		Backing Ring	wall thk. <= 22.0mm	0mm −2mm	(0") (−0.06")
Hub Length				+3mm −5.0mm	(+0.12") (−0.19")
Drilling and Facing	Bolt Circle Diameter			±1.5mm	(±0.06")
	Bolt Hole to Bolt Hole			±0.8mm	(±0.03")
	Bolt Circle Concentricity			1.5mm	(0.06")

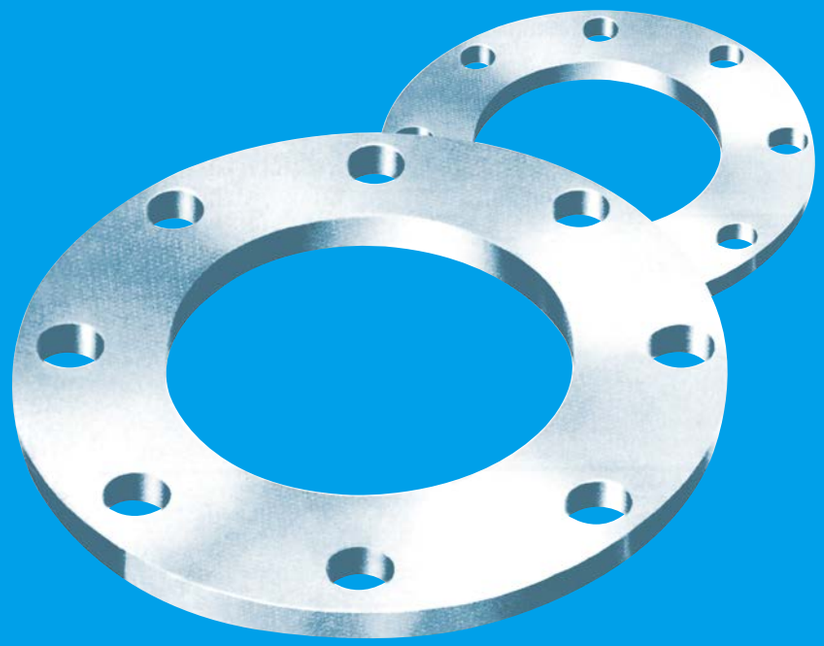

AWWA FLANGES

General Specifications

Class B&D Flanges Table 2

Class B&D Flanges Table 3

Class E Flanges Table 4

GENERAL SPECIFICATIONS
AWWA C207 FLANGES

1. Standard Finishes for Contact Face of AWWA Flange

Flanges of all classes shall be flat faced–that is, without projection or raised face. The dimensions given for thickness are minimum. The flanges shall be faced smooth or may have a serrated finish of approximately 32 serrations per inch, approximately 1/64 in. deep. Serrations may be either spiral or concentric.

2. Dimensional Tolerances for AWWA Flanges

Dimension		Tolerance in.
Bore		+1.6mm –0mm
Outside Diameter		±3.2mm
Thickness	18 in. and smaller	+3.2mm –0mm
	20 in. and larger	+4.8mm –0mm
Length through Hub		18in. and smaller +3.2mm – 0.79mm 20in. and smaller +4.8mm – 1.6mm
Bolt Circle Diameter		±1.6mm
Bolt – hole spacing		±0.79mm

Note: For other dimensional tolerances, see ANSI B16.5, page 51.

3. Bolting

Bolts and nuts shall be carbon steel ASTM A307, Grades A or B, Bolts shall have regular unfinished square or hexagonal heads, and nuts shall have regular square or hexagonal dimensions all in accordance with ANSI B18.21 for wrench head bolts and nuts and wrench openings.
All bolts and nuts shall be threaded in accordance with ANSI B1.1 for screw threads, coarse–thread series, Class 2A and 2B fit.

4. Gaskets

These standards are predicated on the user of either a cloth–inserted rubber gasket 1/16 in. thick or an absestos ring gasket that is either 1/16 in. or 1/8 in. thick, at the purchaser' s option:The gasket shall extend from the inside diameter of the flange to at least the inside edge of the bolt holes, or it may.

CLASS B & D FLANGES TABLE 2

AWWA Standard Steel Ring Flanges, Class B(86psi) and Class D (175–150 psi)

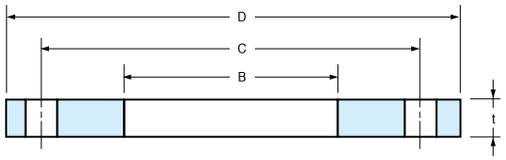

SLIP–ON

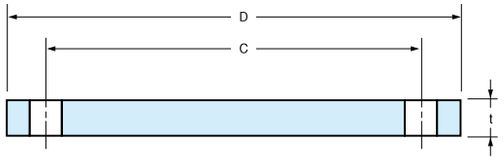

BLIND

AWWA C207

Unit : mm

Nominal Pipe Size	Outside Diam.	Bore	Thickness				DRILLING		
			Class B(t)		Class D(t)		Bolt Circle Diam.	Number of Holes	Diam. of Bolt Holes
	D	B	Slip–on	Blind	Slip–on	Blind	C		
4	228.6	116.1	15.9	15.9	15.9	15.9	190.5	8	19.1
5	254.0	143.8	15.9	15.9	15.9	16.5	215.9	8	22.2
6	279.4	170.7	17.5	17.5	17.5	17.6	241.3	8	22.2
8	342.9	221.5	17.5	17.5	17.5	20.6	298.5	8	22.2
10	406.4	276.4	17.5	17.5	17.5	24.2	362.0	12	25.4
12	482.6	327.2	17.5	18.3	20.6	28.4	431.8	12	25.4
14	533.4	360.4	17.5	20.1	23.8	28.8	476.3	12	28.6
16	596.9	411.2	17.5	22.7	25.4	32.1	539.8	16	28.6
18	635.0	462.0	17.5	24.1	27.0	33.8	577.9	16	31.8
20	698.5	512.8	17.5	26.4	28.6	36.8	635.0	20	31.8
22	749.3	563.6	19.1	28.8	30.2	39.8	692.2	20	34.9
24	812.8	614.4	19.1	30.9	31.8	42.2	749.3	20	34.9
26	870.0	665.2	20.6	33.2	33.3	45.4	806.5	24	34.9
28	927.1	716.0	22.2	35.5	33.3	48.4	863.6	28	34.9
30	984.3	766.8	22.2	37.5	34.9	51.0	914.4	28	34.9
32	1,060.5	817.6	23.8	40.2	38.1	54.6	977.9	28	41.3
34	1,111.3	868.4	23.8	42.2	38.1	57.2	1,028.7	32	41.3
36	1,168.4	919.2	25.4	44.5	41.3	60.2	1,085.9	32	41.3
38	1,238.3	970.0	25.4	47.1	41.3	63.7	1,149.4	32	41.3
40	1,289.1	1,020.8	25.4	49.1	41.3	66.3	1,200.2	36	41.3
42	1,346.2	1,071.6	28.6	51.4	44.5	69.3	1,257.3	36	41.3
44	1,403.4	1,122.4	28.6	53.7	44.5	72.4	1,314.5	40	41.3
46	1,454.2	1,173.2	28.6	55.7	44.5	75.0	1,365.3	40	41.3
48	1,511.3	1,224.0	31.8	58.0	47.6	78.0	1,422.4	44	41.3
50	1,568.5	1,274.8	31.8	60.4	50.8	81.2	1,479.6	44	47.6
52	1,625.6	1,325.6	31.8	62.7	50.8	84.2	1,536.7	44	47.6
54	1,682.8	1,376.4	34.9	65.0	54.0	87.2	1,593.9	44	47.6
60	1,854.2	1,528.8	38.1	71.6	57.2	96.0	1,759.0	52	47.6
66	2,032.0	1,681.2	41.3	78.5	63.5	105.1	1,930.4	52	47.6
72	2,197.1	1,833.6	44.5	85.2	66.7	113.8	2,095.5	60	47.6
78	2,362.2	1,986.0	50.8		69.9		2,260.6	64	54.0
84	2,533.7	2,138.4	50.8		73.0		2,425.7	64	54.0
90	2,705.1	2,290.8	57.2		76.2		2,590.8	68	61.9
96	2,876.6	2,443.2	57.2		82.6		2,755.9	68	61.9
102	3,048.0	2,595.6	63.5		82.6		2,908.3	72	68.3
108	3,219.5	2,748.0	63.5		85.7		3,067.1	72	68.3
114	3,390.9	2,900.4	69.9		88.9		3,219.5	76	74.6
120	3,562.4	3,052.8	69.9		88.9		3,371.9	76	74.6

Notes:

(1) The resultant surface finish shall have 250~500μ inch roughness

(2) The 'Bore' (B) shall be 3/16 in. larger than the nominal outside diameter of the pipe, unless otherwise specified.

CLASS B & D FLANGES TABLE 3

AWWA Standard Steel Hub Flanges, Class D (175–150 psi)

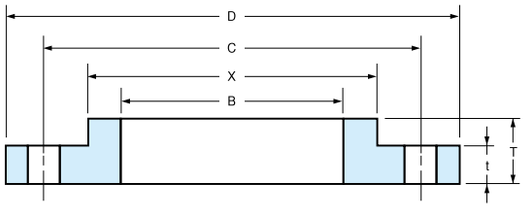

SLIP–ON

AWWA C207

Unit : mm

Nominal Pipe Size	Outside Diam.	Bore	Thickness	Length Through Hub	Diam. of Hub at Base	DRILLING		
						Bolt Circle Diam.	Number of Holes	Diam. of Bolt Holes
	D	B	t	T	X	C		
4	228.6	116.1	12.7	22.2	134.9	190.5	8	19.1
5	254.0	143.8	14.3	31.8	160.3	215.9	8	22.2
6	279.4	170.7	14.3	31.8	192.1	241.3	8	22.2
8	342.9	221.5	14.3	31.8	246.1	298.5	8	22.2
10	406.4	276.4	17.5	31.8	304.8	362.0	12	25.4
12	482.6	327.2	17.5	31.8	365.1	431.8	12	25.4
14	533.4	360.4	19.1	31.8	400.1	476.3	12	28.6
16	596.9	411.2	19.1	31.8	457.2	539.8	16	28.6
18	635.0	462.0	19.1	31.8	504.8	577.9	16	31.8
20	698.5	512.8	19.1	31.8	558.8	635.0	20	31.8
22	749.3	563.6	25.4	44.5	616.0	692.2	20	34.9
24	812.8	614.4	25.4	44.5	663.6	749.3	20	34.9
26	870.0	665.2	25.4	44.5	723.9	806.5	24	34.9
28	927.1	716.0	25.4	44.5	774.7	863.6	28	34.9
30	984.3	766.8	25.4	44.5	825.5	914.4	28	34.9
32	1,060.5	817.6	28.6	44.5	882.7	977.9	28	41.3
34	1,111.3	868.4	28.6	44.5	933.5	1,028.7	32	41.3
36	1,168.4	919.2	28.6	44.5	984.3	1,085.9	32	41.3
38	1,238.3	970.0	28.6	44.5	1,035.1	1,149.4	32	41.3
40	1,289.1	1,020.8	28.6	44.5	1,092.2	1,200.2	36	41.3
42	1,346.2	1,071.6	31.8	44.5	1,143.0	1,257.3	36	41.3
44	1,403.4	1,122.4	31.8	57.2	1,193.8	1,314.5	40	41.3
46	1,454.2	1,173.2	31.8	57.2	1,244.6	1,365.3	40	41.3
48	1,511.3	1,224.0	34.9	63.5	1,295.4	1,422.4	44	41.3
50	1,568.5	1,274.8	34.9	63.5	1,346.2	1,479.6	44	47.6
52	1,625.6	1,325.6	34.9	63.5	1,397.0	1,536.7	44	47.6
54	1,682.8	1,376.4	34.9	63.5	1,447.8	1,593.9	44	47.6
60	1,854.2	1,528.8	38.1	69.9	1,600.2	1,759.0	52	47.6
66	2,032.0	1,681.2	38.1	69.9	1,752.6	1,930.4	52	47.6
72	2,197.1	1,833.6	38.1	69.9	1,905.0	2,095.5	60	47.6
78	2,362.2	1,986.0	44.5	76.2	2,063.8	2,260.6	64	54.0
84	2,533.7	2,138.4	44.5	76.2	2,222.5	2,425.7	64	54.0
90	2,705.1	2,290.8	50.8	82.6	2,381.3	2,590.8	68	61.9
96	2,876.6	2,443.2	50.8	82.6	2,540.0	2,755.9	68	61.9
102	3,048.0	2,595.6	57.2	88.9	2,686.1	2,908.3	72	68.3
108	3,219.5	2,748.0	57.2	88.9	2,832.1	3,067.1	72	68.3
114	3,390.9	2,900.4	63.5	95.3	2,990.9	3,219.5	76	74.6
120	3,562.4	3,052.8	63.5	95.3	3,149.6	3,371.9	76	74.6

Notes:

(1) The resultant surface finish shall have 250~500μ inch roughness.

(2) For Slip–on Flanges,(Hub Type Flanges), the hubs can be shaped either vertical from base to top or tapered within the limits of 7 degrees.

(3) The 'Bore (B)shall be 3/16 in. larger than the nominal outside diameter of the pipe, unless otherwise specified.

CLASS E FLANGES TABLE 4

AWWA Standard Steel Hub Flanges, Class E (275 psi)

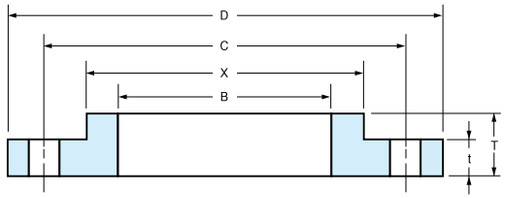

SLIP–ON

AWWA C207

Unit : mm

Nominal Pipe Size	Outside Diam.	Bore	Thickness T			Length Through Hub	Diam. of Hub at Base	DRILLING		
								Bolt Circle Diam.	Number of Holes	Diam. of Bolt Holes
	D	B	Slip–on (Hub type)	Slip–on (ring type)	Blind	T	X	C		
4	228.6	116.1	23.8	28.6	28.6	33.3	134.9	190.5	8	19.1
5	254.0	143.8	23.8	30.2	30.2	36.5	163.5	215.9	8	22.2
6	279.4	170.7	25.4	33.4	33.4	39.7	192.1	241.3	8	22.2
8	342.9	221.5	28.6	38.1	38.1	44.5	246.1	298.5	8	22.2
10	406.4	276.4	30.2	39.7	39.7	49.2	304.8	362.0	12	25.4
12	482.6	327.2	31.8	44.5	44.5	55.6	365.1	431.8	12	25.4
14	533.4	360.4	34.9	47.6	47.6	57.2	400.1	476.3	12	28.6
16	596.9	411.2	36.5	50.8	50.8	63.5	457.2	539.8	16	28.6
18	635.0	462.0	39.7	54.0	54.0	68.3	504.8	577.9	16	31.8
20	698.5	512.8	42.9	60.3	60.3	73.0	558.8	635.0	20	31.8
22	749.3	563.6	46.0	63.5	63.5	79.4	609.6	692.2	20	34.9
24	812.8	614.4	47.6	66.7	66.7	82.6	663.6	749.3	20	34.9
26	870.0	665.2	50.8	69.9	69.9	85.7	723.9	806.5	24	34.9
28	927.1	716.0	52.4	69.9	69.9	87.3	781.1	863.6	28	34.9
30	984.3	766.8	54.0	73.0	73.0	88.9	831.9	914.4	28	34.9
32	1,060.5	817.6	57.2	76.2	76.2	92.1	889.0	977.9	28	41.3
34	1,111.3	868.4	58.7	76.2	77.5	93.7	939.8	1,028.7	32	41.3
36	1,168.4	919.2	60.3	79.4	81.5	95.3	997.0	1,085.9	32	41.3
38	1,238.3	970.0	60.3	79.4	86.2	95.3	1,060.5	1,149.4	32	41.3
40	1,289.1	1,020.8	63.5	82.6	89.7	98.4	1,111.3	1,200.2	36	41.3
42	1,346.2	1,071.6	66.7	85.7	93.9	101.6	1,168.4	1,257.3	36	41.3
44	1,403.4	1,122.4	66.7	85.7	98.0	101.6	1,219.2	1,314.5	40	41.3
46	1,454.2	1,173.2	68.3	87.3	101.5	103.2	1,270.0	1,365.3	40	41.3
48	1,511.3	1,224.0	69.9	88.9	105.6	104.8	1,327.2	1,422.4	44	41.3
50	1,568.5	1,274.8	69.9	88.9	109.9	104.8	1,378.0	1,479.6	44	47.6
52	1,625.6	1,325.6	73.0	92.1	114.0	108.0	1,435.1	1,536.7	44	47.6
54	1,682.8	1,376.4	76.2	95.3	118.1	111.1	1,492.3	1,593.9	44	47.6
60	1,854.2	1,528.8	79.4	98.4	129.9	114.3	1,657.4	1,759.0	52	47.6
66	2,032.0	1,681.2	85.7	108.0	142.3	123.8	1,816.1	1,930.4	52	47.6
72	2,197.1	1,833.6	88.9	111.1	154.1	127.0	1,993.9	2,095.5	60	47.6
78	2,362.2	1,986.0	98.4	120.7	–	136.5	2,146.3	2,260.6	64	54.0
84	2,533.7	2,138.4	98.4	120.7	–	136.5	2,298.7	2,425.7	64	54.0
90	2,705.1	2,290.8	108.0	130.2	–	146.1	2,457.5	2,590.8	68	61.9
96	2,876.6	2,443.2	108.0	130.2	–	146.1	2,609.9	2,755.9	68	61.9
102	3,048.0	2,595.6	117.5	139.7	–	155.6	2,762.3	2,908.3	72	68.3
108	3,219.5	2,748.0	117.5	139.7	–	155.6	2,908.3	3,067.1	72	68.3
114	3,390.9	2,900.4	127.0	149.2	–	165.1	3,079.8	3,219.5	76	74.6
120	3,562.4	3,052.8	127.0	149.2	–	165.1	3,251.2	3,371.9	76	74.6

Notes:

(1) The resultant surface finish shall have 250~500μ inch roughness.

(2) For Slip–on Flanges, (Hub Type Flanges), the hubs can be shaped either vertical from base to top or tapered within the limits of 7 degrees.

(3) The 'Bore' (B) shall be 3/16 in. larger than the nominal outside diameter of the pipe, unless otherwise specified.

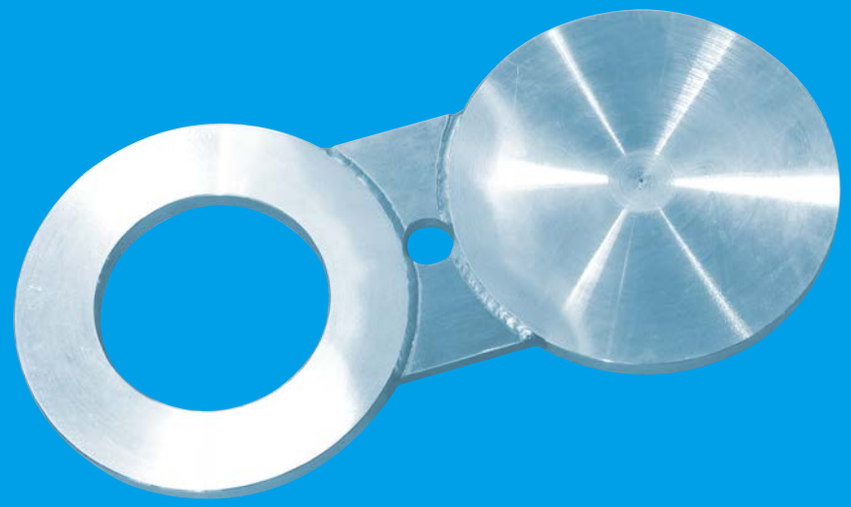

ANSI/ASME B16.48 STEEL LINE BLANKS (API STANDARD 590)

Class 150, 300 Figure 8 Blanks

Class 600, 900 Figure 8 Blanks

Class 1500, 2500 Figure 8 Blanks

Class 150 Spacer and Blanks

Class 300 Spacer and Blanks

CLASS 150, 300 FIGURE 8 BLANKS

Thickness Tolerances.

18" and smaller
−0 + 3mm

20" and larger.
−0 + 4.8mm

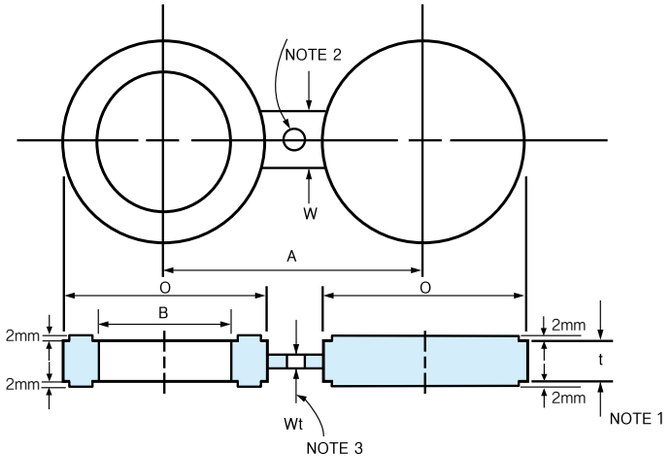

Unit : mm

SiZE	CLASS 150					CLASS 300				
	B	O	A	t	W	B	O	A	t	W
1/2	16	44	60	3	38	16	51	67	6	38
3/4	21	54	70	3	38	21	64	83	6	38
1	27	64	79	3	38	27	70	89	6	38
1 1/4	42	73	89	6.4	38	42	79	99	6	38
1 1/2	48	83	99	6.4	38	48	92	114	6	38
2	60	102	121	6.4	51	60	108	127	10	51
2 1/2	73	121	140	6.4	51	73	127	149	10	51
3	89	133	152	6.4	64	89	146	168	10	64
3 1/2	102	159	178	10	64	102	162	184	13	64
4	114	171	191	10	64	114	178	200	13	64
5	141	194	216	10	76	141	213	235	16	76
6	168	219	241	13	76	168	248	270	16	76
8	219	276	298	13	76	219	305	330	22	76
10	273	337	362	16	102	273	359	387	25	102
12	324	406	432	19	102	324	419	451	28	102
14	356	448	476	19	108	356	483	514	32	108
16	406	511	540	22	108	406	536	572	38	108
18	457	546	578	25	114	457	594	629	41	114
20	508	603	635	28	121	508	651	686	44	121
24	610	714	749	32	140	610	772	813	51	140

Notes:

(1) Thickness(dimension *t*) includes a corrosion allowance of 0.05 inch (1.3millimeters) for material groups 1.1, 1.7, 1.9, 1.10, and 1.12 Corrosion allowance is 0.00 inch for material groups 2.1, 2.2, 2.4, and 2.5.

(2) Hole size (where required due to bolt spacing) shall be the same as the flange bolt hole.

(3) The thickness of the web(or tie bar) dimension *W*t, shall be 0.25 inch (6.35millimeter) minimum, except when *t* is less than 0.25 inch, *W*t shall equal t.

CLASS 600, 900 FIGURE 8 BLANKS

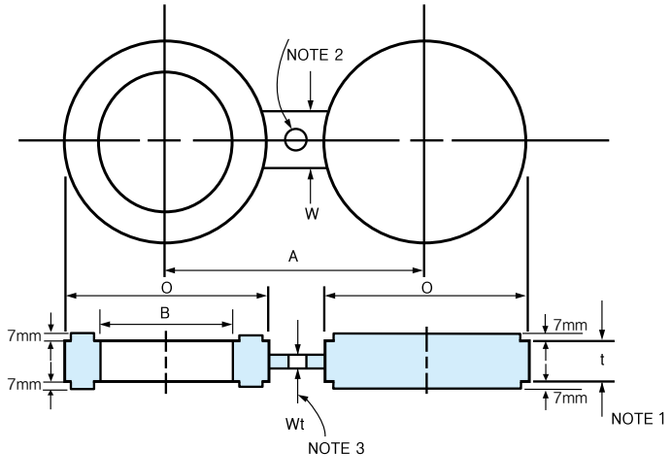

Unit : mm

SiZE	CLASS 600					CLASS 900				
	B	O	A	t	W	B	O	A	t	W
1/2	16	51	67	6.4	38	16	60	83	6	38
3/4	21	64	83	6.4	38	21	67	89	6	41
1	27	70	89	6.4	57	27	76	102	6	57
1 1/4	37	79	99	10	57	37	86	111	10	57
1 1/2	43	92	114	10	67	43	95	124	10	67
2	55	108	127	10	57	55	140	165	13	57
2 1/2	67	127	149	13	67	67	162	191	13	67
3	83	146	168	13	67	83	165	191	16	67
3 1/2	96	159	184	16	76	–	–	–	–	–
4	108	191	216	16	76	108	203	235	19	76
5	135	238	267	19	86	135	244	279	22	86
6	162	264	292	22	86	162	286	318	25	86
8	212	318	349	28	95	212	356	394	35	95
10	265	397	432	35	105	265	432	470	41	105
12	315	454	489	41	105	315	495	533	48	105
14	346	489	527	44	114	346	518	559	54	114
16	397	562	603	51	124	397	572	616	60	124
18	448	610	654	54	133	448	635	686	67	133
20	497	679	724	64	133	497	695	749	73	133
24	597	787	838	73	152	597	835	902	89	152

Notes:

(1) Thickness(dimension *t*) includes a corrosion allowance of 0.05 inch (1.3millimeters) for material groups 1.1, 1.7, 1.9, 1.10, and 1.12 Corrosion allowance is 0.00 inch for material groups 2.1, 2.2, 2.4, and 2.5.

(2) Hole size (where required due to bolt spacing) shall be the same as the flange bolt hole.

(3) The thickness of the web(or tie bar) dimension *W*t, shall be 0.25 inch (6.35millimeter) minimum, except when *t* is less than 0.25 inch, *W*t shall equal t.

CLASS 1500, 2500 FIGURE 8 BLANKS

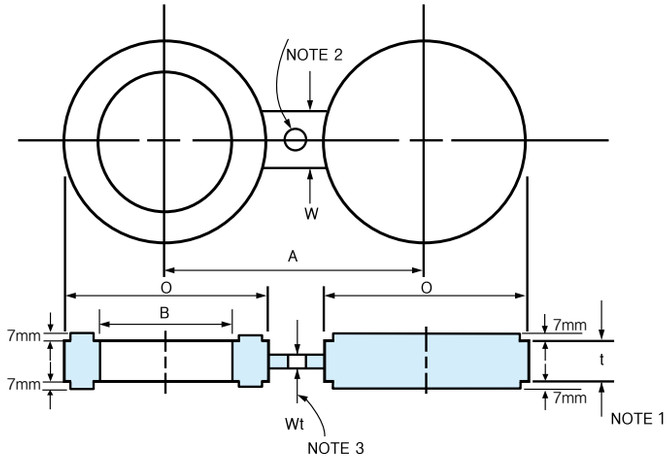

Unit : mm

SiZE	CLASS 1500					CLASS 2500				
	B	O	A	t	W	B	O	A	t	W
1/2	16	60	83	6.4	38	16	67	89	10	38
3/4	21	67	89	10	41	21	73	95	10	41
1	27	76	102	10	56	27	83	108	10	64
1 1/4	35	86	111	10	64	35	102	130	13	64
1 1/2	41	95	124	13	70	41	114	146	16	70
2	53	140	165	13	70	53	143	171	16	70
2 1/2	63	162	191	16	76	63	165	197	19	76
3	78	171	203	19	76	78	194	229	22	76
3 1/2	–	–	–	–	–	–	–	–	–	–
4	102	206	241	22	89	102	232	273	28	89
5	128	251	292	28	89	128	276	324	35	89
6	154	279	318	35	89	154	314	368	41	89
8	203	349	394	41	102	198	384	438	54	102
10	255	432	483	51	114	248	473	540	67	114
12	303	518	572	60	114	289	546	619	79	114
14	333	575	635	67	127	–	–	–	–	–
16	381	638	705	76	133	–	–	–	–	–
18	429	702	775	86	146	–	–	–	–	–
20	478	752	832	95	152	–	–	–	–	–
24	575	899	991	111	178	–	–	–	–	–

Notes:

(1) Thickness(dimension *t*) includes a corrosion allowance of 0.05 inch (1.3millimeters) for material groups 1.1, 1.7, 1.9, 1.10, and 1.12 Corrosion allowance is 0.00 inch for material groups 2.1, 2.2, 2.4, and 2.5.

(2) Hole size (where required due to bolt spacing) shall be the same as the flange bolt hole.

(3) The thickness of the web(or tie bar) dimension *W*t, shall be 0.25 inch (6.35millimeter) minimum, except when *t* is less than 0.25 inch, *W*t shall equal t.

CLASS 150 SPACER AND BLANKS

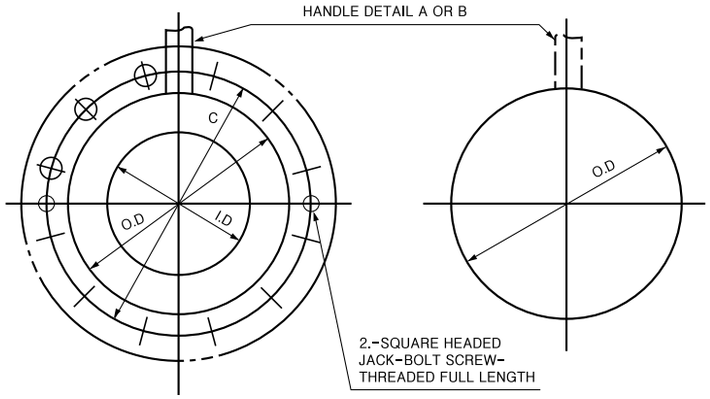

BLANK

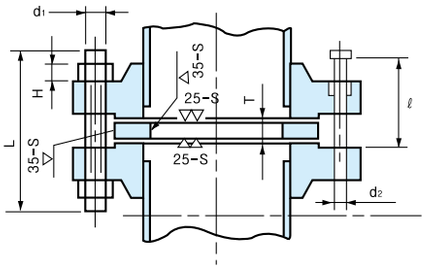

SPACER

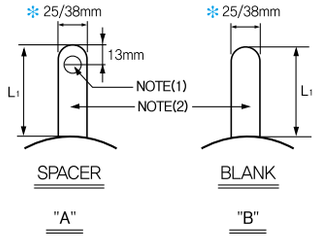

FOR THE SPACER AND BLANK
(Manufacturer Specification)

HANDLE DETAIL

✻ 3″ and below : 25mm
3 1/2 and above 38mm

Unit : mm

SIZE	SPACER & BLANK				BOLT & NUT					JACK SCREW		WEIGHT (KG)		REMARKS
	O.D	I.D	T	L1	C	D1	NO	L	H	D2	t	SPACER	BLANK	
8	276	219	13	165	298.4	M20	8	140	20	M20	75	3.6	7.8	
10	337	273	16	165	361.9	M22	12	150	22	M20	80	5.8	13.5	
12	406	324	19	165	431.8	M22	12	155	22	M20	85	9.9	22.7	
14	448	356	19	172	476.2	M27	12	175	27	M20	90	12.4	30.6	
16	511	406	22	172	539.7	M27	16	180	27	M22	90	17.0	42.8	
18	546	457	25	172	577.8	M30	16	195	30	M22	100	17.9	54.2	
20	603	508	28	178	635.0	M30	20	210	30	M22	105	24.2	73.0	
24	714	610	32	178	749.3	M33	20	230	30	M24	115	36.7	121.0	

Notes:

(1) 12Ø Hole shall only be applied to the spacer.

(2) To be die stamp on both side as follows, spacer is Spacer and blank is Blank.

(3) For dimensional tolerances

CLASS 300 SPACER AND BLANKS

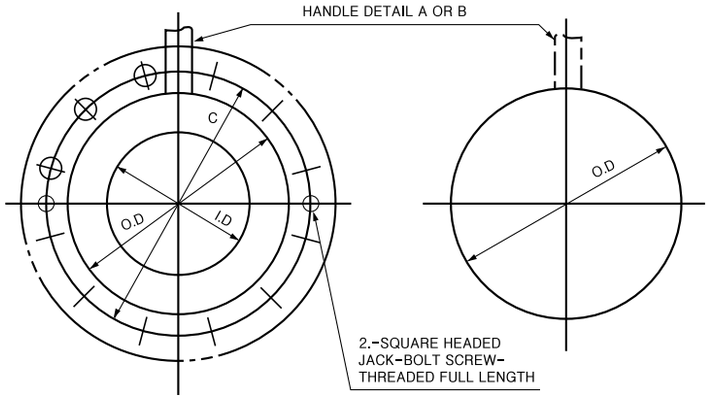

BLANK

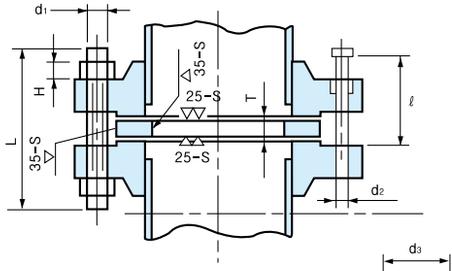

SPACER

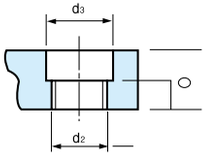

JACK BOLT SCREW

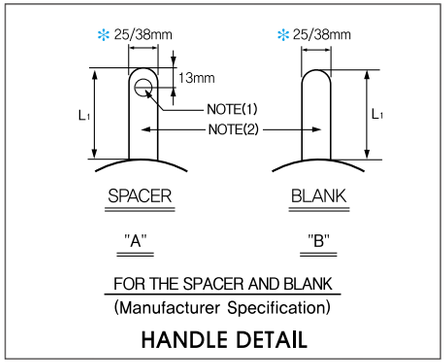

HANDLE DETAIL

✻ 3″ and below : 25mm
3 1/2 and above 38mm

Unit : mm

SIZE	SPACER & BLANK				BOLT & NUT					JACK SCREW		WEIGHT (KG)	
	O.D	I.D	T	L1	C	D1	NO	L	H	D2	t	SPACER	BLANK
8	305	219	22	150	330.2	M22	12	175	22	M20	95	7.9	14.0
10	359	273	25	165	387.3	M27	16	205	27	M20	105	11.2	22.5
12	419	324	28	165	450.8	M30	16	225	30	M20	115	17.3	37.7
14	483	356	32	170	514.3	M30	20	235	30	M22	120	27.1	54.2
16	536	406	38	170	571.5	M33	20	250	33	M22	130	34.2	73.9
18	594	457	41	175	628.6	M33	24	260	33	M22	135	44.5	101.2
20	651	508	44	175	685.8	M33	24	275	33	M24	145	56.7	134.6
24	772	610	51	180	812.8	M39	24	310	39	M24	160	89.1	222.2

Notes:
(1) 12Ø Hole shall only be applied to the spacer.
(2) To be die stamp on both side as follows, spacer is Spacer and blank is Blank.
(3) For dimensional tolerances

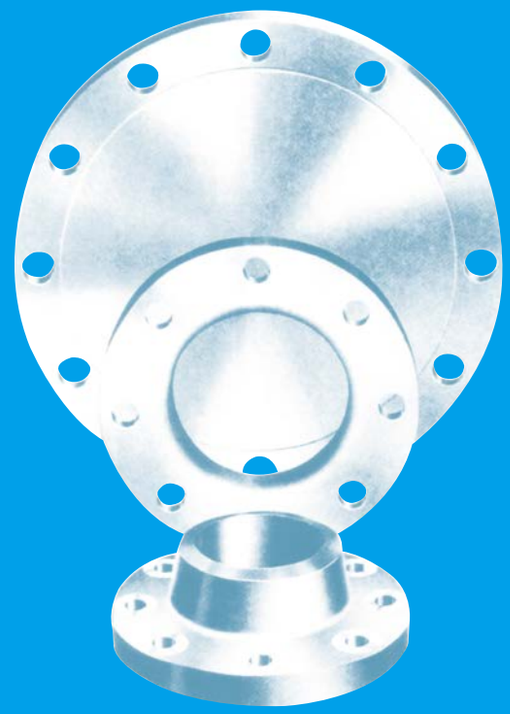

DIN FLANGES

6 – BAR (DIN 2573, 2527, 2631)
10 – BAR (DIN 2576, 2527, 2632)
16 – BAR (DIN 2543, 2527, 2633)
25 – BAR (DIN 2544, 2527, 2634)
40 – BAR (DIN 2545, 2527, 2635)

DIN 2573 SLIP-ON FLANGES
DIN 2527 BLIND FLANGES
DIN 2631 WELDING NECK FLANGES

WELDING NECK

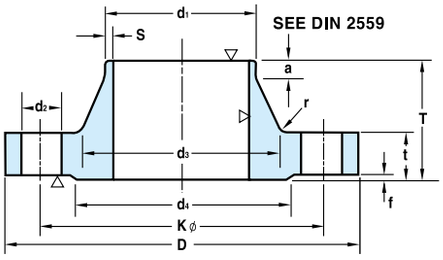

SLIP-ON

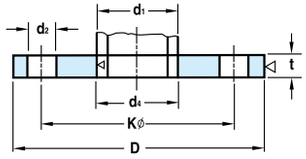

BLIND

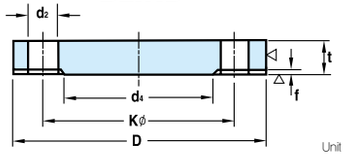

Unit : mm

Bore			Common Dimension					Hub				Raised Face		Drilling				Approx. Weight(kg)	
Nominal Bore	d1	D	t Welding Neck	t Slip-on	t Blind	k	T	d3	s	r	a ≈	d4	f	Number of Bolt	Dia. of Bolt		d2	DIN 2573	DIN 2631
10	14 17.2*	75	12	12	12	50	28	22 26	1.8	4	6	35	2	4	M10	–	11.5	0.036	0.325
15	20 21.3*	80	12	12	12	55	30	28 30	2.0	4	6	40	2	4	M10	–	11.5	0.41	0.392
20	25 26.9*	90	14	14	14	65	32	35 38	2.3	4	6	50	2	4	M10	–	11.5	0.6	0.592
25	30 33.7*	100	14	14	14	75	35	40 42	2.6	4	6	60	2	4	M10	–	11.5	0.74	0.747
32	38 42.4*	120	14	16	14	90	35	50 55	2.6	6	6	70	2	4	M12	(1/2″)	14	1.19	1.05
40	44.5 48.3*	130	14	16	14	100	38	58 62	2.6	6	7	80	3	4	M12	(1/2″)	14	1.39	1.18
50	57	140	14	16	14	110	38	70	2.9	6	8	90	3	4	M12	(1/2″)	14	1.53	1.34
65	60.3* 76.1*	160	14	16	14	130	38	74 88	2.9	6	9	110	3	4	M12	(1/2″)	14	1.89	1.67
80	88.9*	190	16	18	16	150	42	102	3.2	8	10	128	3	4	M16	(5/8″)	18	2.98	2.71
100	108 114.3*	210	16	18	16	170	45	122 130	3.6	8	10	148	3	4	M16	(5/8″)	18	3.46	3.24
125	133 139.7*	240	18	20	18	200	48	148 155	4.0	8	10	178	3	8	M16	(5/8″)	18	4.6	4.49
150	159 168.3*	265	18	20	18	225	48	172 184	4.5	10	12	202	3	8	M16	(5/8″)	18	5.22	5.15
200	216 219.1*	320	20	22	20	280	55	230 236	5.9	10	15	258	3	8	M16	(5/8″)	18	7.15	7.78
250	267 273*	375	22	24	22	335	60	282 290	6.2	12	15	312	3	12	M16	(5/8″)	18	9.61	10.8
300	318 323.9*	440	22	24	22	395	62	335 342	7.1	12	15	365	4	12	M20	(3/4″)	23	12.6	14
350	355.6* 368	490	22	26	22	445	62	385	7.1	12	15	415	4	12	M20	(3/4″)	23	15.6	16.1
400	406.4* 419	540	22	28	22	495	65	438	7.1	12	15	455	4	12	M20	(3/4″)	23	18.4	18.3
500	508* 521	645	24	30	24	600	68	538	7.1	12	15	570	4	20	M20	(3/4″)	23	24.5	24.6
600	609.6* 622	755	24			705	70	640	7.1	12	16	670	5	20	M24	(7/8″)	27		
700	711.2* 720	860	24			810	70	740	7.1	12	16	775	5	24	M24	(7/8″)	27		
800	812.8* 820	975	24			920	70	842	7.1	12	16	880	5	24	M27	(1″)	30		
900	914.4* 920	1075	26			1020	70	942	7.1	12	16	980	5	24	M27	(1″)	30		
1000	1016* 1020	1175	26			1120	70	1045	7.1	16	16	1080	5	28	M27	(1″)	30		

Notes: *Out side diameter of pipe complies with ISO recommendation R64.

DIN 2576 SLIP-ON FLANGES
DIN 2527 BLIND FLANGES
DIN 2632 WELDING NECK FLANGES

WELDING NECK

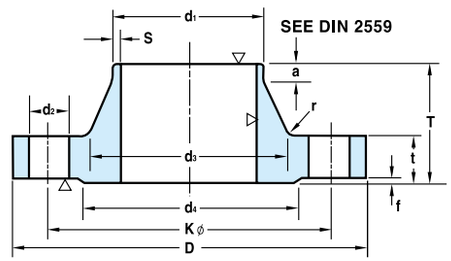

SLIP-ON

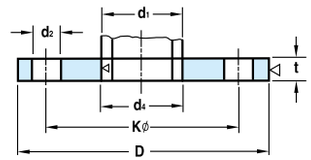

BLIND

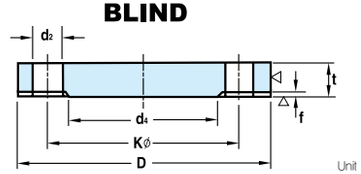

Unit : mm

Bore			Common Dimension					Hub				Raised Face		Drilling				Approx.Weight(kg)	
Nominal Bore	d1	D	t Welding Neck	t Slip-on	t Blind	k	T	d3	s	r	a ≈	d4	f	Number of Bolt	Dia. of Bolt		d2	DIN 2573	DIN 2631
10	14 17.2*	90	14	14	14	60	35	25 28	1.8	4	6	40	2	4	M12	(1/2″)	14	0.163	0.58
15	20 21.3*	95	14	14	14	65	35	30 32	2	4	6	45	2	4	M12	(1/2″)	14	0.675	0.648
20	25 26.9*	105	16	16	16	75	38	38 40	2.3	4	6	58	2	4	M12	(1/2″)	14	0.947	0.952
25	30 33.7*	115	16	16	16	85	38	42 45	2.6	4	6	68	2	4	M12	(1/2″)	14	1.14	1.14
32	38 42.4*	140	16	16	16	100	40	52 56	2.6	6	6	78	2	4	M16	(5/8″)	18	1.66	1.69
40	44.5 48.3*	150	16	16	16	110	42	60 64	2.6	6	7	88	3	4	M16	(5/8″)	18	1.89	1.86
50	57 60.3*	165	18	18	18	125	45	72 75	2.9	6	8	102	3	4	M16	(5/8″)	18	2.51	2.53
65	76.1*	185	18	18	18	145	45	90	2.9	6	10	122	3	4	M16	(5/8″)	18	3	3.06
80	88.9*	200	20	20	20	160	50	105	3.2	8	10	138	3	8	M16	(5/8″)	18	3.79	3.7
100	108 114.3*	220	20	20	20	180	52	125 131	3.6	8	12	158	3	8	M16	(5/8″)	18	4.2	4.62
125	133 139.7*	250	22	22	22	210	55	150 156	4	8	12	188	3	8	M16	(5/8″)	18	5.71	6.3
150	159 168.3*	285	22	22	22	240	55	175 184	4.5	10	12	212	3	8	M20	(3/4″)	23	6.72	7.75
200	216 219.1*	340	24	24	24	295	62	232 235	5.9	10	16	268	3	8	M20	(3/4″)	23	9.5	11.3
250	267 273*	395	26	26	26	350	68	285 292	6.3	12	16	320	3	12	M20	(3/4″)	23	12.5	14.7
300	318 323.9*	445	26	26	28	400	68	335 344	7.1	12	16	370	4	12	M20	(3/4″)	23	14.4	17.6
350	355.6* 368	505	26	28	30	460	68	385	7.1	12	16	430	4	16	M20	(3/4″)	23	20.6	21.4
400	406.4* 419	565	26	32	32	515	72	440	7.1	12	16	482	4	16	M24	(7/8″)	27	27.9	26.1
500	508* 521	670	28	38	44	620	75	542	7.1	12	16	585	4	20	M24	(7/8″)	27	41.1	34.7
600	609.6* 622	780	28			725	80	642	7.1	12	18	685	5	20	M27	(1″)	30		
700	711.2* 720	895	30			840	80	745	8	12	18	800	5	24	M27	(1″)	30		
800	812.8* 820	1015	32			950	90	850	8	12	18	905	5	24	M30	(1 1/8″)	33		
900	914.4* 920	1115	34			1050	95	950	10	12	20	1005	5	28	M30	(1 1/8″)	33		
1000	1016* 1020	1230	34			1160	95	1052	10	16	20	1110	5	28	M33	(1 1/4″)	36		

Notes: *Out side diameter of pipe complies with ISO recommendation R64.

DIN 2543 SLIP-ON FLANGES
DIN 2527 BLIND FLANGES
DIN 2633 WELDING NECK FLANGES

WELDING NECK

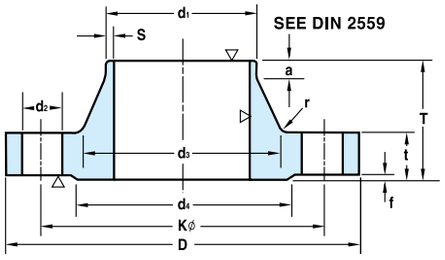

SLIP-ON

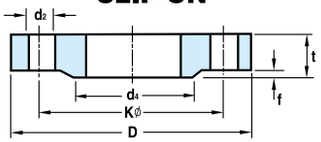

BLIND

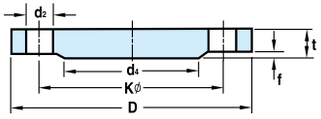

Unit : mm

Bore			Common Dimension					Hub				Raised Face		Drilling				Approx.Weight(kg)	
			t																
Nominal Bore	d1	D	Welding Neck	Slip-on (no-hub)	Blind	k	T	d3	s	r	a ≈	d4	f	Number of Bolt	Dia. of Bolt		d2	DIN 2543	DIN 2633
10	14 17.2*	90	14	14	14	60	35	25 28	1.8	4	6	40	2	4	M12	(1/2″)	14	0.63	0.58
15	20 21.3*	95	14	14	14	65	35	30 32	2	4	6	45	2	4	M12	(1/2″)	14	0.72	0.648
20	25 26.9*	105	16	16	16	75	38	38 40	2.3	4	6	58	2	4	M12	(1/2″)	14	1.01	0.952
25	30 33.7*	115	16	16	16	85	38	42 45	2.6	4	6	68	2	4	M12	(1/2″)	14	1.23	1.14
32	38 42.4*	140	16	16	16	100	40	52 56	2.6	6	6	78	2	4	M16	(5/8″)	18	1.8	1.69
40	44.5 48.3*	150	16	16	16	110	42	60 64	2.6	6	7	88	3	4	M16	(5/8″)	18	2.09	1.86
50	57	165	18	18	18	125	45	72 75	2.9	6	8	102	3	4	M16	(5/8″)	18	2.88	2.53
65	60.3* 76.1*	185	18	18	18	145	45	90	2.9	6	10	122	3	4	M16	(5/8″)	18	3.66	3.06
80	88.9*	200	20	20	20	160	50	105	2.2	8	10	138	3	8	M16	(5/8″)	18	4.77	3.7
100	108 114.3*	220	20	20	20	180	52	125 131	3.6	8	12	158	3	8	M16	(5/8″)	18	5.65	4.62
125	133 139.7*	250	22	22	22	210	55	150 156	4	8	12	188	3	8	M16	(5/8″)	18	8.42	6.3
150	159 168.3*	285	22	22	22	240	55	175 184	4.5	10	12	212	3	8	M20	(3/4″)	23	10.4	7.75
200	216 219.1*	340	24	24	24	295	62	232 235	5.9	10	16	268	3	12	M20	(3/4″)	23	16.1	11
250	267 273*	405	26	26	26	355	70	285 292	6.3	12	16	320	3	12	M24	(7/8″)	27	24.9	15.6
300	318 323.9*	460	28	28	28	410	78	338 344	7.1	12	16	378	4	12	M24	(7/8″)	27	35.1	22
350	355.6* 368	520	30	30	30	470	82	390	8	12	16	438	4	16	M24	(7/8″)	27	47.8	28.7
400	406.4* 419	580	32	32	32	525	85	445	8	12	16	490	4	16	M27	(1″)	30	63.5	36.3
500	508* 521	715	34	36	34	650	90	548	8	12	16	610	4	20	M30	(1 1/8″)	33	102	59.3
600	609.6* 622	840	36	40		770	95	652	8.8	12	18	725	5	20	M33	(1 1/4″)	36		
700	711.2* 720	910	36			840	100	755	8.8	12	18	795	5	24	M33	(1 1/4″)	36		
800	812.8* 820	1025	38			950	105	855	10	12	20	900	5	24	M36	(1 3/8″)	39		
900	914.4* 920	1125	40			1050	110	955	10	12	20	1000	5	28	M36	(1 3/8″)	39		
1000	1016* 1020	1255	42			1170	120	1058	10	16	20	1115	5	28	M39	(1 1/2″)	42		

Notes: *Out side diameter of pipe complies with ISO recommendation R64

DIN 2544 SLIP-ON FLANGES
DIN 2527 BLIND FLANGES
DIN 2634 WELDING NECK FLANGES

WELDING NECK

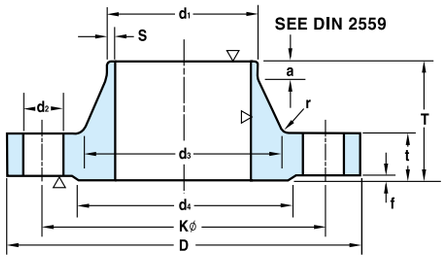

SLIP-ON

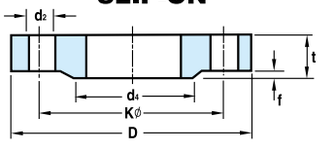

BLIND

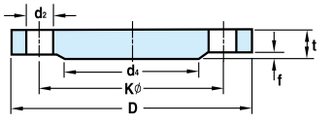

Unit : mm

Bore			Common Dimension					Hub				Raised Face		Drilling				Approx.Weight(kg)	
			t																
Nominal Bore	d1	D	Welding Neck	Slip-on (no-hub)	Blind	k	T	d3	s	r	a ≈	d4	f	Number of Bolt	Dia. of Bolt		d2	DIN 2544	DIN 2634
10	14 17.2*	90	16	16	16	60	35	25 28	1.8	4	6	40	2	4	M12	(1/2″)	14	0.72	0.661
15	20 21.3*	95	16	16	16	65	38	30 32	2	4	6	45	2	4	M12	(1/2″)	14	0.81	0.746
20	25 26.9*	105	18	18	18	75	40	38 40	2.3	4	6	58	2	4	M12	(1/2″)	14	1.24	1.06
25	30 33.7*	115	18	18	18	85	40	42 46	2.6	4	6	68	2	4	M12	(1/2″)	14	1.38	1.29
32	38 42.4*	140	18	18	18	100	42	52 56	2.6	6	6	78	2	4	M16	(5/8″)	18	2.03	1.88
40	44.5 48.3*	150	18	18	18	110	45	60 64	2.6	6	7	88	3	4	M16	(5/8″)	18	2.35	2.34
50	57	165	20	20	20	125	48	72 75	2.9	6	8	102	3	4	M16	(5/8″)	18	3.2	2.82
65	60.3* 76.1*	185	22	22	22	145	52	90	2.9	6	10	122	3	8	M16	(5/8″)	18	4.29	3.74
80	88.9*	200	24	24	24	160	58	105	3.2	8	12	138	3	8	M16	(5/8″)	18	5.88	4.75
100	108 114.3*	235	24	24	24	190	65	128 134	3.6	8	12	162	3	8	M20	(3/4″)	23	7.54	6.52
125	133 139.7*	270	26	26	26	220	68	155 162	4	8	12	188	3	8	M24	(7/8″)	27	10.8	9.07
150	159 168.3*	300	28	28	28	250	75	182 192	4.5	10	12	218	3	8	M24	(7/8″)	27	14.5	11.8
200	216 219.1*	360	30	30	30	310	80	240 244	6.3	10	16	278	3	12	M24	(7/8″)	27	22.3	17
250	267 273*	425	32	32	32	370	88	292 298	7.1	12	18	335	3	12	M27	(1″)	30	33.5	24.4
300	318 323.9*	485	34	34	34	430	92	345 352	8	12	18	395	4	16	M27	(1″)	30	46.3	31.2
350	355.6* 368	555	38	38	38	490	100	398	8	12	20	450	4	16	M30	(1 1/4″)	33	68	45
400	406.4* 419	620	40	40	40	550	110	452	8.8	12	20	505	4	16	M33	(1 1/4″)	36	89.7	58.7
500	508* 521	730	44	44	44	660	125	558	10	12	20	615	4	20	M33	(1 1/4″)	36	138	86.1
600	609.6* 622	845	46	46		770	125	660	11	12	20	720	5	20	M36	(1 3/8″)	39		101
700	711.2* 720	960	46	46		875	125	760	12.5	12	20	820	5	24	M39	(1 1/2″)	42		134
800	812.8* 820	1085	50	50		990	135	865	14.2	12	22	930	5	24	M45	(1 3/4″)	48		183
900	914.4* 920	1185	54	54		1090	145	968	16	12	24	1030	5	28	M45	(1 3/4″)	48		232
1000	1016* 1020	1320	58	58		1210	155	1070	17.5	16	24	1140	5	28	M52	(2″)	56		302

Notes: *Out side diameter of pipe complies with ISO recommendation R64

40 BAR

DIN 2545 SLIP-ON FLANGES
DIN 2527 BLIND FLANGES
DIN 2635 WELDING NECK FLANGES

WELDING NECK

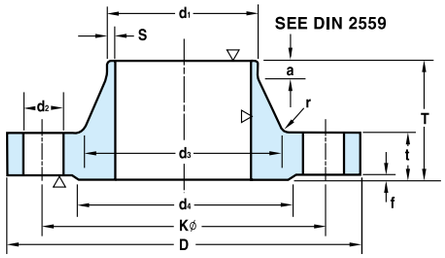

SLIP-ON

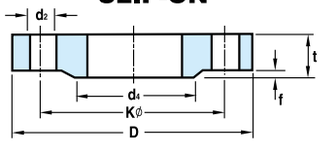

BLIND

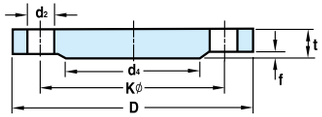

Unit : mm

Bore			Common Dimension					Hub				Raised Face		Drilling				Approx.Weight(kg)	
Nominal Bore	d1	D	t Welding Neck	t Slip-on (no-hub)	t Blind	k	T	d3	s	r	a ≈	d4	f	Number of Bolt	Dia. of Bolt		d2	DIN 2544	DIN 2634
10	14 17.2*	90	16	16	16	60	35	25 28	1.8	4	6	40	2	4	M12	(1/2")	14	0.72	0.661
15	20 21.3*	95	16	16	16	65	38	30 32	2	4	6	45	2	4	M12	(1/2")	14	0.81	0.746
20	25 26.9*	105	18	18	18	75	40	38 40	2.3	4	6	58	2	4	M12	(1/2")	14	1.24	1.06
25	30 33.7*	115	18	18	18	85	40	42 46	2.6	4	6	68	2	4	M12	(1/2")	14	1.38	1.29
32	38 42.4*	140	18	18	18	100	42	52 56	2.6	6	6	78	2	4	M16	(5/8")	18	2.03	1.88
40	44.5 48.3*	150	18	18	18	110	45	60 64	2.6	6	7	88	3	4	M16	(5/8")	18	2.35	2.33
50	57 60.3*	165	20	20	20	125	48	72 75	2.9	6	8	102	3	4	M16	(5/8")	18	3.2	2.82
65	76.1*	185	22	22	22	145	52	90	2.9	6	10	122	3	8	M16	(5/8")	18	4.29	3.74
80	88.9*	200	24	24	24	160	58	105	3.2	8	12	138	3	8	M16	(5/8")	18	5.88	4.75
100	108 114.3*	235	24	24	24	190	65	128 134	3.6	8	12	162	3	8	M20	(3/4")	23	7.54	6.52
125	133 139.7*	270	26	26	26	220	68	155 162	4	8	12	188	3	8	M24	(7/8")	27	10.8	9.07
150	159 168.3*	300	28	28	28	250	75	182 192	4.5	10	12	218	3	8	M24	(7/8")	27	14.5	11.8
(175)	(191) 193.7*	350	32	32	32	295	82	215 218	5.6	10	15	260	3	12	M27	(1")	30	22.1	18.2
200	216 219.1*	375	34	34	34	320	88	240 244	6.3	10	16	285	3	12	M27	(1")	30	27.2	21.5
250	267 273*	450	38	38	38	385	105	298 306	7.1	12	18	345	3	12	M30	(11/8")	33	43.8	34.9
300	318 323.9*	515	42	42	42	450	115	352 362	8	12	18	410	4	16	M30	(11/8")	33	63.3	49.7
350	355.6* 368	580	46	46	46	510	125	408	8.8	12	20	465	4	16	M33	(11/4")	36	89.5	68.1
400	406.4* 419	660	50	50	50	585	135	462	11	12	20	535	4	16	M36	(13/8")	39	127	96.5
500	508* 521	755	52	52	52	670	140	562	14.2	12	20	615	4	20	M39	(11/2")	42	172	117.0

Notes: *Out side diameter of pipe complies with ISO recommendation R64

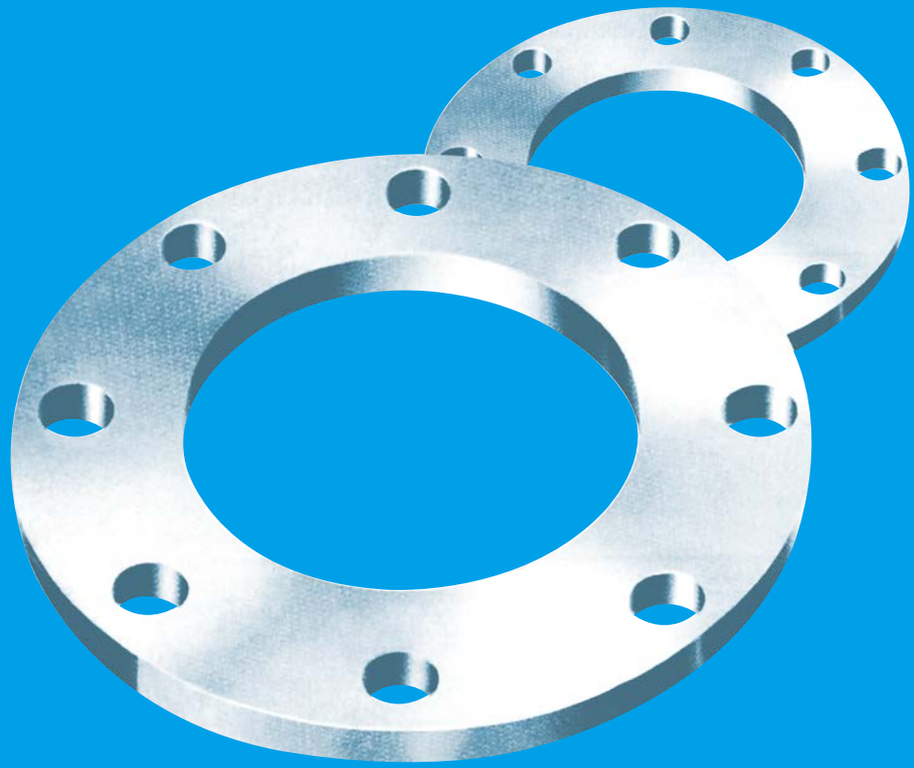

JIS & KS FLANGES

Class 5K FLANGES
Class 10K FLANGES
Class 16K FLANGES
Class 20K FLANGES
Class 30K FLANGES
Class 40K FLANGES
Class 210Kgf/cm² FLANGE FOR OIL PRESSURE
Class 280Kgf/cm² FLANGE FOR OIL PRESSURE
Class 350Kgf/cm² FLANGE FOR OIL PRESSURE
TOLERANCE FOR PIPE FLANGES

5K KS B1503 / JIS B2220

NOMINAL SIZE 10−400mm

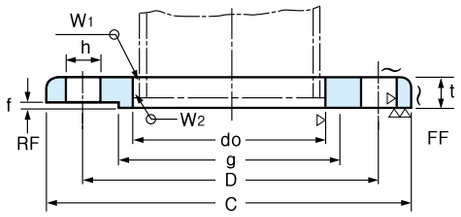

NOMINAL SIZE 450−1500mm

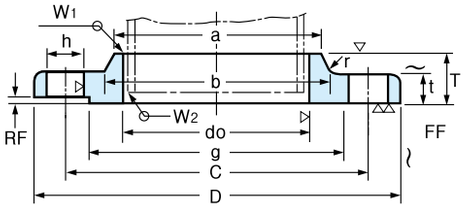

Unit : mm

Nominal Bore of Flange	Outside Dia. of Appli-Cable Pipe	Inside Dia. of Flange	Outside Dia. of Flange	Sectional Dimensions of Flange							Dia. of Bolt			Nomi-nal Bolt Size	Welding		Weight (Kg)
				t	T	Dia. of Hub		Rad-ius	Raised Face	Dia.of Raised Face	Dia.of Bolt Circle	Number of Bolt Holes	Hole Dia.		W1	W2	
		do	D			a	b	r	f	g	c		h				
(10)	17.3	17.8	75	9	–	–	–	–	1	39	55	4	12	M10	5	2.5	0.27
15	21.7	22.2	80	9	–	–	–	–	1	44	60	4	12	M10	5	3	0.30
(20)	27.2	27.7	85	10	–	–	–	–	1	49	65	4	12	M10	5	3	0.37
25	34.0	34.5	95	10	–	–	–	–	1	59	75	4	12	M10	5	3	0.45
(32)	42.7	43.2	115	12	–	–	–	–	2	70	90	4	15	M12	6	3	0.78
40	48.6	49.1	120	12	–	–	–	–	2	75	95	4	15	M12	6	3	0.83
50	60.5	61.1	130	14	–	–	–	–	2	85	105	4	15	M12	6	3	1.07
65	76.3	77.1	155	14	–	–	–	–	2	110	130	4	15	M12	6	4	1.49
80	89.1	90.0	180	14	–	–	–	–	2	121	145	4	19	M16	6	4	1.99
(90)	101.6	102.6	190	14	–	–	–	–	2	131	155	4	19	M16	6	4	2.09
100	114.3	115.4	200	16	–	–	–	–	2	141	165	8	19	M16	7	4	2.39
125	139.8	141.2	235	16	–	–	–	–	2	176	200	8	19	M16	7	4	3.23
150	165.2	166.6	265	18	–	–	–	–	2	206	230	8	19	M16	7	5	4.41
(175)	190.7	192.1	300	18	–	–	–	–	2	232	260	8	23	M20	7.5	5	5.51
200	216.3	218.0	320	20	–	–	–	–	2	252	280	8	23	M20	8.5	6	6.33
(225)	241.8	243.7	345	20	–	–	–	–	2	277	305	12	23	M20	9	6	6.64
250	267.4	269.5	385	22	–	–	–	–	2	317	345	12	23	M20	10	6	9.45
300	318.5	321.0	430	22	–	–	–	–	3	360	390	12	23	M20	10	6	10.30
350	355.6	358.1	480	24	–	–	–	–	3	403	435	12	25	M22	12	7	14.00
400	406.4	409.0	540	24	–	–	–	–	3	463	495	16	25	M22	12	7	16.90
450	457.2	460.0	605	24	40	495	500	5	3	523	555	16	25	M22	12	7	24.80
500	508.0	511.0	655	24	40	546	552	5	3	573	605	20	25	M22	12	7	26.90
550	558.8	562.0	720	26	42	597	603	5	3	630	665	20	27	M24	12	7	34.10
600	609.6	613.0	770	26	44	648	654	5	3	680	715	20	27	M24	12	7	37.50
650	660.4	664.0	825	26	48	702	708	5	3	735	770	24	27	M24	12	7	42.80
700	711.2	715.0	875	26	48	751	758	5	3	785	820	24	27	M24	12	7	45.40
750	762.0	766.0	945	28	52	802	810	5	3	840	880	24	33	M30	12	7	57.40
800	812.8	817.0	995	28	52	854	862	5	3	890	930	24	33	M30	13	8	60.80
850	863.6	868.0	1045	28	54	904	912	5	3	940	980	24	33	M30	13	8	63.50
900	914.4	919.0	1095	30	56	956	964	5	3	990	1030	24	33	M30	13	8	75.30
1000	1016.0	1021.0	1195	32	60	1058	1066	5	3	1090	1130	28	33	M30	14	9	88.50
*(1100)	1117.6	1122	1305	32	71	1158	1170	7	3	1200	1240	28	33	M30			
*1200	1219.2	1224	1420	34	77	1260	1272	7	3	1305	1350	32	33	M30			
*1350	1371.6	1376	1575	34	80	1414	1426	7	3	1460	1505	32	33	M30			
*1500	1524.0	1529	1730	36	86	1568	1580	7	3	1615	1660	36	33	M30			

Notes:

1. Flanges of parenthesized nominal diameter had letter not be used.
2. The facing of flanges shall conform to KS B1519(JIS B2202) 1987.
3. Nominal diameter over 1000 is manufacturer' s standard(*).

10K KS B1503 / JIS B2220

NOMINAL SIZE 10−225mm

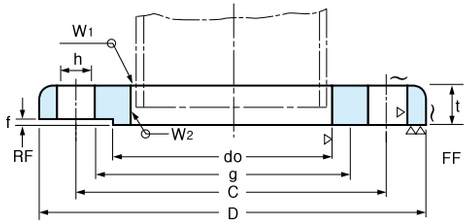

NOMINAL SIZE 250−1500mm

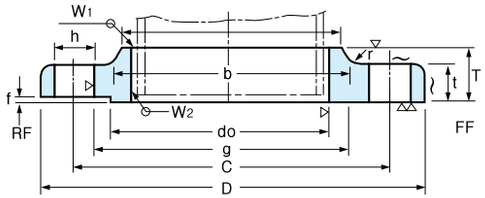

Unit : mm

Nominal Bore of Flange	Outside Dia. of Appli-Cable Pipe	Inside Dia. of Flange	Outside Dia. of Flange	Sectional Dimensions of Flange							Dia. of Bolt			Nomi-nal Bolt Size	Welding		Weight (Kg)
				t	T	Dia. of Hub		Rad-ius	Raised Face	Dia.of Raised Face	Dia.of Bolt Circle	Number of Bolt Holes	Hole Dia.		W1	W2	
		do	D			a	b	r	f	g	c		h				
10	17.3	17.8	90	12	–	–	–	–	1	46	65	4	15	M12	5	2.5	0.52
15	21.7	22.2	95	12	–	–	–	–	1	51	70	4	15	M12	5	3	0.57
20	27.2	27.7	100	14	–	–	–	–	1	56	75	4	15	M12	5	3	0.73
25	34.0	34.5	125	14	–	–	–	–	1	67	90	4	19	M16	5	3	1.13
32	42.7	43.2	135	16	–	–	–	–	2	76	100	4	19	M16	6	3	1.48
40	48.6	49.1	140	16	–	–	–	–	2	81	105	4	19	M16	6	3	1.56
50	60.5	61.1	155	16	–	–	–	–	2	96	120	4	19	M16	6	3	1.88
65	76.3	77.1	175	18	–	–	–	–	2	116	140	4	19	M16	6.5	4	2.6
80	89.1	90.0	185	18	–	–	–	–	2	126	150	8	19	M16	6.5	4	2.61
(90)	101.6	102.6	195	18	–	–	–	–	2	136	160	8	19	M16	6.5	4	2.76
100	114.3	115.4	210	18	–	–	–	–	2	151	175	8	19	M16	7	4	3.14
125	139.8	141.2	250	20	–	–	–	–	2	182	210	8	23	M20	7.5	4	4.77
150	165.2	166.6	280	22	–	–	–	–	2	212	240	8	23	M20	8	5	6.34
(175)	190.7	192.1	305	22	–	–	–	–	2	237	265	12	23	M20	9	5	6.82
200	216.3	218.0	330	22	–	–	–	–	2	262	290	12	23	M20	9	6	7.53
(225)	241.8	243.7	350	22	–	–	–	–	2	282	310	12	23	M20	9	6	7.74
250	267.4	269.5	400	24	36	288	292	6	2	324	355	12	25	M22	10	6	12.7
300	318.5	321.0	445	24	38	340	346	6	3	368	400	16	25	M22	10	6	13.8
350	355.6	358.1	490	26	42	380	386	6	3	413	445	16	25	M22	12	7	18.2
400	406.4	409.0	560	28	44	436	442	6	3	475	510	16	27	M24	12	7	25.2
450	457.2	460.0	620	30	48	496	502	6	3	530	565	20	27	M24	14	8	33
500	508.0	511.0	675	30	48	548	554	6	3	585	620	20	27	M24	14	8	37.6
550	558.8	562.0	745	32	52	604	610	6	3	640	680	20	33	M30	15	9	49.7
600	609.6	613.0	795	32	52	656	662	6	3	690	730	24	33	M30	16	10	52.6
650	660.4	664.0	845	34	56	706	712	6	3	740	780	24	33	M30	16	10	60.6
700	711.2	715.0	905	34	58	762	770	6	3	800	840	24	33	M30	17	10	70.6
750	762.0	766.0	970	36	62	816	824	6	3	855	900	24	33	M30	18	11	85.8
800	812.8	817.0	1020	36	64	868	876	6	3	905	950	28	33	M30	19	12	91.2
(850)	863.6	868.0	1070	36	66	920	928	6	3	955	1000	28	33	M30	19	12	98.6
900	914.4	919.0	1120	38	70	971	979	6	3	1005	1050	28	33	M30	22	14	109
1000	1016.0	1021.0	1235	40	74	1073	1081	6	3	1110	1160	28	39	M36	22	14	133
*(1100)	1117.6	1122	1345	42	95	1175	1185	8	3	1220	1270	28	39	M36			
*1200	1219.2	1224	1465	44	101	1278	1290	8	3	1325	1380	32	39	M36			
*1350	1371.6	1376	1630	48	110	1432	1450	8	3	1480	1540	36	45	M42			
*1500	1524.0	1529	1795	50	123	1585	1605	8	3	1635	1700	40	45	M42			

Notes:

1. Flanges of parenthesized nominal diameter had letter not be used.
2. The facing of flanges shall conform to KS B1519(JIS B2202) 1987.
3. Nominal diameter over 1000 is manufacturer' s standard(*).

16K KS B1503 / JIS B2220

NOMINAL SIZE 10–600mm

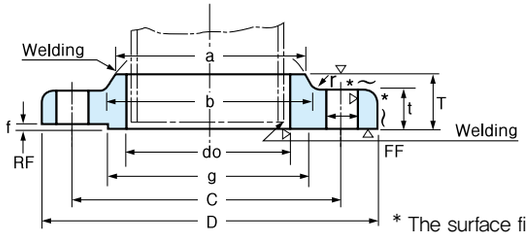

* The surface finish(~) is in the case of die forging.

NOMINAL SIZE 650–1200mm

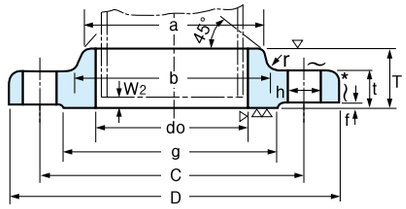

Unit : mm

Nominal Bore of Flange	Outside Dia. of Steel Pipe	Inside Dia. of Flange	Outside Dia. of Flange	Sectional Dimensions of Flange							Bolt Hole			Nomi-nal Bolt Size	Approx. Weight (Kg)
				t	T	Dia. of Hub		Rad-ius	Raised Face	Dia.of Raised Face	Bolt Circle dia.	Number of Bolt Holes	Hole Dia.		
		do	D			a	b	r	f	g	c		h		
10	17.3	17.8	90	12	16	26	28	4	1	46	65	4	15	M12	0.52
15	21.7	22.2	95	12	16	30	32	4	1	51	70	4	15	M12	0.58
20	27.2	27.7	100	14	20	38	42	4	1	56	75	4	15	M12	0.75
25	34.0	34.5	125	14	20	46	50	4	1	67	90	4	19	M16	1.16
32	42.7	43.2	135	16	22	56	60	5	2	76	100	4	19	M16	1.53
40	48.6	49.1	140	16	24	62	66	5	2	81	105	4	19	M16	1.64
50	60.5	61.1	155	16	24	76	80	5	2	96	120	8	19	M16	1.83
65	76.3	77.1	175	18	26	94	98	5	2	116	140	8	19	M16	2.58
80	89.1	90.0	200	20	28	108	112	6	2	132	160	8	23	M20	3.66
(90)	101.6	102.6	210	20	30	120	124	6	2	145	170	8	23	M20	3.95
100	114.3	115.4	225	22	34	134	138	6	2	160	185	8	23	M20	4.94
125	139.8	141.2	270	22	34	164	170	6	2	195	225	8	25	M22	7.00
150	165.2	166.6	305	24	38	196	202	6	2	230	260	12	25	M22	9.62
200	216.3	218.0	350	26	40	244	252	6	2	275	305	12	25	M22	12.1
250	267.4	269.5	430	28	44	304	312	6	2	345	380	12	27	M24	20.0
300	318.5	321.0	480	30	48	354	364	8	3	395	430	16	27	M24	24.4
350	355.6	358.1	540	34	52	398	408	8	3	440	480	16	33	M30×3	35.0
400	406.4	409.0	605	38	60	446	456	10	3	495	540	16	33	M30×3	46.2
450	457.2	460.0	675	40	64	504	514	10	3	560	605	20	33	M30×3	61.9
500	508.0	511.0	730	42	68	558	568	10	3	615	660	20	33	M30×3	73.25
(550)	558.8	562.0	795	44	70	612	622	10	3	670	720	20	39	M36×3	88.1
600	609.6	613.0	845	46	74	666	676	10	3	720	770	24	39	M36×3	98.8
* 650	660.4	664	895	48	77	704	726	10	5	770	820	24	39	M36×3	101
* 700	711.2	715	960	50	80	754	776	10	5	820	875	24	42	M39×3	120
* 750	762.0	766	1020	52	83	806	832	10	5	880	935	24	42	M39×3	141
* 800	812.8	817	1085	54	86	865	885	10	5	930	990	24	48	M45×3	161
* 850	863.6	868	1135	56	89	916	936	10	5	980	1040	24	48	M45×3	177
* 900	914.4	919	1185	58	93	968	986	10	5	1030	1090	28	48	M45×3	191
* 1000	1016.0	1021	1320	62	99	1070	1098	12	5	1140	1210	28	56	M52×3	230
* (1100)	1117.6	1123	1420	66	105	1180	1200	12	5	1240	1310	32	56	M52×3	289
* 1200	1219.2	1225	1530	70	112	1282	1302	12	5	1350	1420	32	56	M52×3	348

Notes:

1. Flanges of parethesized nominal diameter had better not be used.
2. The facing of flanges shall conform to KS B1519 (JIS B2202) 1987.
3. The dimension of flange of 650A and larger in nominal sizes excluding 850A, are in accordance with the nominal pressure 25 BAR specified in ISO2084–1974.
4. * : Norminal diameter over 1000 is manufacturer' s standard

20K KS B1503 / JIS B2220

TYPE A
NOMINAL SIZE 10–50mm

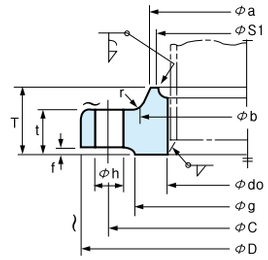

TYPE B
NOMINAL SIZE 10–50mm

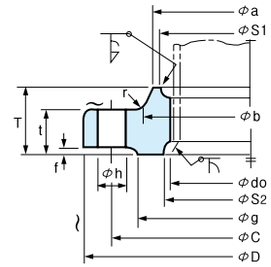

TYPE C
NOMINAL SIZE 65–600mm

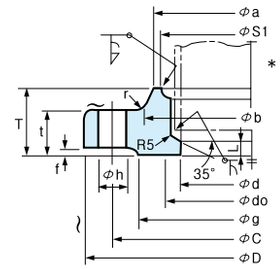

* The surface finish(~) is in the case of die forging.

Unit : mm

Nominal Bore of Flange	Outside Dia. of Steel Pipe	Inside Dia. of Flange	Outside Dia. of Flange	Sectional Dimensions of Flange								Bolt Hole			Nomi-nal Bolt Size	Reference					Approx. Weight (Kg)
				t	T	Dia. of Hub		Rad-ius	Raised Face	Dia.of Raised Face	Inside Dia. of Flange	Bolt Circle dia.	Number of Bolt Holes	Hole Dia.		S1	m	S2	n	l	
		do	D			a	b	r	f	g	d	c		h							
10	17.3	17.8	90	14	20	30	32	4	1	46	12.7	65	4	15	M12	27	4	27	4	–	0.59
15	21.7	22.2	95	14	20	34	36	4	1	51	16.1	70	4	15	M12	31	4	31	4	–	0.65
20	27.2	27.7	100	16	22	40	42	4	1	56	21.4	75	4	15	M12	37	4	37	4	–	0.81
25	34.0	34.5	125	16	24	48	50	4	1	67	27.2	90	4	19	M16	44	4	44	4.5	–	1.29
32	42.7	43.2	135	18	26	56	60	5	2	76	35.5	100	4	19	M16	52	4	53	5	–	1.60
40	48.6	49.1	140	18	26	62	66	5	2	81	41.2	105	4	19	M16	58	4	59	5.5	–	1.69
50	60.5	61.1	155	18	26	76	80	5	2	96	52.7	120	8	19	M16	70	4	72	5.5	–	1.89
65	76.3	77.1	175	20	30	100	104	5	2	116	65.9	140	8	19	M16	94	6	–	–	6	2.60
80	89.1	90.0	200	22	34	113	117	6	2	132	78.1	160	8	23	M20	107	6	–	–	6	3.93
(90)	101.6	102.6	210	24	36	126	130	6	2	145	90.2	170	8	23	M20	120	6	–	–	6	4.56
100	114.3	115.4	225	24	36	138	142	6	2	160	102.3	185	8	23	M20	132	6	–	–	6	5.13
125	139.8	141.2	270	26	40	166	172	6	2	195	126.6	225	8	25	M22	160	7	–	–	6	8.30
150	165.2	166.6	305	28	42	196	202	6	2	230	151.0	260	12	25	M22	186	8	–	–	6	10.6
200	216.3	218.0	350	30	46	244	252	6	2	275	199.9	305	12	25	M22	237	9	–	–	6	13.3
250	267.4	269.5	430	34	52	304	312	6	2	345	248.8	380	12	27	M24	290	10	–	–	6	23.4
300	318.5	321.0	480	36	56	354	364	8	3	395	297.9	430	16	27	M24	345	11	–	–	6	27.7
350	355.6	358.1	540	40	62	398	408	8	3	440	333.4	480	16	33	M30×3	384	12	–	–	6	39.2
400	406.4	409.0	605	46	70	446	456	10	3	495	381.0	540	16	33	M30×3	437	13	–	–	7	54.2
450	457.2	460.0	675	48	78	504	514	10	3	560	431.8	605	20	33	M30×3	490	15	–	–	7	71.7
500	508.0	511.0	730	50	84	558	568	10	3	615	482.6	660	20	33	M30×3	544	16	–	–	7	86.2
(550)	558.8	562.0	795	52	90	612	622	10	3	670	533.4	720	20	39	M36×3	595	16	–	–	7	105
600	609.6	613.0	845	54	96	666	676	10	3	720	584.2	770	24	39	M36×3	646	18	–	–	7	119
* 650	660.4	664	945	60					5	790		850	24	48	M45×3						
* 700	711.2	715	995	64					5	840		900	24	48	M45×3						
* 750	762.0	766	1080	68					5	900		970	24	56	M52×3						
* 800	812.8	817	1140	72					5	960		1030	24	56	M52×3						
* 850	863.6	868	1200	74					5	1020		1090	24	56	M52×3						
* 900	941.4	919	1250	76					5	1070		1140	28	56	M52×3						

Notes:

1. Flanges of parenthesized nominal diameter had better not be used.
2. "d" is an example of pipe thickness for schedule 40 for nominal diameter 400 and under, and for schedule 12.7mm for 450 through 600 of KS D3562 and KS D3507 (JIS G3454, JIS G3456).
3. The dimension of the notch (m, N, S_1, S_2) for welding can decided between concerned parties.
4. Nominal diameter over 600 is manufacturer' s standard.

40kg/cm² SLIP-ON WELDING PIPE FLANGES

NOMINAL SIZE 10-50mm (TYPE B)

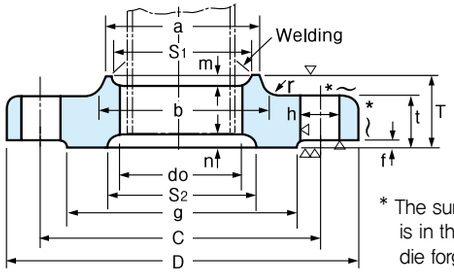

* The surface finish(~) is in the case of die forging.

NOMINAL SIZE 65-400mm (TYPE C)

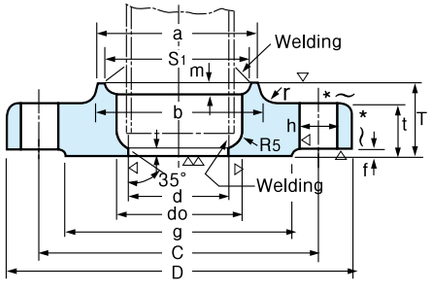

NOMINAL SIZE 10-65mm

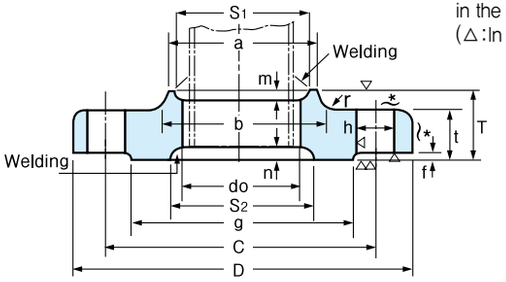

* The surface finish is in the case of forging. (△:In other cases)

NOMINAL SIZE 65-400mm

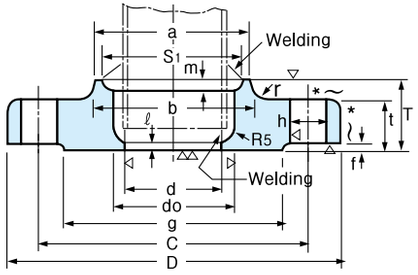

Unit : mm

Nominal Bore of Flange	Outside Dia. of Steel Pipe	Inside Dia. of Flange	Outside Dia. of Flange	Sectional Dimensions of Flange								Bolt Hole			Nominal Bolt Size	Reference					Approx. Weight (Kg)
				t	T	Dia. of Hub		Radius	Raised Face	Dia.of Raised Face	Inside Dia. of Flange	Bolt Circle dia.	Number of Bolt Holes	Hole Dia.		S1	m	S2	n	l	
		do	D			a	b	r	f	g	d	c		h							
10	17.3	17.8	110	16	24	30	34	4	1	52	–	75	4	19	M16	–	–	–	–	–	0.99
15	21.7	22.2	115	18	26	36	40	5	1	55	16.1	80	4	19	M16	31	4	40	5	–	1.23
20	27.2	27.7	120	18	28	42	46	5	1	60	21.4	85	4	19	M16	37	5	44	5	–	1.34
25	34.0	34.5	130	20	30	50	54	5	1	70	27.2	95	4	19	M16	44	6	52	5	–	1.76
32	42.7	43.2	140	22	32	60	64	6	2	80	35.5	105	4	19	M16	52	6	60	5	–	2.15
40	48.6	49.1	160	22	34	66	70	6	2	90	41.2	120	4	23	M20	58	6	66	5	–	2.82
50	60.5	61.1	165	22	36	82	86	6	2	105	52.7	130	8	19	M16	70	6.5	78	5	–	2.89
65	76.3	77.1	200	26	40	102	106	8	2	130	65.9	160	8	23	M20	96	9.5	94	5	6	4.70
80	89.1	90.0	210	28	44	115	121	8	2	140	78.1	170	8	23	M20	109	9.5	–	–	6	5.36
90	101.6	102.6	230	30	46	128	134	8	2	150	90.2	185	8	25	M22	122	9.5	–	–	6	6.85
100	114.3	115.4	240	32	48	141	147	8	2	160	102.3	195	8	25	M22	135	9.5	–	–	6	7.89
125	139.8	141.2	275	36	54	166	172	8	2	195	126.6	230	8	25	M22	160	9.5	–	–	6	11.4
150	165.2	166.6	325	38	58	196	204	8	2	235	151.0	275	12	27	M24	186	9.5	–	–	6	16.7
200	216.3	218.0	370	42	64	248	256	8	2	280	199.9	320	12	27	M24	237	9.5	–	–	6	20.6
250	267.4	269.5	450	48	72	306	314	10	2	345	248.8	390	12	33	M30X3	290	10	–	–	6	36.1
300	318.5	321.0	515	52	78	360	370	10	3	405	297.9	450	16	33	M30X3	345	12	–	–	6	49.9
350	355.6	358.1	560	54	84	402	412	12	3	450	333.4	495	16	33	M30X3	383	13	–	–	6	61.2
400	406.4	409.0	630	60	92	456	468	15	3	510	381.0	560	16	39	M36X3	435	14	–	–	7	85.2

Notes:

1. Flanges of parenthesized nominal diameter had better not be used.
2. "d" is an example of pipe thickness for schedule 40 of KS D3562 and KS D3507 (JIS G3454, JIS G3456). if required, purchaser can specify for other pipe wall thickness.
3. This diameters of bolt holes(h) shall be in accordance with Class 3 of KS B1007 (Grade 3 of JIS B1001) where the nominal designation of screw thread of bolt is not more than M16, and in accordance with Class 2 of KS B1007 (Grade 2 of JIS B1001) where the nominal designation of screw thread of bolt is not less than M30×3.
4. The dimension of the notch (m, n, S_1, S_2) for welding can decide between concerned parties agreement between parties concerned.

Unit : mm

Nominal Bore of Flange	Outside Dia. of Steel Pipe	Inside Dia. of Flange	Outside Dia. of Flange	Sectional Dimensions of Flange								Bolt Hole			Nominal Bolt Size	Reference					Approx. Weight (Kg)
				t	T	Dia. of Hub		Radius	Raised Face	Dia.of Raised Face	Inside Dia. of Flange	Bolt Circle dia.	Number of Bolt Holes	Hole Dia.		S1	m	S2	n	l	
		do	D			a	b	r	f	g	d	c		h							
10	17.3	17.8	110	18	26	34	38	5	1	52	–	75	4	19	M16	28.0	6	28.0	5		1.11
15	21.7	22.2	115	20	30	39	43	5	1	55	–	80	4	19	M16	32.5	6	32.5	5		1.39
20	27.2	27.7	120	20	30	45	49	5	1	60	–	85	4	19	M16	38.0	6	38.0	5		1.51
25	34.0	34.5	130	22	32	55	59	5	1	70	–	95	4	19	M16	47.8	6	47.8	5		1.97
32	42.7	43.2	140	24	35	64	68	6	2	80	–	105	4	19	M16	56.5	6	56.5	5		2.50
40	48.6	49.1	160	24	35	70	74	6	2	90	–	120	4	23	M20	62.5	6	62.5	5		3.26
50	60.5	61.1	165	26	38	86	90	6	2	105	–	130	8	19	M16	74.5	6	74.5	5.5		3.47
65	76.3	77.1	200	30	44	106	110	8	2	130	62.3	160	8	23	M20	91.5	7	91.5	7		5.97
80	89.1	90.3	210	32	46	118	124	8	2	140	73.9	170	8	23	M20	105.5	7.5	105.5	7		6.76
100	114.3	115.5	250	36	52	145	151	8	2	165	97.1	205	8	25	M22	133.0	8.5	133.0	7		10.48
125	139.8	141.4	300	40	58	182	188	8	2	200	120.8	250	8	27	M24	160.5	9.5	160.5	7		16.97
150	165.2	167.0	355	44	64	200	208	8	2	240	143.2	295	12	33	M30	188.0	11	188.0	7		22.6
200	216.3	218.2	405	50	72	255	263	8	2	290	190.9	345	12	33	M30	243.0	13	243.0	7		34.9
250	267.4	269.5	475	56	80	310	318	10	2	355	237.2	410	12	33	M30	298.0	15	298.0	7		41.1

Remarks :

1. As far as possible, nominal diameter in parenthesis should be avoid from use.
2. The dimensional tolerance shall comfirm to JIS B2203.
3. The flange gasket surface is based on large raised facing specified in JIS B2202. But, if necessary, facings other than the large raised facing specified in JIS B2201 can be designated by customers.
4. Size d is an example of pipe thickness for schedule 40 of JIS G3454 and JIS G3456. When other size is necessary, customer can order it at will.
5. Refer to JIS B2216.

210kgf/cm² (JIS B2291 SQUARE FLANGES)

FLANGE FOR OIL PRESSURE

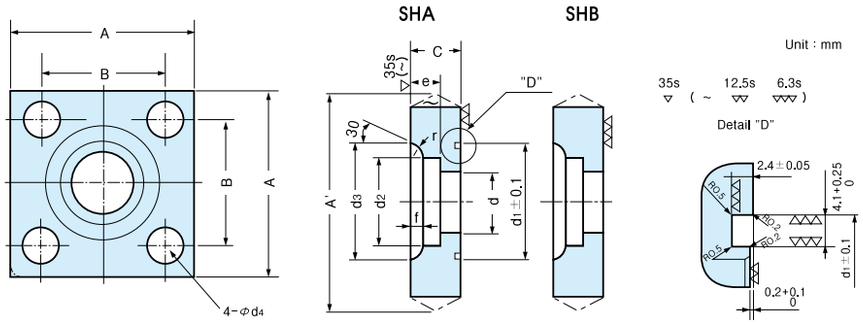

Nominal Bore	A		A' (MAX)	B		C		d	d1		d2		e	d3	d4	f	r	Weight (kg)	G계열 O링
15	63	±1	67	40	±0.2	22	0 −1	16	30	±0.1	22.2	+0.2 0	11	32	11	3.5	5	0.6	G25
20	68		72	45		22		20	35		27.7		12	38	11	4.0	5	0.7	G30
25	80	±1.2	85	53		28	0 −1.5	25	40		34.5	+0.3 0	14	45	13	4.0	5	1.2	G35
32	90		95	63		28		31.5	45		43.2		16	56	13	6.0	5	1.5	G40
40	100	±1.5	106	70	±0.4	36	0 −2	37.5	55		49.1		18	63	18	7.0	5	2.4	G50
50	112		118	80		36		47.5	65		61.1		20	75	18	7.0	5	2.8	G60
65	140	±2	148	100		45		60	80		77.1	+0.4 0	22	95	22	9.5	6	5.3	G75
80	155		163	112		45		71	90		90.0		25	108	24	11.0	6	6.2	G85

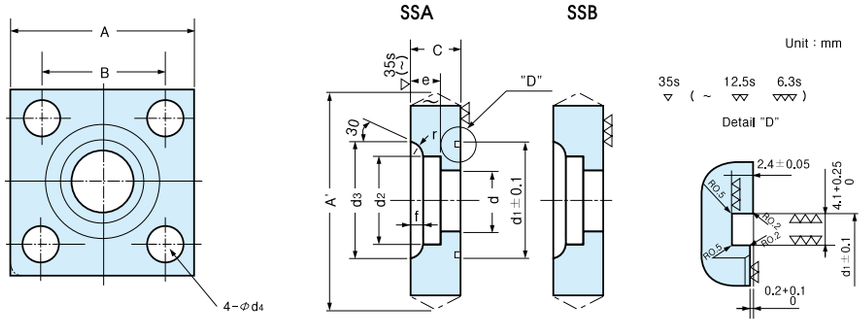

Nominal Bore	A		A' (MAX)	B		C		d	d1		d2		e	d3	d4	f	r	Weight (kg)
15	54	±1	58	36	±0.2	22	0 −1	16	30	±0.1	22.2	+0.2 0	11	32	11	3.5	5	0.5
20	58		62	40		22		20	35		27.7		12	38	11	4.0	5	0.6
25	68	±1.2	73	48		28	0 −1.5	25	40		34.5	+0.3 0	14	45	13	4.0	5	0.8
32	76		81	56		28		31.5	45		43.2		16	56	13	6.0	5	1.0
40	92	±1.5	98	65	±0.4	36	0 −2	37.5	55		49.1		18	63	18	7.0	5	1.9
50	100		106	73		36		47.5	65		61.1		20	75	18	7.0	5	2.0
65	128	±2	136	92		45		60	80		77.1	+0.4 0	22	95	22	9.5	6	4.1
80	140		148	103		45		71	90		90.0		25	108	24	11.0	6	4.7

280kgf/cm² (JIS F7806 SQUARE FLANGES)

FLANGE FOR OIL PRESSURE

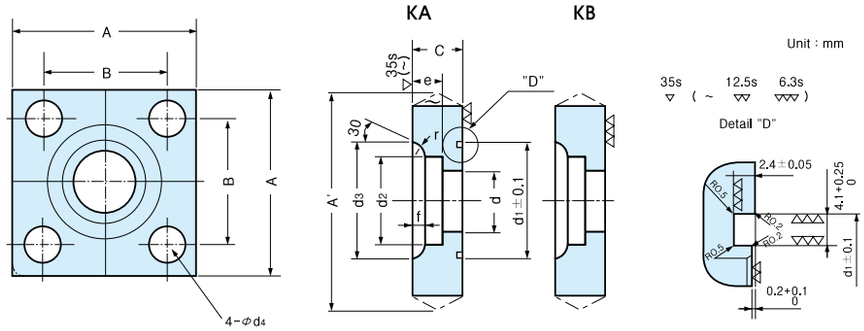

Nominal Bore	A		A' (MAX)	B		C		d	d1		d2		e	d3	d4	f	r	Weight (kg)
15	66	±1	70	43	±0.2	22	0 −1	12.3	24	±0.1	22.2	+0.2 0	12	34	11	4.0	5	0.63
20	72		76	48		25		16.2	30		27.7		12	40	11	4.5	5	0.85
25	85	±1.2	91	58		35	0 −1.5	21.2	35		34.5	+0.3 0	14	48	13.5	5.0	5	1.64
32	98		104	68		35		29.9	45		43.2		18	60	17.5	6.5	5	2.03
40	105	±1.5	112	74	±0.4	40	0 −2	34.4	50		49.1		20	66	17.5	7.5	5	2.66
50	130		139	90		50		43.1	60		61.1		20	79	22	8.0	5	5.14
65	150	±2	161	108		60		57.3	75		77.1	+0.4 0	25	100	24	10.0	6	7.95
80	170		181	120		65		66.9	85		90.0		25	114	26	12.0	6	11.0

350kgf/cm² (JIS F7806 SQUARE FLANGES)

FLANGE FOR OIL PRESSURE

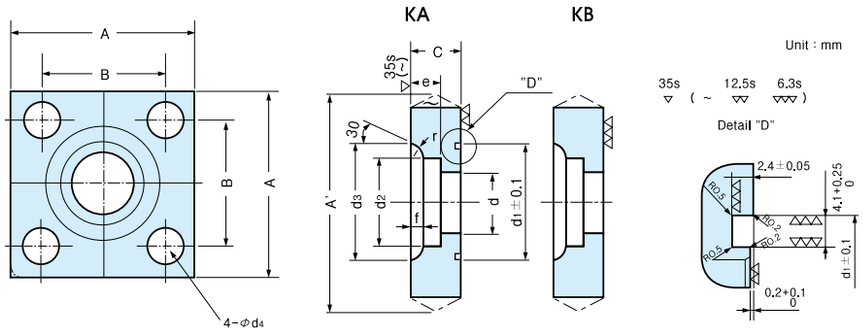

Nominal Bore	A		A' (MAX)	B		C		d	d1		d2		e	d3	d4	f	r	Weight (kg)
15	68	±1.2	73	45	±0.2	28	0 −1.5	12.3	24	±0.1	22.2	+0.2 0	12	37.5	11	4	5	0.88
20	82		87	55		30		16.2	30		27.7		12	43.5	13.5	5	5	1.34
25	95	±1.5	101	65		35		21.2	35		34.5	+0.3 0	14	53	17.5	5.5	6	2.02
32	100		106	70		35		23.3	40		43.2		18	63	17.5	7	6	2.16
40	105		112	75	±0.4	42	0 −2	28.2	45		49.1		20	70	17.5	8	6	2.84
50	132	±2	140	92		50		38.3	55		61.1		25	84	22	9	6	5.30
65	160		170	112		60		48.3	65		77.1	+0.4 0	30	105	26	12	7	9.92
80	190		202	130		68		58.7	75		90.0		30	120	33	13.5	7	14.8

TOLERANCE FOR PIPE FLANGES

KS B1502 / JIS B2220

SOLID

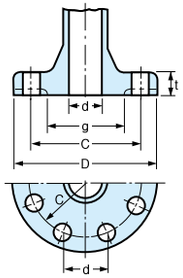

SLIP-ON

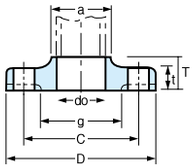

WELDING NECK

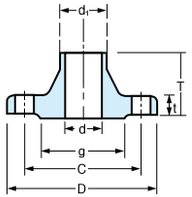

TYPE OF GASKET SURFACE

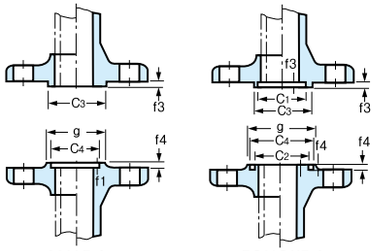

MALE & FEMALE TYPE

TONGUE & GROOVE TYPE

Unit : mm

Flange Section		Surface Condition	Basic Size	Dimensional Tolerance
Outside Dia. D		Finish	600 or less	±1.5
			over 600	±3
Inside Dia.	Slip-on Flange do	Finish	100 & below	+0.5 / 0
			over 100 thru 400	+1 / 0
			over 400 thru 600	+1.5 / 0
			over 600 thru 800	+2 / 0
			over 800 thru 1000	+2.5 / 0
			over 1000	+3 / 0
	Welding Neck Flange d		100 & below	0 / −0.5
			over 100 thru 400	0 / −1
			over 400 thru 600	0 / −1.5
			over 600 thru 800	0 / −2
			over 800 thru 1000	0 / −2.5
			over 1000	0 / −3
Bolt Hole	Bolt Circle Dia. C		950 or less	±0.8
			over 950	±1.5

Flange Section		Surface Condition	Basic Size	Dimensional Tolerance
Bolt Hole	Pitch of Hole	Drilling Hole	-	±0.8
Dia of Hub	Slip-on Flange (a) Welding Neck Flange (d1)	Finish	220 or less	+2 / 0
			over 220 thru 650	+4 / 0
			over 650	+8 / 0
Gasket Seat	C1, C2 C3, C4	Finish	500 & below	±0.3
			over 500 thru 1000	±0.35
			over 1000 thru 1500	±0.4
			over 1500	±0.5
	f4 f3	Finish		±0.2
	g	Finish	700 or less	±0.8
			over 700	±1.5
Thickness t		One-side Finish	20 & below	+1.5 / 0
			over 20 thru 50	+2 / 0
			over 50	+3 / 0
		Both-side Finish	20 & below	+1 / 0
			over 20 thru 50	+1.5 / 0
			over 50	+2 / 0
Hub Height T	SOH,SW,LJ,TR	–		±2
	WN	–	200 or less	+2 / 0
		–	over 200	+3 / 0

Notes:

(1) This dimensional tolerance applies to the machined surface, as required.

(2) This dimension d has been specified only for the flange, of which the bore part is cylindrical in shape.

Remarks :

(1) The dimensions d of bore part of the solid flanges with surface, as forged of valves, pumps, etc. are allowed up to plus 100% of the above dimensional tolerance. Provided that the required thickness shall be free from its influence.

(2) The thickness of flange of valve and the like, of which the dimension between flange faces is limited to a fixed value, are allowed up to plus 100% of the above dimensional tolerance in the column of thickness.

(3) In the case of spot facing of the single surface finishing, the thickness of spot facing is allowed up to 70% of the dimensional tolerance in the above column of thickness in negative side.

(4) The chain double-dashed lines in the figures of solid flange and socket welding type flange illustrate the cases of large raised face flange.

STANDARD MARKING

CLASS | SCHEDULE | MATERIAL | LOT NO.

150# 2" S/40 B16 A105 SB60645-5802A

DAE-HEUNG LOGO | NOMINAL PIPE SIZE | SPEC | HEAT NO.

MEMO

DAEHEUNG

MEMO

DAEHEUNG

DAE HEUNG IND. CO., LTD.

MEMO

DAEHEUNG

MEMO

DAEHEUNG

DAE HEUNG IND. CO., LTD.

COMPARISION FLANGE BORES OF WELDING NECK FLANGE FOR ANSI WITH JIS

NOMINAL PIPE SIZE	O.D		SCH10		SCH20		SCH30		STD	SCH40		SCH60		XS	SCH80		SCH100		SCH120		SCH140		SCH160		XXS
	JIS	ANSI	JIS	ANSI	JIS	ANSI	JIS	ANSI	ANSI	JIS	ANSI	JIS	ANSI	ANSI	JIS	ANSI	JIS	ANSI	JIS	ANSI	JIS	ANSI	JIS	ANSI	ANSI
1/2″	21.7	21.34	–	–	–	–	–	–	15.798	16.1	15.798	15.3	–	13.87	14.3	13.87	–	–	–	–	–	–	12.3	11.79	6.4
3/4″	27.2	26.67	–	–	–	–	–	–	20.929	21.4	20.929	20.4	–	18.85	19.4	18.85	–	–	–	–	–	–	16.2	15.54	11.02
1″	34.0	33.40	–	–	–	–	–	–	26.65	27.2	26.65	26.2	–	24.31	25.0	24.31	–	–	–	–	–	–	21.2	20.70	15.21
1 1/4″	42.7	42.16	–	–	–	–	–	–	35.05	35.5	35.05	33.7	–	32.46	32.9	32.46	–	–	–	–	–	–	29.9	29.46	22.76
1 1/2″	48.6	48.26	–	–	–	–	–	–	40.89	41.2	40.89	39.6	–	38.10	38.4	38.10	–	–	–	–	–	–	34.4	33.99	27.94
2″	60.5	60.33	–	–	54.1	–	–	–	52.5	52.7	52.50	50.7	–	49.25	49.5	49.25	–	–	–	–	–	–	43.1	42.85	38.18
2 1/2″	76.3	73.03	–	–	67.3	–	–	–	62.71	65.9	62.71	64.3	–	59.00	62.3	59.00	–	–	–	–	–	–	57.3	53.98	44.98
3″	89.1	88.90	–	–	80.1	–	–	–	77.93	78.1	77.93	75.9	–	73.66	73.9	73.66	–	–	–	–	–	–	66.9	66.65	58.42
3 1/2″	101.6	101.60	–	–	92.6	–	–	–	90.12	90.2	90.12	87.6	–	85.45	85.4	85.45	–	–	–	–	–	–	76.2	–	–
4″	114.3	114.30	–	–	104.5	–	–	–	102.26	102.3	102.26	100.1	–	97.18	97.1	97.18	–	–	92.1	92.05	–	–	87.3	87.33	80.10
5″	139.8	141.30	–	–	129.6	–	–	–	128.19	126.6	128.19	123.6	–	122.25	120.8	122.25	–	–	114.4	115.90	–	–	108.0	109.55	103.20
6″	165.2	168.28	–	–	154.2	–	–	–	154.1	151	154.1	146.6	–	146.33	143.2	146.33	–	–	136.6	139.73	–	–	128.8	131.7	124.38
8″	216.3	219.08	–	–	203.5	206.38	202.3	205.0	202.72	199.9	202.72	195.7	198.45	193.68	190.9	193.68	186.1	188.95	179.9	182.5	175.1	177.83	170.3	173.05	174.63
10″	267.4	273.05	–	–	254.5	260.35	251.7	257.45	254.51	248.7	254.51	242.0	247.65	247.65	237.2	242.93	230.9	236.58	224.5	230.23	216.6	222.25	210.2	215.90	–
12″	318.5	323.85	–	–	305.7	311.15	301.7	307.09	304.8	297.9	303.2	289.9	295.30	298.45	283.7	288.95	275.7	281.03	267.7	273.05	261.3	266.7	251.9	257.20	–
14″	355.6	355.60	342.8	342.9	339.8	339.80	336.6	336.6	336.6	333	333.35	325.4	325.48	330.2	317.6	317.50	308.0	308.0	300.0	300.08	292.0	292.1	284.2	284.18	–
16″	406.4	406.40	393.6	393.7	390.6	390.6	387.4	387.35	387.35	381.0	381.0	373.4	373.07	381.0	363.6	363.58	353.0	354.03	344.6	344.53	333.4	333.35	325.4	325.48	–
18″	457.2	457.20	444.4	444.3	441.4	441.2	435.0	434.7	437.9	428.6	428.5	419.2	418.9	431.6	409.6	409.3	398.4	398.3	387.4	387.1	377.8	377.7	366.8	366.5	–
20″	508.0	508.0	495.2	495.3	489.0	488.9	482.6	482.60	488.95	477.8	477.88	466.8	466.75	482.6	455.6	455.63	443.0	442.93	431.8	431.80	419.2	419.10	408.0	408.03	–
24″	–	609.6	–	–	–	590.9	–	581.5	590.9		575.0	–	560.8	584.6		548.1	–	532.2	–	518.0	–	505.3	–	490.9	–
30″	–	762.0	–	–	–	736.6	–	730.25	742.95	–	–	–	–	736.6	–	–	–	–	–	–	–	–	–	–	–

NOMINAL WALL THICKNESS

NPS		OUTSIDER DIAMTER		NOMINAL WALL THICKNESS																		
INCH	mm	KS(JIS)	ANSI	SPP (SGP)	S5S/S5	S10S	S10	S20	S30	S40S	STD	S40	S60	S80S	XS	S80	S100	S120	S140	S160	XXS
1/8″	6	10.5	10.3			1.24	1.24		1.45	1.73	1.73	1.73		2.41	2.41	2.41					
1/4″	8	13.8	13.7			1.65	1.65		1.85	2.24	2.24	2.24		3.02	3.02	3.02					
3/8″	10	17.3	17.2			1.65	1.65		1.85	2.31	2.31	2.31		3.20	3.20	3.20					
1/2″	15	21.7	21.3	2.80	1.65	2.11	2.11		2.41	2.77	2.77	2.77		3.73	3.73	3.73				4.78	7.47
3/4″	20	27.2	26.7	2.80	1.65	2.11	2.11		2.41	2.87	2.87	2.87		3.91	3.91	3.91				5.56	7.82
1″	25	34.0	33.4	3.20	1.65	2.77	2.77		2.90	3.38	3.38	3.38		4.55	4.55	4.55				6.35	9.09
1 1/4″	32	42.7	42.2	3.50	1.65	2.77	2.77		2.97	3.56	3.56	3.56		4.85	4.85	4.85				6.35	9.70
1 1/2″	40	48.6	48.3	3.50	1.65	2.77	2.77		3.18	3.68	3.68	3.68		5.08	5.08	5.08				7.14	10.16
2″	50	60.5	60.3	3.80	1.65	2.77	2.77		3.18	3.91	3.91	3.91		5.54	5.54	5.54				8.74	11.07
2 1/2″	65	76.3	73.0	4.20	2.11	3.05	3.05		4.78	5.16	5.16	5.16		7.01	7.01	7.01				9.53	14.02
3″	80	89.1	88.9	4.20	2.11	3.05	3.05		4.78	5.49	5.49	5.49		7.62	7.62	7.62				11.13	15.24
3 1/2″	90	101.6	101.6	4.20	2.11	3.05	3.05		4.78	5.74	5.74	5.74		8.08	8.08	8.08					
4″	100	114.3	114.3	4.50	2.11	3.05	3.05		4.78	6.02	6.02	6.02		8.56	8.56	8.56		11.13		13.49	17.12
5″	125	139.8	141.3	4.50	2.77	3.40	3.40			6.55	6.55	6.55		9.53	9.53	9.53		12.70		15.88	19.05
6″	150	165.2	168.3	5.00	2.77	3.40	3.40			7.11	7.11	7.11		10.97	10.97	10.97		14.27		18.26	21.95
8″	200	216.3	219.1	5.80	2.77	3.76	3.76	6.35	7.04	8.18	8.18	8.18	10.31	12.70	12.70	12.70	15.09	18.26	20.62	23.01	22.23
10″	250	267.4	273.1	6.50	3.40	4.19	4.19	6.35	7.80	9.27	9.27	9.27	12.70	12.70	12.70	15.09	18.26	21.44	25.40	28.58	25.40
12″	300	318.5	323.8	6.90	3.96	4.57	4.57	6.35	8.38	9.53	9.53	10.31	14.27	12.70	12.70	17.48	21.44	25.40	28.58	33.32	25.40
14″	350	355.6	355.6	7.90	3.96	4.78	6.35	7.92	9.53	9.53	9.53	11.13	15.09	12.70	12.70	19.05	23.83	27.79	31.75	35.71	
16″	400	406.4	406.4	7.90	4.19	4.78	6.35	7.92	9.53	9.53	9.53	12.70	16.66	12.70	12.70	21.44	26.19	30.96	36.53	40.49	
18″	450	457.2	457.2	7.90	4.19	4.78	6.35	7.92	11.13	9.53	9.53	14.27	19.05	12.70	12.70	23.83	29.36	34.93	39.67	45.24	
20″	500	508.0	508.0	7.90	4.78	5.54	6.35	9.53	12.70	9.53	9.53	15.09	20.62	12.70	12.70	26.19	32.54	38.10	44.45	50.01	
22″	550	558.8	558.8		4.78	5.54	6.35	9.53	12.70		9.53		22.23		12.70	28.58	34.93	41.28	47.63	53.98	
24″	600	609.6	609.6		5.54	6.35	6.35	9.53	14.27	9.53	9.53	17.48	24.61	12.70	12.70	30.96	38.89	46.02	52.37	59.54	
26″	650	660.4	660.4				7.92	12.70			9.53				12.70						
28″	700	711.2	711.2				7.92	12.70	15.88		9.53				12.70						
30″	750	762.0	762.0		6.35	7.92	7.92	12.70	15.88		9.53				12.70						
32″	800	812.8	812.8				7.92	12.70	15.88		9.53	17.48			12.70						
34″	850	863.6	863.6				7.92	12.70	15.88		9.53	17.48			12.70						
36″	900	914.4	914.4				7.92	12.70	15.88		9.53	19.05			12.70						
38″	950	965.2	965.2								9.53				12.70						
40″	1000	1016.0	1016.0								9.53				12.70						
42″	1050	1066.8	1066.8								9.53				12.70						
44″	1100	1117.6	1117.6								9.53				12.70						
46″	1500	1168.4	1168.4								9.53				12.70						
48″	1200	1219.2	1219.2								9.53				12.70						