ISO 9001:2008
ISO 14001

TGA TRÄGERGEMEINSCHAFT FÜR AKKREDITIERUNG
GERMAN ASSOCIATION FOR ACCREDITATION GMBH

TGA-ZM-02-06-00

VACUUM COMPONENTS

www.vacsco.com

Creating Customer Value with
the Best Technology

vacsco

Vacsco is a vacuum pump leader and is creating a better future

벡스코는 진공펌프 선도기업으로 더 나은 미래를 만들어갑니다.

VACUUM PUMP

04 Oil rotary pump
16 Watering pump
18 Dry pump
27 Booster pump
30 Diffusion pump

VACUUM SYSTEM

32 Booster Pumping System
32 Reserve Tank System
33 Automatic He leak Tester System
33 High Vacuum Test & Calibration System
34 Glove Box
34 Hyper Tube System
35 Thermal Vacuum Chamber
35 Technical R&D Center
36 Exhaust Vacuum System

VACUUM ACCESSORY

38 Vacuum gauge
40 Oil mist trap
43 Component
48 Valve
51 Vacuum oil

CONTENTS

OIL ROTARY PUMP

MVP Small

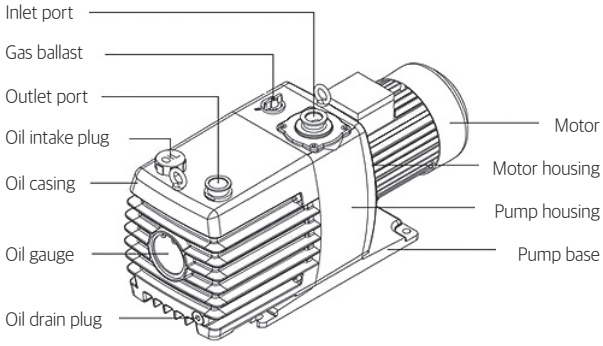

제품 특징 / Overview

- 고품질의 신소재를 사용하여 도달 압력이 우수하고 배기속도가 크다.
- 오일 역류 방지 밸브 시스템이 흡입구에 설치되어 있어, 펌프 정지 시 진공 설비의 진공 파기 및 오일 역류로 인한 오염을 막아준다.
- 흡입구와 배기구는 국제 규격에 따른 Quick Clamp를 사용한다.
- 소음과 진동이 작다.
- 강력한 압력을 가진 오일펌프가 오일 순환을 완벽하게 하여 펌프를 보호한다.
- 간단한 가스밸러스트 밸브 조작을 통해 펌프 가동 중 수분제거가 가능하다.

- High-quality new materials are used to provide excellent ultimate pressure and high pumping speed.
- Improved oil anti-suckback system is installed in inlet port, thus it prevent not only a leak of the facility but also contamination by oil backflow.
- Quick Clamp that follows international standards is used for inlet and outlet ports.
- Low level of noise and vibration.
- Oil pump with strong pressure that makes perfects oil circulation system to protects the pump.
- Gas ballast valve is easily controlled to elininate moisture for pump operation.

기술정보 / Technical Data

Description		Unit	MVP-6	MVP-12	MVP-24	MVP-36	MVP-60	MVP-90
Pumping speed	60Hz	m^3/hr	6	12	24	36	60	90
		ℓ/min	100	200	400	600	1000	1500
	50Hz	m^3/h	5	10	20	30	50	75
		ℓ/min	80	170	335	500	830	1250
Ultimate pressure	Gas ballast C	Torr	5×10^{-4}					
	Gas ballast Ⅰ		5×10^{-3}					
	Gas ballast Ⅱ		5×10^{-2}					
Water vapour tolerance		Torr	40	40	25	25	40	40
Oil filling		L	1.1	1.2	2.0	2.3	4.5	6.5
Port size	Inlet	DN	25KF				40KF	
	Outlet	DN	25KF				40KF	
Motor power		kW	0.4		0.75		1.5	2.2
Rotational speed	60Hz	R.P.M	1750					
	50Hz	R.P.M	1450					
Noise level(without gas ballast)		dB	50	50	52	52	56	56
Weight		kg	21	22.5	38	41	68	84

배기곡선 / Exhaust Curve

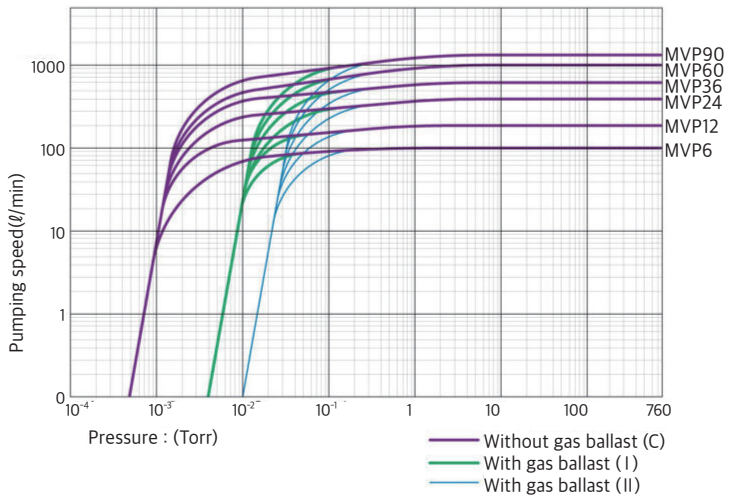

외형사이즈 / Outside Dimension

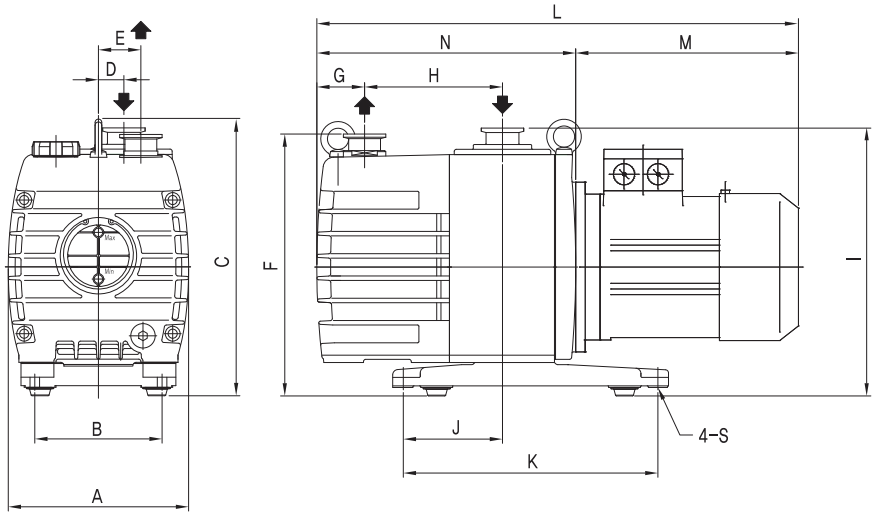

(Unit : mm)

Model	A	B	C	D	E	F	G	H	I	J	K	N	S	M	L
MVP-6	170	120	261	24	40	247	45	130	253	94	240	244	Ø9	210	454
MVP-12	170	120	261	24	40	247	45	155	253	94	240	269	Ø9	210	479
MVP-24	210	140	297	40	50	282	55	180	288	147	310	309	Ø12	234	543
MVP-36	210	140	297	40	50	282	58	210	288	147	310	342	Ø12	234	576
MVP-60	250	185	387	30	50	368	80	255	370	305	550	428	Ø14	281	709
MVP-90	280	185	441	30	50	412	85	295	415	355	600	479	Ø14	312	791

OIL ROTARY PUMP

MVP Large

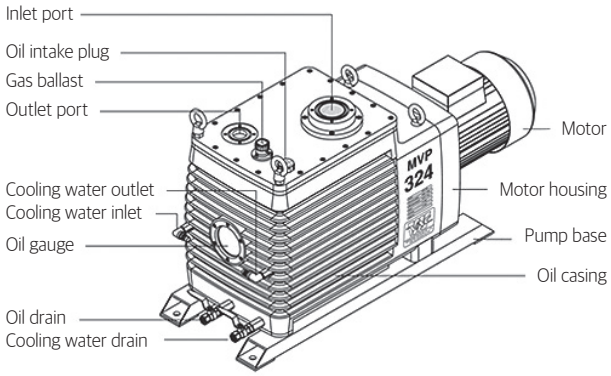

제품 특징 / Overview

- 고품질의 신소재를 사용하여 도달 압력이 우수하고 배기속도가 크다.
- 오일 역류 방지 밸브 시스템이 흡입구에 설치되어 있어, 펌프 정지 시 진공 설비의 진공 파기 및 오일 역류로 인한 오염을 막아준다.
- 흡입구와 배기구는 국제 규격에 따른 Quick Clamp를 사용한다.
- 소음과 진동이 작다.
- 강력한 오일 압력을 가진 오일펌프가 오일 순환을 완벽하게 하여 펌프를 보호한다.
- 간단한 가스밸러스트 밸브 조작을 통해 펌프 가동 중 수분제거가 가능하다.
- 유지보수 및 수리가 용이하다.
- 공랭식과 수랭식(적용모델 : MVP-324) 모두 사용할 수 있는 구조로 냉각 효과가 좋다.

- High-quality new materials provide excellent ultimate pressure and high pumping speed.
- Improved oil anti-suckback system is installed in inlet port, thus it prevent not only a leak of the facility but also contamination by oil backflow.
- An international standard-following Quick Clamp is used for inlet and exhaust ports.
- Low levels of noise and vibration.
- An oil pump with strong oil pressure that makes perfects oil circulation system to protect the pump.
- Gas ballast valve is easily controlled to elininate moisture for pump operation.
- Maintenance and repair are easy.
- High cooling effect as air cooling and water cooling(applied model: MVP-324) methods can both be used.

기술정보 / Technical Data

Description		Unit	MVP-144	MVP-216	MVP-324
Pumping speed	60Hz	m^3/hr	144	216	324
		ℓ/min	2400	3600	5400
	50Hz	m^3/hr	120	180	270
		ℓ/min	2000	3000	4500
Ultimate pressure	Gas ballast I	Torr	5×10^{-3}		
	Gas ballast C		5×10^{-4}		
Port size	Inlet	mm	ISO 63		
	Outlet	mm	ISO 40		
Motor Power		kW	3.7	5.5	7.5
Rotational speed	60Hz	R.P.M	1750		
	50Hz		1450		
Oil Filling		L	11	16	17
Cooling water (less than 20℃)		ℓ/min	N/A	N/A	6
Weight		kg	172	290	358

배기곡선 / Exhaust Curve

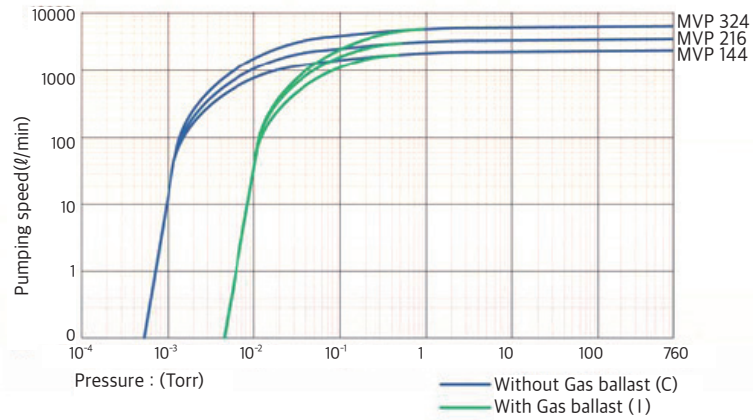

외형사이즈 / Outside Dimension

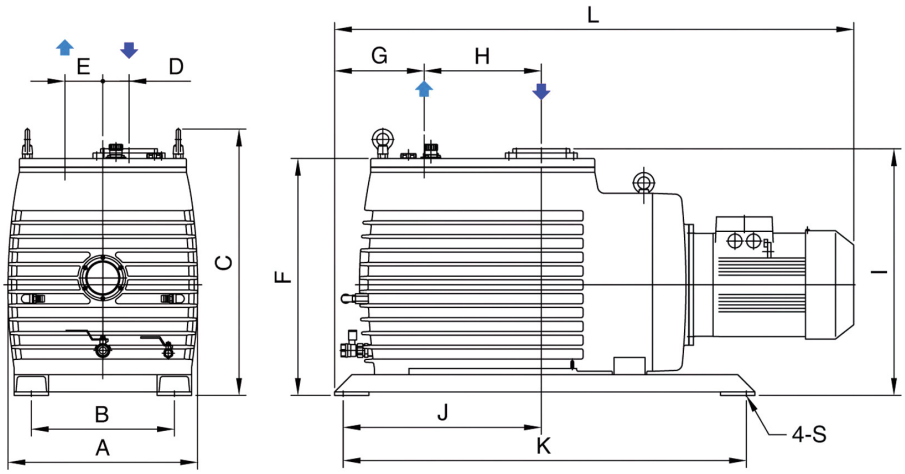

(Unit : mm)

Model	A	B	C	D	E	F	G	H	I	J	K	S	L
MVP-144	320	230	501	40	65	414	193	175	465	348	740	Ø14	974
MVP-216	400	305	575	58	75	490	195	203	528	378	805	Ø18	1101
MVP-324	400	305	645	58	75	560	203	240	598	423	895	Ø18	1179

Dimensions of flange

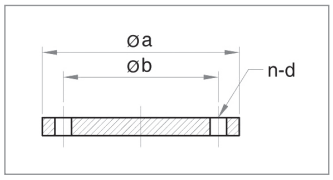

(Unit : mm)

Standard	a	b	n	d
ISO 40	100	80	4	M8
ISO 63	130	110	4	M8

OIL ROTARY PUMP

WSVP

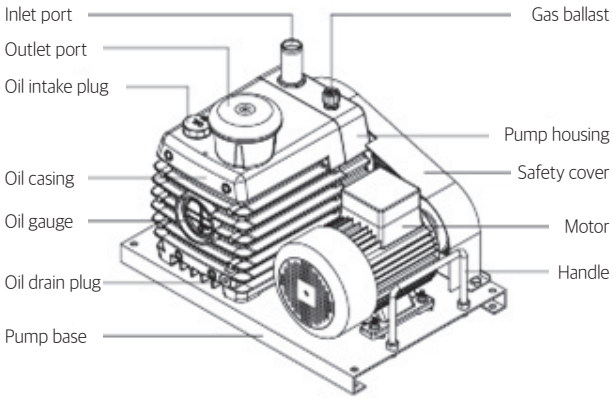

제품 특징 / Overview

- 우수한 진공도 및 배기속도가 크다.
- 간단한 가스 밸러스트 밸브 조정이 가능하다.
- 콤팩트한 설계를 갖고 있다.
- 소음 및 진동이 작다.
- 유지 보수 및 수리가 용이하다.
- 오일미스트 트랩(선택사항) 사용 시 오일 소모 및 환경오염이 방지된다.

- Excellent vacuum and high pumping speed.
- Easy adjustment of gas ballast valve.
- Compact design.
- Low levels of noise and vibration.
- It is easy to maintain and repair.
- Oil mist trap(optional) prevents oil consumption and the pollution of workplace environment.

기술정보 / Technical Data

Description		Unit	WSVP-2120	WSVP-2130	WSVP-2150
Pumping speed		m^3/hr	12	18	30
		ℓ/min	200	300	500
Ultimate pressure	Gas ballast I	Torr	5×10^{-2}		
	Gas ballast C		5×10^{-4}		
Port size	Inlet	mm	Ø32	Ø32	Ø46
	Outlet	mm	M35×1.5	M35×1.5	M50×1.5
Motor Power		kW	0.4	0.75	0.75
Rotational speed		R.P.M	900	900	900
Oil Filling		L	1.8	2.0	4.5
V-Belt		Size/Q'ty	A34″ / 1	A34″ / 1	A41″ / 2
Weight(With motor)		kg	23(37)	26(43)	46(71)

배기곡선 / Exhaust Curve

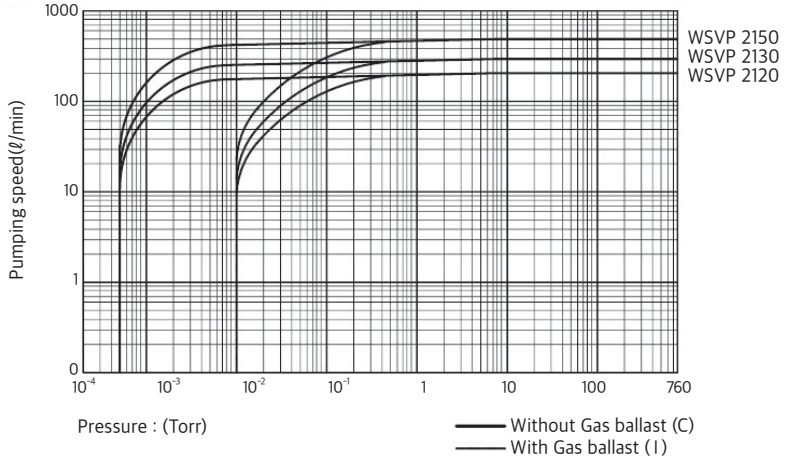

외형사이즈 / Outside Dimension

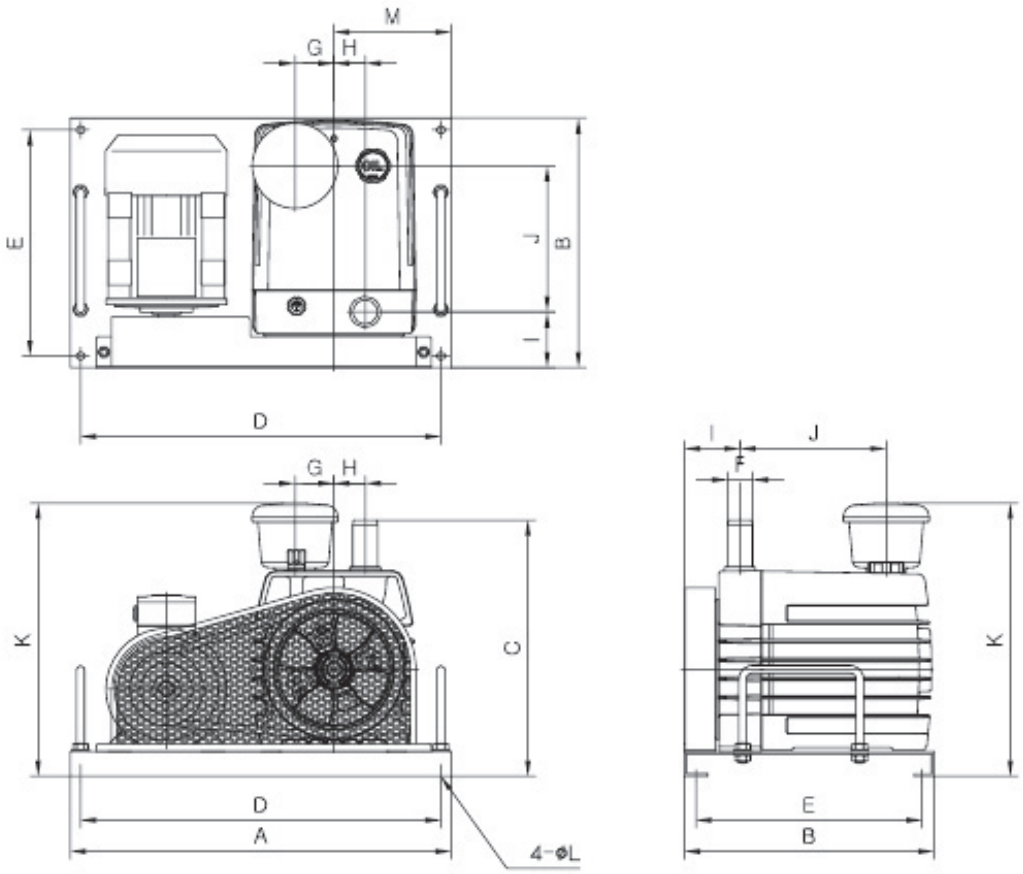

(Unit : mm)

Model	A	B	C	D	E	F	G	H	I	J	K	L	M
WSVP-2120	488	285	329	462	255	Ø32	50	40	71.5	157.5	350	Ø11	150
WSVP-2130	488	320	329	462	290	Ø32	50	40	71.5	187.5	385	Ø11	150
WSVP-2150	580	395	417	550	365	Ø46	50	40	79.5	230	454	Ø11	190

OIL ROTARY PUMP

WSSR-V

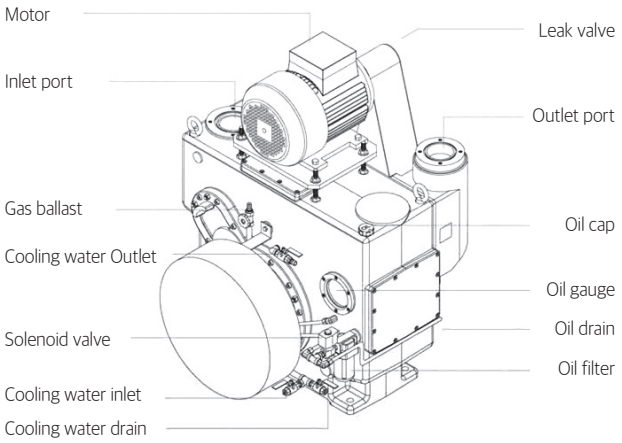

제품 특징 / Overview

- 우수한 진공도 및 배기속도가 크다.
- 간단한 가스 밸러스트 밸브 조정으로 응축성 가스의 작업공정에 용이하다.
- 콤팩트한 설계를 갖추고 있다.
- 공랭식(적용모델 WSSR-V1.5K)과 수랭식 냉각방법 적용으로 안정적인 연속운전이 가능하다.
- 소음 및 진동이 작다.
- 흡입구, 배기구 진공용 플랜지(KSB-1540) 규격이 적용되어 있다.
- 간단한 유지보수 및 펌프 수리가 용이하다.

- Excellent vacuum level and high pumping speed.
- Simple gas ballast valve adjustment facilitates the work process of compressed gases.
- Compact design.
- A stable, continuous operation is possible by applying air cooling (applied on model WSSR-V1.5K) and water cooling method.
- Low levels of noise and vibration.
- Standard-following vacuum flanges (KSB-1540) for inlet ports and outlet ports .
- Simple maintenance and easy repair of pump.

기술정보 / Technical Data

Description		Unit	WSSR-V0.7K	WSSR-V1.0K	WSSR-V1.5K	WSSR-V2.5K	WSSR-V4.8K	WSSR-V7.5K
Pumping speed		ℓ/min	750	1000	1500	2500	4800	7500
Ultimate pressure		Torr	5×10^{-3}	5×10^{-3}	5×10^{-3}	5×10^{-3}	5×10^{-3}	5×10^{-3}
		Pa	7×10^{-1}	7×10^{-1}	7×10^{-1}	7×10^{-1}	7×10^{-1}	7×10^{-1}
Port size	Inlet	mm	VG50	VG50	VG50	VG80	VG80	VG100
	Outlet	mm	N/A	N/A	VG50	VG50	VG65	VG100
Motor power		kW	1.5	2.2	2.2	3.7	7.5	11
Rotational speed		R.P.M	420	420	410	410	410	380
Oil filling		L	6	8	5	8	17	29
V-Belt		Size / Q'ty	N/A	N/A	3V-590 / 3	3V-640 / 3	3V-810 / 4	3V-970 / 5
Cooling water		L	N/A	N/A	N/A	5	5	7
Weight		kg	89	160	236	324	555	791

배기곡선 / Exhaust Curve

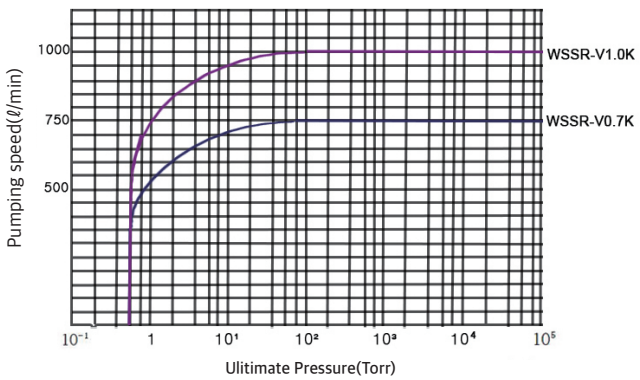

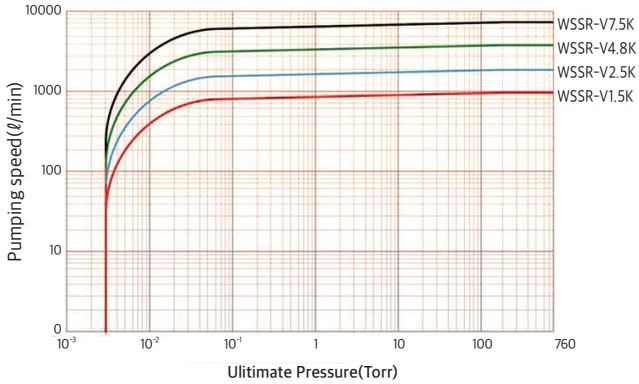

외형사이즈 / Outside Dimension

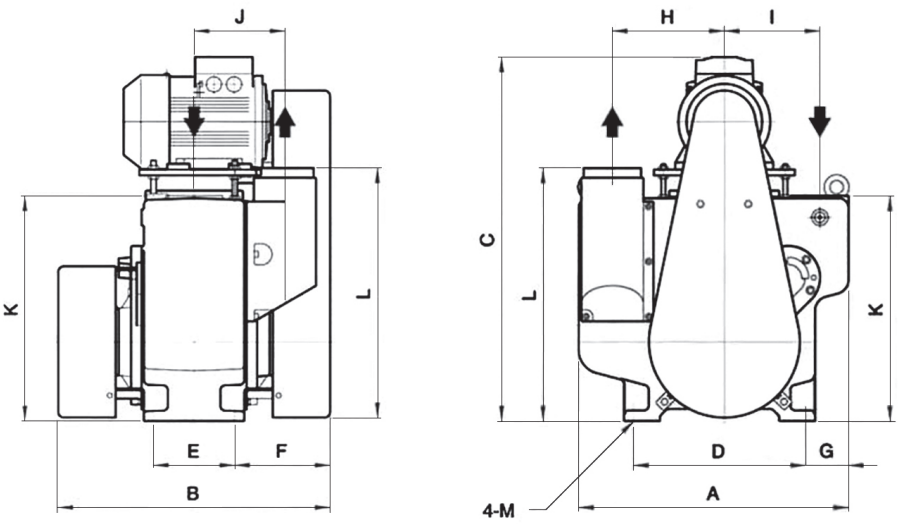

(Unit : mm)

Model	A	B	C	D	E	F	G	H	I	J	K	L	M
WSSR-V1.5K	560	575	760	360	170	206	90	235	200	190	470	530	Ø14
WSSR-V2.5K	670	605	815	450	180	216	95	276.5	220	205	515	569	Ø20
WSSR-V4.8K	805	740	1035	580	230	260	105	326	290	250	675	750	Ø20
WSSR-V7.5K	900	826	1190	670	280	279	125	364	317.5	300	765	857	Ø20

dimension of flange

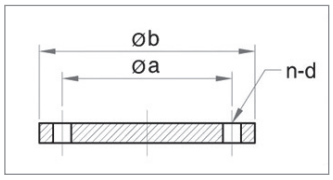

(Unit : mm)

Standard	a	b	n	d
VG50	100	120	4	M8
VG65	120	145	4	M10
VG80	135	160	4	M10
VG100	160	185	8	M10

OIL ROTARY PUMP

WST

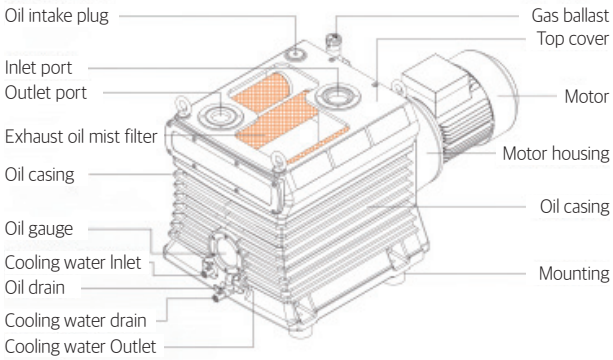

제품 특징 / Overview

- 최저 펌프 온도를 유지하는 구조로 열악한 작업공정에 이상적이고 안정된 펌프성능 유지가 가능하다.
- 진공도 및 배기속도가 우수하다.
- 역류 방지 밸브 시스템이 펌프 정지 시 오일 및 오일 증기가 진공 설비로의 역류 방지가 가능하다.
- 국제 규격에 따른 흡배기구를 사용 (ISO Flange) 하고 있다.
- 정압 오일 순환 시스템은 저진공 작업에 연속 사용이 가능하고 펌프 보호가 가능하다.
- 오일 미스트트랩은 오일 소모를 줄이고 작업장의 환경오염을 방지해준다.
- 유지보수 및 수리가 용이하다.
- 저진공에 사용되며 소음이 적다.

- Designed as a model with a structure that maintains the minimum pump temperature, it enables the maintenance of an ideal and stable pump performance in harsh processes.
- Vacuum level and pumping speed are excellent.
- Improved oil anti-suckback system prevents backflow of oil and oil vapor to the vacuum facility.
- ISO Flange, which follows international standards, is used.
- The static pressure oil circulation system can be used continuously for low vacuum operations and can protect pumps.
- Oil mist trap reduces oil consumption and prevents the pollution of workplace environment.
- It is easy to maintain and repair.
- It is used for low vacuum and has a low noise level.

기술정보 / Technical Data

Description		Unit	WST-180B	WST-240	WST-324B
Pumping speed	60Hz	m^3/hr	180	240	324
		ℓ/min	3000	4000	5400
	50Hz	m^3/hr	150	192	270
		ℓ/min	2500	3200	4500
Ultimate Pressure	Gas ballast I	Torr	5×10^{-3}	5×10^{-3}	5×10^{-3}
	Gas ballast C		5×10^{-4}	5×10^{-4}	5×10^{-4}
Port size	Inlet	mm	ISO 63	ISO 63	ISO 63
	Outlet	mm	ISO 63	ISO 63	ISO 63
Motor Power (50Hz / 60Hz)		kW	3.7	5.5	7.5
Rotational speed	60Hz	R.P.M	1800	1800	1800
	50Hz		1500	1500	1500
Oil Filling		L	15	15	20
Weight		kg	194	231	280

배기곡선 / Exhaust Curve

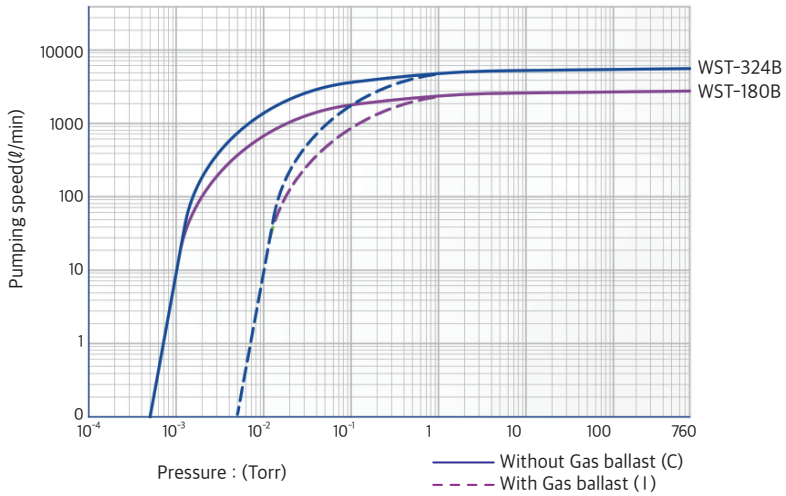

외형사이즈 / Outside Dimension

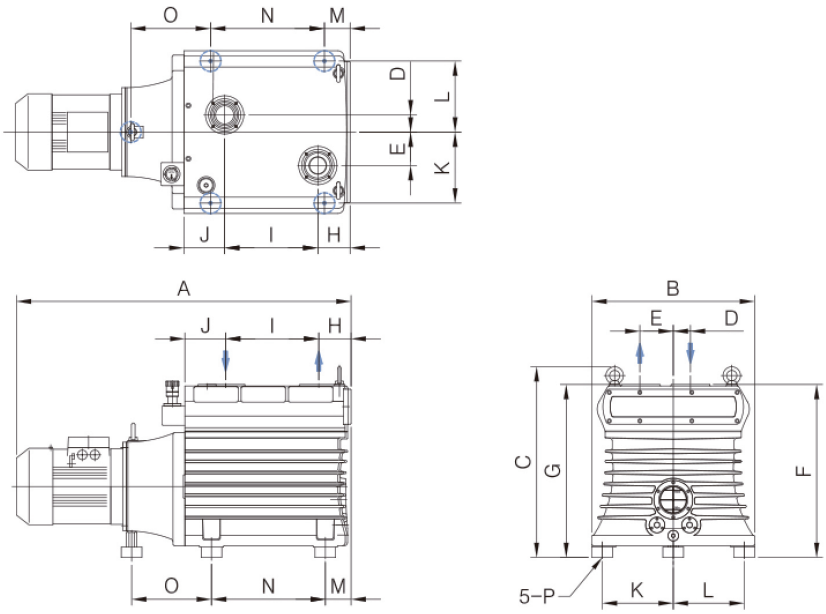

(Unit : mm)

Model	A	B	C	D	E	F	G	H	I	J	K	L	M	N	O	P
WST-180B	938	460	558	50	57.5	505	505	113	225	125	200	200	134	210	249	M10
WST-324B	1132	550	645	58	113	585	585	110	315	137.5	240	240	87	385	270	M10

Dimensions of flange

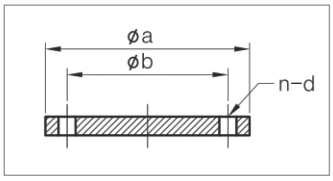

(Unit : mm)

Standard	a	b	n	d
ISO 40	100	80	4	M8
ISO 63	130	110	4	M8

OIL ROTARY PUMP

WOVP

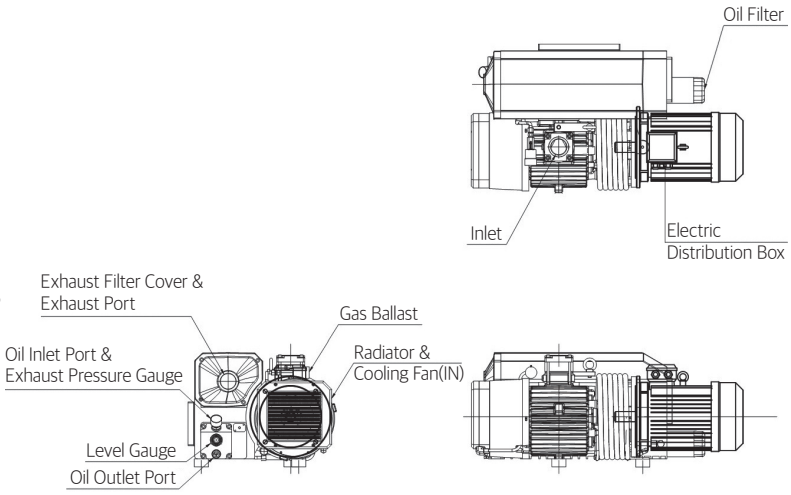

제품 특징 / Overview

- 간결한 디자인과 튼튼한 내구성을 가지고 있다.
- 쉬운 운전 및 간단한 유지관리가 가능하다.
- 간단한 설치가 가능하다.
- 냉각수가 필요 없는 공랭 방식으로 되어있다.
- 직접 구동 방식으로 운전되며 C페이스 설계되어 있다.
- 벨트가 필요하지 않으며 배기 필터가 일체형으로 설치되어 있어 99.9% 유분 제거 및 배출이 가능하다.
- 소음이 적게 설계되어 있다.

- Simple design and strong durability.
- Easy operation and simple maintenance.
- Simple installation.
- Utilizes an air cooling method that does not require cooling water.
- Operates with a direct driving method and designed as a C face.
- A belt is not required and an exhaust filter is integrally installed, enabling the removal and emission of 99.9% of oil.
- Designed to emit a lower level of noise.

기술정보 / Technical Data

Description		Unit	WOVP-0020	WOVP-0030	WOVP-0040	WOVP-0060	WOVP-0080	WOVP-0120	WOVP-0130	WOVP-0200	WOVP-0320	WOVP-0350	WOVP-0430	WOVP-0500	WOVP-0505	WOVP-0600	WOVP-0605	WOVP-0800	WOVP-1000	WOVP-1200	WOVP-1500
Pumping speed	60Hz	m^3/hr	12	18	24	36	48	75	78	120	192	210	258	300	300	360	340	505	600	780	NA
	50Hz		10	15	20	30	40	63	65	100	160	175	215	250	250	300	280	420	500	660	750
Ultimate pressure	H Type	mbar	2	2	2	0.1	0.1	0.1	0.1	0.1	0.1	0.1	0.1	0.1	0.1	0.1	0.08	0.1	0.1	0.1	0.1
	NM Type		2	2	2	NA	NA	NA	NA	NA	NA	NA	NA	NA	NA	NA	NA	NA	NA	NA	NA
	L Type		20	20	20	20	20	20	20	20	20	20	20	20	20	20	20	10	10	10	10
Motor power(3P)	60Hz	IEC(kW)	0.4	0.75	0.9	1.1	1.5	2.2	2.2	3	3.7	5.5	5.5	7.5	7.5	9.2	5.5	15	15	18.5	NA
	50Hz		0.4	0.55	0.75	0.9	1.1	1.5	1.5	2.2	3.7	5.5	5.5	5.5	5.5	7.5	7.5	11.25	11.25	15	18.5
	60Hz	NEMA(Hp)	N/A	N/A	N/A	2	2	3	3	5	5	7.5	7.5	10	10	11.5	10	15	20	25	NA
Motor power(1P)	50/60Hz	IEC(kW)	0.4	0.75	0.9	1.5	1.5	N/A	N/A	N/A	N/A	N/A	N/A	N/A	N/A	N/A	N/A	N/A	N/A	N/A	N/A
Rotational speed	60Hz	R.P.M	1740	1740	3480	1740	1740	1740	1740	1740	1740	1740	1740	1740	1740	1740	1740	1160	1160	1160	N/A
	50Hz		1450	1450	2870	1450	1450	1450	1450	1450	1450	1450	1450	1450	1450	1450	1450	980	980	980	1450
Noise level	60Hz	dB(A)	59	60	62	67	67	68	68	68	75	77	77	77	77	78	74	78	78	79	79
	50Hz		57	58	60	64	64	65	65	65	72	74	74	74	74	75	70	76	76	77	77
Ambient temperature	50/60Hz	℃	77	80	85	76/78	78/80	83/85	83/85	83/85	80/83	77/80	82/85	82/85	82/85	83/86	82/85	78/81	78/81	80/83	88
Oil filling	L		0.5	0.5	0.5	1.4	1.4	2.5	2.5	2.7	8	8	8	8	8	8	8	19	19	19	19
Port Size	Inlet	G(BSP) or NPT	1/2″	1/2″	1/2″	1-1/4″	1-1/4″	1-1/4″	1-1/4″	1-1/4″	2″	2″	2″	2″	2″	2″	2″	3″	3″	3″	3″
	Outlet		1-1/4″	1-1/4″	1-1/4″	1-1/4″	1-1/4″	1-1/4″	1-1/4″	1-1/4″	2″	2″	2″	2″	2″	2″	2″	3″	3″	3″	3″
Weight (with motor)	kg		20	22	20	47	53	64	66	75	124	164	145	184	160	188	194 /203	504 /491*	544 /531*	703 /582*	535

• *은 50Hz 모터입니다. (*stands for 50Hz motor.)

배기곡선 / Exhaust Curve

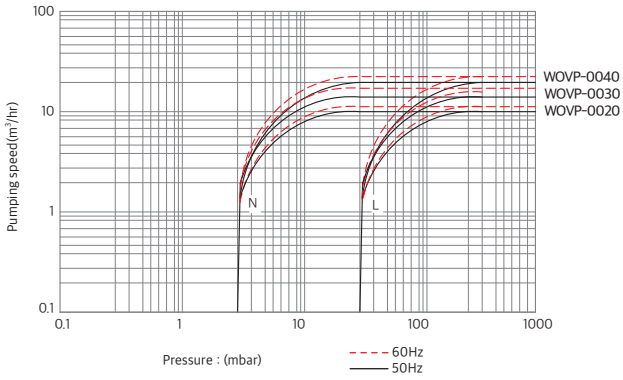

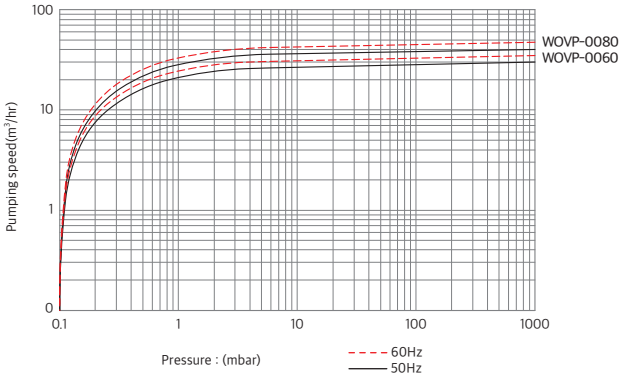

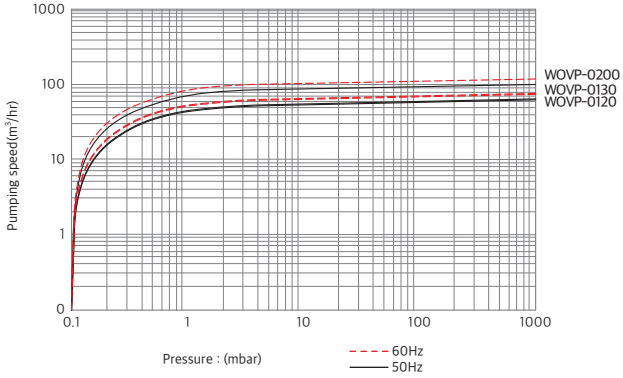

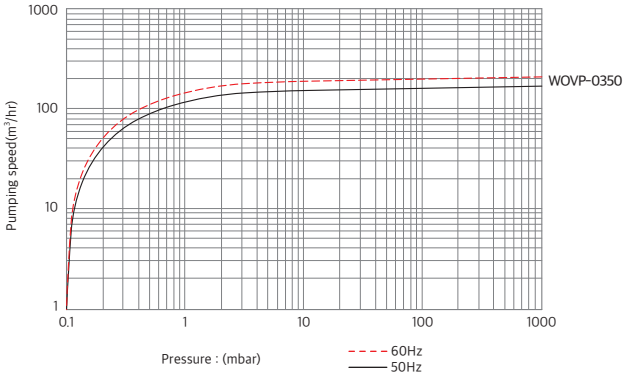

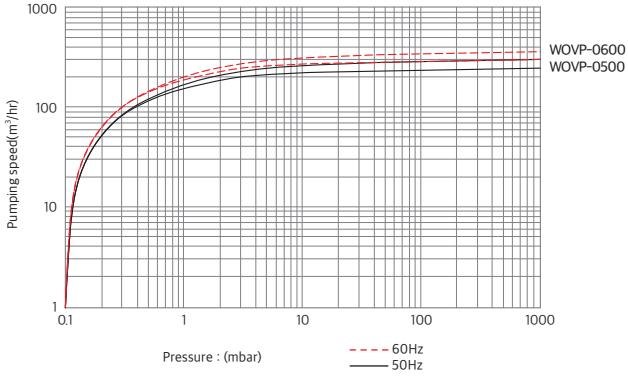

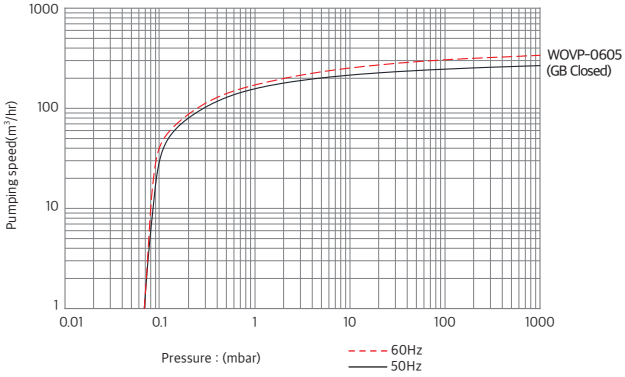

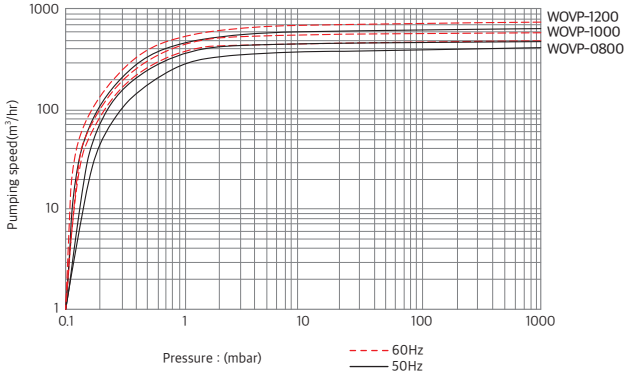

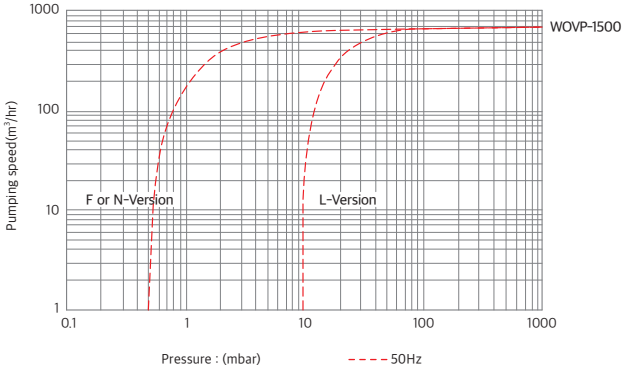

WATERING PUMP

VWVP-1

제품 특징 / Overview

- 1단식 수봉식 진공펌프(ONE STAGE WATER RING VACUUM PUMP).
- 대기압 150~250 Torr의 압력 범위에서 사용된다.
- 요구 진공도보다 요구 배기량(SUCTION VALUE)을 중요시하는 사용 조건에 적합하다.

- One stage Water Ring Vacuum Pump.
- It is used in the pressure range of 150 to 250 Torr in the atmosphere.
- It is suitable for conditions that place importance on required suction value than required vacuum.

기술정보 / Technical Data

Description		Unit	VWVP-1-100	VWVP-1-170	VWVP-1-300	VWVP-1-400	VWVP-1-500	VWVP-1-700	VWVP-1-900	VWVP-1-1100	VWVP-1-1500	VWVP-1-1800	VWVP-1-2000	VWVP-1-2500	VWVP-1-3400	VWVP-1-7000S
Pumping speed		ℓ/min	1000	1700	3000	4000	5000	7000	9000	11000	15000	18000	20000	25000	34000	70000
Ultimate pressure (at water 15℃)		Torr(Pa)	50 (6.7×10^3)	50 (6.7×10^3)	50 (6.7×10^3)	50 (6.7×10^3)	50 (6.7×10^3)	50 (6.7×10^3)	50 (6.7×10^3)	50 (6.7×10^3)	50 (6.7×10^3)	50 (6.7×10^3)	50 (6.7×10^3)	50 (6.7×10^3)	50 (6.7×10^3)	50 (6.7×10^3)
Rotational speed		R.P.M	1750	1750	1750	1750	1750	1750	1750	1750	1750	1150	1150	1150	1150	600~800
Motor power		kW	2.2(4P)	3.7(4P)	5.5(4P)	7.5(4P)	11(4P)	15(4P)	18.5(4P)	22(4P)	30(4P)	37(6P)	45(6P)	55(6P)	75(6P)	160(6P)
Water filling		ℓ/min	7	9	10	14	20	30	34	38	42	60	65	85	95	95
Port size	Inlet	mm	40A	40A	50A	50A	80A	80A	80A	125A	125A	150A	150A	200A	200A	200A
	Outlet	mm	40A	40A	50A	50A	80A	80A	80A	125A	125A	150A	150A	200A	200A	200A
Weight		kg	70	86	130	137	187	215	223	348	390	510	675	1085	1015	2000

VWVP-2

제품 특징 / Overview

- 2단식 수봉식 진공펌프(TWO STAGE WATER RING VACUUM PUMP).
- 대기압 30~150 Torr의 압력 범위에서 사용된다.

- 2 Stage Water Ring Vacuum Pump.
- It is used in the pressure range of 150 to 250 Torr in the atmosphere.

기술정보 / Technical Data

Description		Unit	VWVP-2-045	VWVP-2-085	VWVP-2-150	VWVP-2-250	VWVP-2-300	VWVP-2-400	VWVP-2-550	VWVP-2-700	VWVP-2-800	VWVP-2-1000	VWVP-2-1200	VWVP-2-1300	VWVP-2-2000	VWVP-2-2800
Pumping speed		ℓ/min	450	850	1500	2500	3000	4000	5500	7000	8000	10000	12000	13000	20000	28000
Ultimate pressure (at water 15℃)		Torr(Pa)	17 (2.3×10^3)	17 (2.3×10^3)	17 (2.3×10^3)	17 (2.3×10^3)	17 (2.3×10^3)	17 (2.3×10^3)	17 (2.3×10^3)	17 (2.3×10^3)	17 (2.3×10^3)	17 (2.3×10^3)	17 (2.3×10^3)	17 (2.3×10^3)	17 (2.3×10^3)	17 (2.3×10^3)
Rotational speed		R.P.M	3400	1750	1750	1750	1750	1750	1750	1750	1750	1750	1150	1150	1150	1150
Motor power		kW	1.5(2P)	2.2(4P)	3.7(4P)	5.5(4P)	7.5(4P)	11(4P)	15(4P)	18.5(4P)	22(4P)	30(4P)	37(6P)	45(6P)	55(6P)	75(6P)
Water filling		ℓ/min	6	7	9	10	14	20	30	34	38	42	60	65	85	95
Port size	Inlet	mm	25A	40A	40A	40A	40A	50A	50A	50A	80A	80A	80A	80A	100A	100A
	Outlet	mm	25A	40A	40A	40A	40A	50A	50A	50A	80A	80A	80A	80A	100A	100A
Weight		kg	50	87	107	132	143	195	213	255	390	570	685	720	1150	1078

VWVP-D

제품 특징 / Overview

- 직결 수봉식 진공펌프(DIRECT TYPE WATER RING VACUUM PUMP).
- 대기압에서 150~250 Torr의 압력 범위에서 사용된다.

- Direct Type Water Ring Vacuum Pump.
- It is used in the pressure range of 150 to 250 Torr in the atmosphere.

기술정보 / Technical Data

Description		Unit	VWVP-D-100	VWVP-D-170
Pumping speed		ℓ/min	1000	1700
Ultimate pressure (at water 15℃)		Torr(Pa)	$50(6.7\times10^3)$	$50(6.7\times10^3)$
Rotational speed		R.P.M	1750	1750
Motor power		kW	2.2(4P)	3.7(4P)
Water filling		ℓ/min	7	9
Port size	Inlet	mm	40A	40A
	Outlet	mm	40A	40A
Weight		kg	65	75

DRY PUMP

WVS

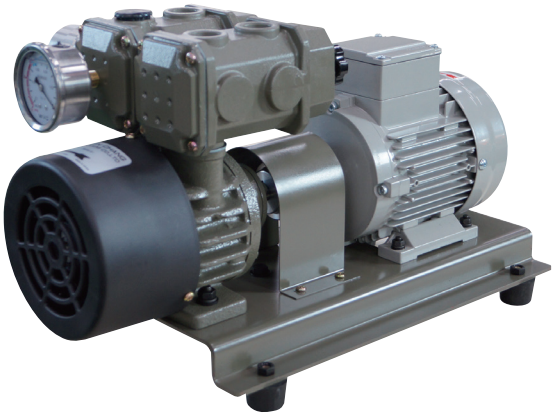

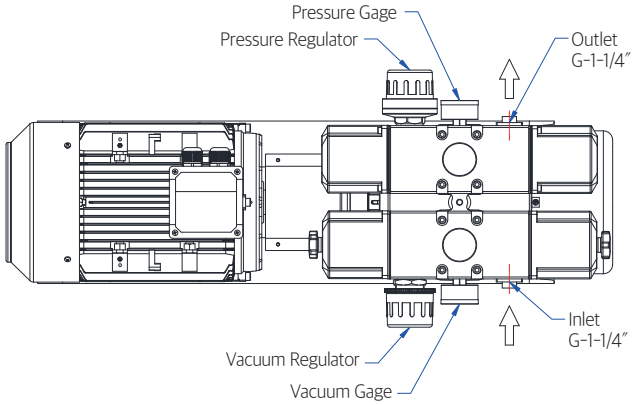

제품 특징 / Overview

- 간결한 디자인을 하고 있으며 내구성이 좋다.
- 쉬운 운전 및 유지 관리가 가능하며 설치가 간편하다.
- 오일이 없이 운전되며 공랭식으로 냉각수가 필요 없다.
- 운전 시 소음이 적다.
- 직 구동방식으로 되어있다.

- This pump is durable and has a simple design.
- Easy operation, maintenance, and installation.
- It is an air-cooled model that operates without oil and does not require cooling water.
- Operational noise is low.
- It is directly operated.

기술정보 / Technical Data

Description		Unit	WVS-3 / 3H	WVS-5 / 5H	WVS-6 / 6H	WVS-8 / 8H	WVS-9 / 9H	WVS-10 / 10H
Pumping speed	50Hz	ℓ/min	235	405	575	935	1130	2200
	60Hz	ℓ/min	280	480	685	1115	1350	2200
Ultimate pressure		mmHgG	610	650	650	650	650	670
Motor power		kW	0.4	0.75	1.5	1.5(6P)	2.2(6P)	4
Rotational speed	50Hz	R.P.M	1450	1450	1450	980	980	1100
	60Hz	R.P.M	1740	1740	1740	1160	1160	1100
Port size		G·BSP	3/4″	3/4″	3/4″	1″	1″	1-1/4″
Normal vacuuum		mmHgG	450 / 600	450 / 600	450 / 600	450 / 600	450 / 600	410 / 600
Normal pressure		Kgf/cm^2	0.6	0.6	0.6	0.6	0.6	0.5
Operating system			Coupling					V-Belt
Weight (with motor)		kg	24	33	44	73	97	120

외형사이즈 / Outside Dimension

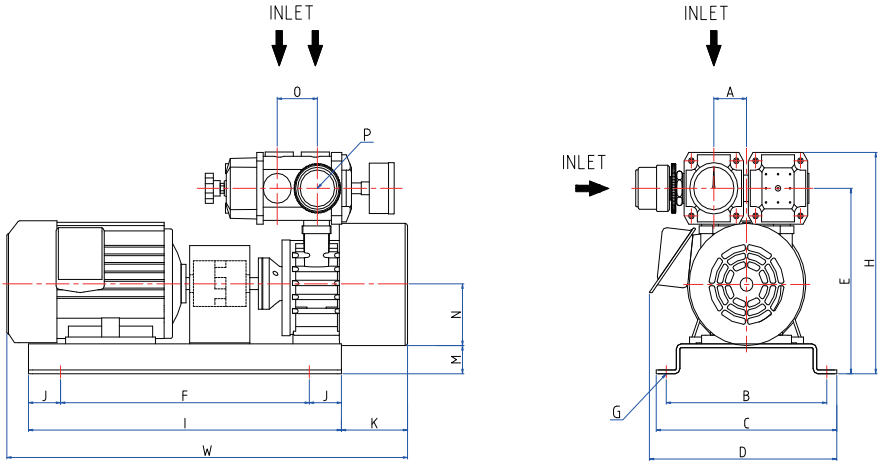

(Unit : mm)

Model	W	H	A	B	C	D	E	F	G	I	J	K	M	N	O	P
WVS-3	500	255	45	200	230	230	210	310	4-Ø9	390	40	90	32	71	50	Rc3/4″
WVS-5	560	255		200	230	250	220	310	4-Ø9	390		95	32	80		
WVS-6	650	310		225	250	270	260	395	4-Ø9	475		110	50	90		
WVS-8	720	360	50	235	270	300	300	430	4-Ø9	520	45	130	55	100	-	1″
WVS-9	764	375	60	270	290	335	322	470	4-Ø9	570	50	118		112	-	

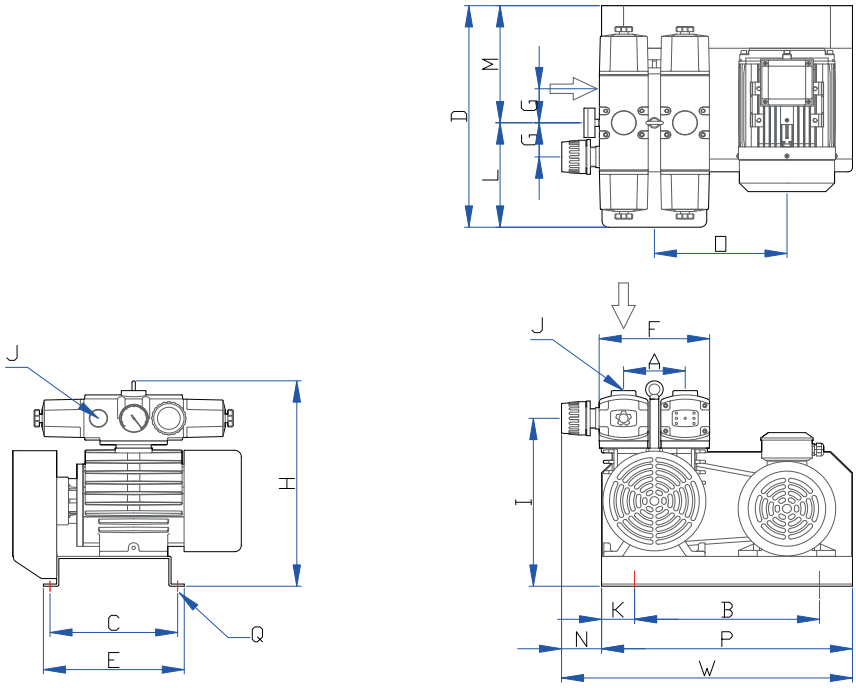

(Unit : mm)

Model	W	D	H	A	B	C	E	F	G	I	J	K	L	M	N	O	P	Q
WVS-10A	660	520	482	140	420	290	320	251	-	394	1-1/4″	75	245	275	80	301	570	Ø11-4

ISP

제품 특징 / Overview

- 터보팬과 직결식의 유니버설 모터를 채용하여 심플하다.
- 메인터넌스에 용이하다.
- 100% Oil-Free Clean Air로 작동된다.
- 진동과 소음(48dB~57dB)이 적다.
- 깨끗한 작업환경을 조성할 수 있다.
- 1~20 Pa의 중진공, 고진공 압력과 50~1000 ℓ/min의 배기량을 가진 모델들로 구성되어 있다.

- It is simple as it applied a turbofan and a direct universal motor.
- Maintenance is easy.
- It operates with 100% Oil-Free Clean Air.
- Vibration and noise levels are low(48dB~57dB).
- A clean working environment can be created.
- It consists of models with medium and high vacuum pressure of 1 Pa to 20 Pa, and exhaust volume of 50 ℓ/min to 1000 ℓ/min.

기술정보 / Technical Data

Description		Unit	ISP-50	ISP-90	ISP-250E	ISP-500C	ISP-1000E
Pumping speed	50Hz	ℓ/min	50	90	250	500	1000
	60Hz	ℓ/min	60	108	300	600	1200
Ultimate pressure	50Hz	Pa	≤20	≤5	≤1.6	≤1	≤1
	60Hz	Pa	≤15	≤5	≤1.6	≤1	≤1
Motor power		kW	0.1	0.15	0.4	0.6	1.4
Port size	Inlet	DN	NW25KF	NW25KF	NW25KF	NW40KF	NW40KF
	Outlet	DN	NW16KF	NW16KF	NW16KF	NW25KF	NW40KF
Voltage	Single Phase	V	100, 115, 200, 230				N/A
	Three Phase	V	N/A		200, 208, 230, 380, 400, 415, 460		200, 220, 230, 380, 400, 415, 460
Noise level		dB	48(at air flush 57)	52(at air flush 57)	58(at air flush 66)	62(at air flush 70)	67(at air flush 74)
Air flush		ℓ/min	4	9	10	10	10
Leak tightness		$Pa \cdot m^3/s$	$\leq 1.0 \times 10^{-7}$	$\leq 1.0 \times 10^{-5}$	$\leq 1.0 \times 10^{-7}$	$\leq 1.0 \times 10^{-5}$	$\leq 1.0 \times 10^{-5}$
Cooling system			air cooling type				
Water Vapor Capacity		g/day	3(at air flush)	5(at air flush)	25(at air flush)		
Ambient temperature		℃	5~40				10~40
Dimensions	Single Phase	mm	L317×W155×H227	L308×W214×H225	L397×W264×H338	L444×W328×H370	N/A
	Three Phase	mm	N/A	N/A	L367×W264×H338	L374×W328×H370	L549×W390×H421
Weight	Single Phase	kg	12	14	25	44	N/A
	Three Phase	kg	N/A	N/A	23	38	68

배기곡선 / Exhaust Curve

ISP-50

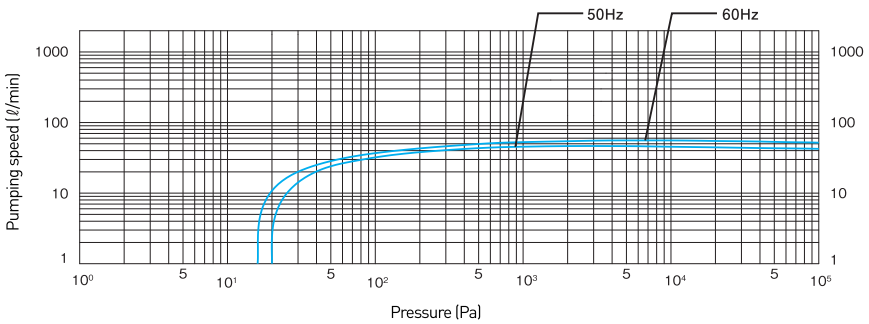

ISP-90

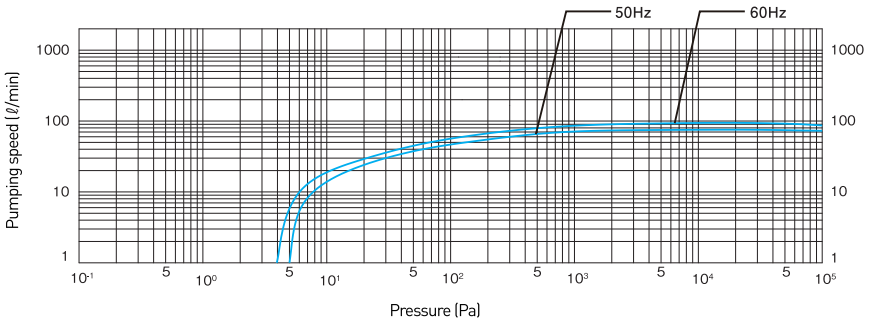

ISP-250E

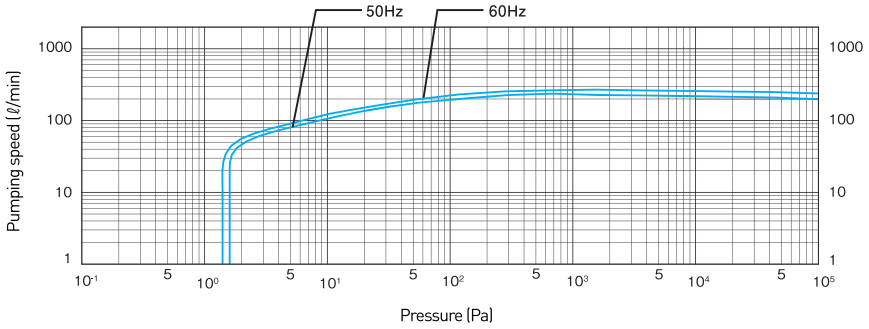

ISP-500C

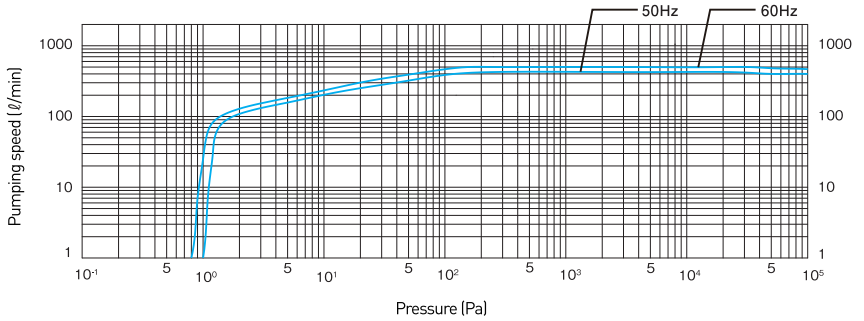

ISP-1000E

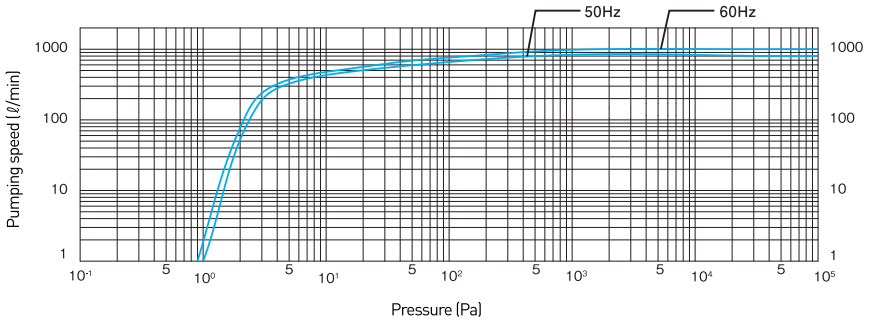

DRY PUMP

DVSL

제품 특징 / Overview

- Oil-Free Clean Air 배기 진공이 가능하다.
- 특히 수증기 배출에 강한 타입으로 RoHS 지침에 대응 가능하다.
- 중-저진공 분야에서 이상적이다.
- 분당 100L에서 1,000L의 배기량을 가졌으며, 펌프 내부의 수분을 배출하는 에어플러쉬 포트가 장착되어 있다.

- Oil-Free Clean Air exhaust vacuum is possible.
- It is a model that is specifically effective with water vapor emissions that complies with RoHS regulations.
- It is ideal in the medium and low vacuum field.
- It has a displacement of 100ℓ/min to 1,000ℓ/min. Besides, it is equipped with an air flush port that discharges moisture inside the pump.

기술정보 / Technical Data

Description		Unit	DVSL-100C	DVSL-500E	DVSL-1002E
Pumping speed	50Hz	ℓ/min	100	433	863
	60Hz	ℓ/min	120	516	1024
Ultimate pressure		Pa	≤50	≤30	≤30
Motor power	50Hz	kW	0.3	0.9	1.8
	60Hz	kW	0.3	1.1	2.4
Port size	Inlet	mm	NW25	NW25	Rc1
	Outlet	mm	NW16	NW25	NW25(2 places)
Voltage	Single Phase	V	100, 115, 200, 230	N/A	N/A
	Three Phase	V	N/A	200, 220, 230, 380, 400, 415, 460	200,220
Noise level		dB	62(with air flush 65)	64(with air flush 69)	69(with air flush 74)
Ambient temperature		℃	5~40	5~40	5~40
Water Vapor Capacity		g/day	100(at air flush)	250(at air flush)	250(at air flush)
Cooling system			air cooling type		
Dimensions		mm	L380×W221×H218	L521×W317×H280	L708×W467×H794
Weight		kg	17	34	118

• ( )안의 수치는 흡기구 상향시의 치수입니다.
• The figure inside ( ) is the measurement when the inlet port is raised.

VDP

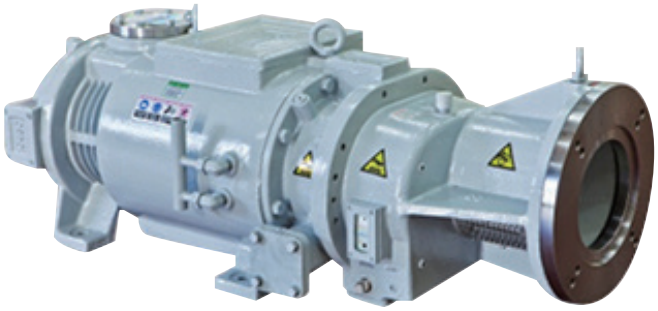

제품 특징 / Overview

- 깨끗한 진공을 생성한다.
- 각종 고형물을 쉽게 배기구로 배출 가능하다.
- 독성, 부식성 그리고 응축성 가스로부터 펌프를 보호할 코팅막 적용이 가능하다.
- 저렴한 운전비용이 든다.
- 쉬운 유지/보수가 가능하다.
- CASING 및 스크류의 접촉되는 부분이 없어 펌프의 수명이 길다.
- 높은 체적효율을 갖고 있다.
- C-Flange type으로 설치가 간단하고 소음 및 진동을 줄일 수 있으며 Shaft Alighment를 맞출 필요 없다.

- Clean vacuum can be created.
- Various solids can be easily discharged through the outlet port.
- Coating films are applicable to protect pumps from toxic, corrosive and condensed gases.
- Operation costs are low.
- Maintenance is easy.
- The lifespan of the pump is long as there is no contact surface between the casing and the screw.
- It has high volumetric efficiency.
- The C-Flange type enables simple installation and reduction of noise and vibration. There is also no need for shaft alignment.

기술정보 / Technical Data

Description		Unit	VDP-150	VDP-330	VDP-400	VDP-800
Nominal pumping speed	50Hz	m^3/hr	120	270	360	720
	60Hz	m^3/hr	150	330	400	800
Ultimate pressure	50Hz	Torr	0.1	0.1	0.03	0.03
		kPa	1.3×10^{-2}	1.3×10^{-2}	4.0×10^{-3}	4.0×10^{-3}
	60Hz	Torr	0.05	0.05	0.01	0.01
		kPa	6.6×10^{-3}	6.6×10^{-3}	1.3×10^{-3}	1.3×10^{-3}
Motor power	50Hz	kW	3.7	7.5	11	19
	60Hz	kW	5.5	11	15	22
Port size	Inlet	mm	40A	50A	65A	100A
	Outlet	mm	40A	40A	50A	65A
Rotation speed	50Hz	R.P.M	2900	2900	2900	2900
	60Hz	R.P.M	3500	3500	3500	3500
Gear oil		L	1.3	1.6	2	4
Cooling water		ℓ/min	4	8	11	20
Weight		kg	220	310	400	600

DRY PUMP

VDPH

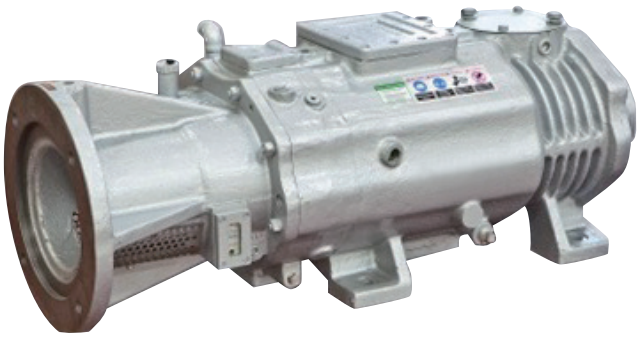

제품 특징 / Overview

- 오일과 물이 없는 건식운전으로 작동한다.
- 간결한 디자인의 1단 펌프이다.
- 펌프내 가스의 통로가 짧아 가스의 신속한 배출이 이루어진다.
- 스크류타입의 ROTOR를 사용함에 따라 높은 체적효율을 이끌어 낸다.
- ATEX 인증 획득.

- Dry operation without oil or water.
- Single stage and simple design.
- Gas can be discharged quickly due to the short length of gas passage inside the pump.
- High volume efficiency as screw type ROTOR is used.
- ATEX Certification aquired.

기술정보 / Technical Data

Description		Unit	VDPH-120	VDPH-200	VDPH-320	VDPH-430	VDPH-800	VDPH-1000	VDPH-1500	VDPH-1800	VDPH-2700
Nominal Displacement	50Hz	m^3/hr	100	155	267	358	625	750	1300	1500	2250
	60Hz	m^3/hr	120	187	320	430	750	900	1500	1800	2700
Ultimate Pressure	50Hz	kPa	1.3×10^{-2}	6.6×10^{-2}	4.0×10^{-3}	4.0×10^{-3}	4.0×10^{-3}	4.0×10^{-3}	1.3×10^{-2}	1.3×10^{-2}	1.3×10^{-2}
	60Hz	kPa	6.6×10^{-3}	2.7×10^{-3}	2.7×10^{-3}	2.7×10^{-3}	$1.3.\times10^{-3}$	1.3×10^{-3}	6.6×10^{-3}	6.6×10^{-3}	6.6×10^{-3}
	50Hz	Torr	0.1	0.05	0.03	0.03	0.03	0.03	0.1	0.1	0.1
	60Hz	Torr	0.05	0.02	0.02	0.02	0.01	0.01	0.05	0.05	0.05
Motor power		kW	3	5.5	7.5	11	15	18.5	37	45	55
		HP	4	7.5	10	15	20	25	50	60	75
Rotation speed	50Hz	R.P.M	2900	2900	2900	2900	2900	2900	1450	1450	1450
	60Hz	R.P.M	3500	3500	3500	3500	3500	3500	1750	1750	1750
Port size	Inlet	mm	40A	40A	50A	65A	100A	100A	125A	125A	150A
	Outlet	mm	40A	40A	40A	50A	65A	65A	80A	80A	100A
Cooling Water		ℓ/min	3	5	8	11	20	20	36	40	48
Weight		kg	150	220	300	400	600	600	1350	1350	1650

VSP

제품 특징 / Overview

- 펌프 내부에 물이나 오일이 필요하지 않다.
- 오일이나 물을 교체할 필요가 없으므로 폐수, 폐유처리 비용이 들지 않는다.
- 펌프 내부의 심플한 스크류 타입 디자인으로 프로세스 유입을 원활하게 배출시키며, 잔여물이 생기지 않는다.
- 스크류와 케이싱 사이에는 금속간의 접촉이 전혀 없기 때문에 펌프의 수명이 길고, 유지 보수가 빠르고 쉽다.
- 진동이 적고 소음이 작다.
- 드라이 샤프트 씰 디자인이 물이나 오일의 오염을 방지하여 깨끗한 공정을 보장해 준다.
- 스크류 타입 펌프는 대기압에서부터 모든 압력 영역에서 연속 운전이 가능하다.
- 가스와 접액 되는 모든 부품에는 내식성이 우수한 특수 테프론 코팅 처리되어 있다.
- 고속, 고온에 적합하며, 용량이 커서 시스템용으로도 적합하다.

- No water or oil is required inside the pump.
- Costs of wastewater or waste oil treatment can be saved as there is no need to replace oil or water.
- The simple screw type design inside the pump allows the smooth discharges of process inflow while no residue is generated.
- The life span of the pump is long and maintenance is fast and easy as there is no metal contact between the screw and the casing.
- Vibration and noise are low.
- The dry shaft seal design ensures a clean process by preventing contamination of water or oil.
- Screw type pumps can be operated continuously in all pressure ranges from atmospheric pressure.
- All parts in contact with gas are coated with special Teflon that is excellent in corrosion resistance.
- It is appropriate for high speed and high temperature environment, and is also suitable for systems due to its large capacity.

기술정보 / Technical Data (Constant Pitch)

Description		Unit	VSP-150	VSP-300	VSP-400	VSP-800
Nominal pumping speed	50Hz	m^3/hr	120	240	330	600
	60Hz	m^3/hr	150	300	400	800
Ultimate pressure	50Hz	Torr	0.5	0.1	0.1	0.07
	60Hz	Torr	0.3	0.08	0.05	0.03
Motor power	50Hz	kW	3.7	7.5	11.5	19
	60Hz	kW	5.5	11	15	22
Port size	Inlet	mm	40A	50A	65A	100A
	Outlet	mm	40A	40A	50A	65A
Rotation speed	50Hz	R.P.M	2900	2900	2900	2900
	60Hz	R.P.M	3450	3450	3450	3450
Gear oil		L	1.5	1.7	2.5	4
Cooling water		ℓ/min	2	3.5	7	10
Weight		kg	230	350	430	630

기술정보 / Technical Data (Variable Pitch)

Description		Unit	VSPH-100	VSPH-210	VSPH-310	VSPH-600
Nominal pumping speed	60Hz	m^3/hr	80	170	250	500
Ultimate pressure	60Hz	Torr	0.003	0.002	0.002	0.002
Motor power	60Hz	kW	5.5	7.5	11.5	18.5
Port size	Inlet	mm	40A	50A	65A	100A
	Outlet	mm	40A	40A	50A	65A
Rotation speed	60Hz	R.P.M	3600	3600	3600	3600
Gear Oil		L	1.5	1.7	2.5	4
Cooling water		ℓ/min	2	3.5	7	10
Weight		kg	230	350	430	630

배기곡선 / Exhaust Curve

Performance Curve VSP Series (60Hz)

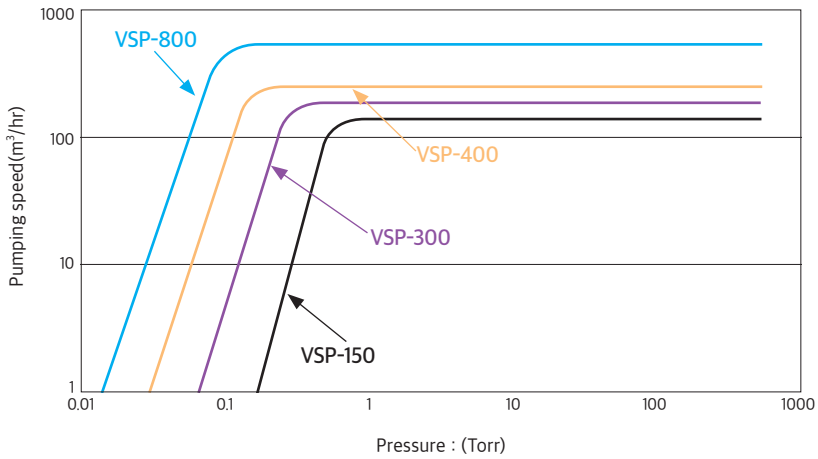

Performance Curve VSPH Series (60Hz)

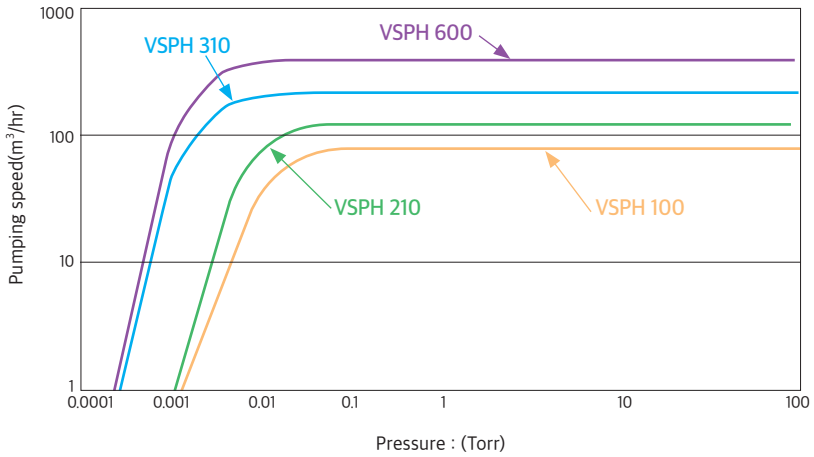

FRU

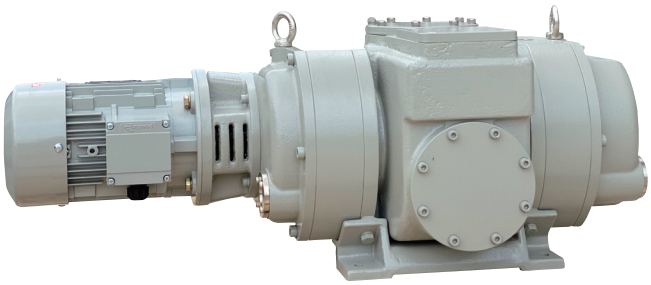

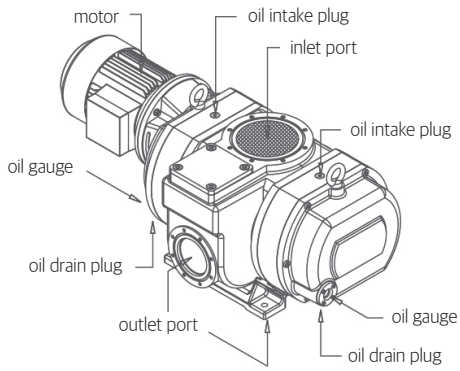

제품 특징 / Overview

- by-pass valve 구조의 펌프로써 대기압 상태에서 후단 펌프와 동시에 작동할 수 있어 작업 시간을 단축하고 에너지 소비를 감소시켜준다.
- 안정된 펌프 성능을 유지하며 모든 진공 작업 공정에 사용 가능하다.
- 공랭식 냉각 방법을 사용한다.
- 배기구 수평, 수직 사용하는 구조로 후단 펌프와 배관 연결이 용이하다.
- ISO 국제 규격에 따른 흡입구, 배기구를 사용한다.
- 소음과 진동이 작다.
- 간단한 유지보수 및 수리가 용이하다.

- The pump structured by-pass valve can reduce not only energy consumption but also operation time because it operates together with back-up pump in atmospheric pressure condition.
- It maintains stable pump performance and can be used for all vacuum work processes.
- Air cooling method is used.
- The exhaust port is horizontally and vertically used, making it easy to connect the back-up pump with the pipe.
- Inlet and outlet port that follow ISO international standards are used.
- Vibration and noise levels are low.
- Easy maintenance and repair.

기술정보 / Technical Data

Description			Unit	FRU-180	FRU-360	FRU-720	FRU-1440	FRU-2880	FRU-5800
Pumping speed	50Hz		m^3/hr	150	300	600	1200	2400	4800
	60Hz			180	360	720	1440	2880	5800
Ultimate pressure (with 2 stage backing pump)			Torr	5×10^{-4}					
Inlet pressure (max. continuous)			Torr	760	760	760	760	760	760
Inlet port			ISO	63	63	100	160	160	250
Outlet port			ISO	63	63	100	100	160	200
Motor	Power		kW	0.75	1.1	2.2	3.7	7.5	15
	Voltage	50Hz	V	220, 380~420					
		60Hz	V	220, 380, 440					
Rotational speed	50Hz		R.P.M	3000					
	60Hz		R.P.M	3600					
Oil filling			L	0.6	0.6	1.6	2.4	4.7	7.0
Weight			kg	87	105	191	296	494	884

BOOSTER PUMP

배기곡선 / Exhaust Curve

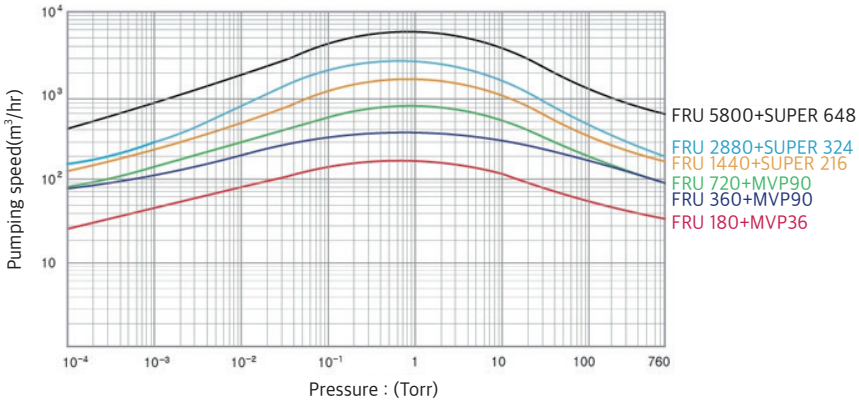

외형사이즈 / Outside Dimension

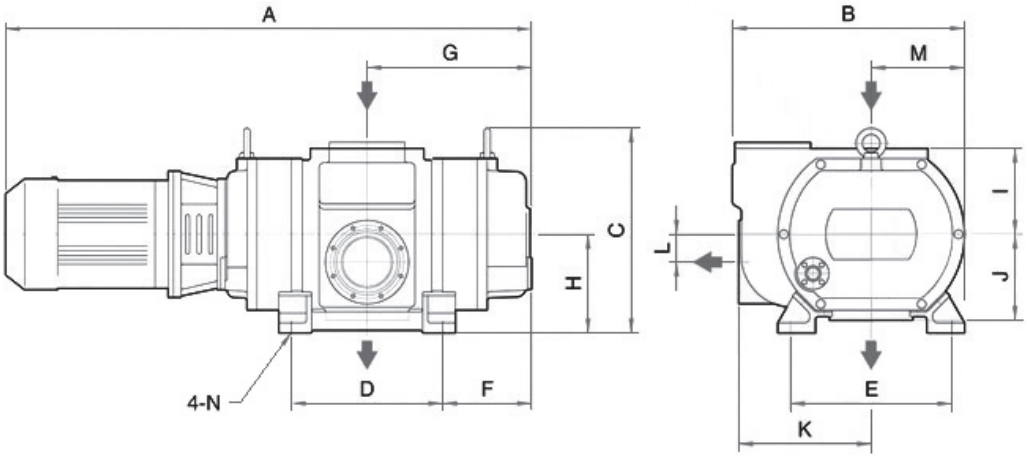

(Unit : mm)

Model	A	B	C	D	E	F	G	H	I	J	K	L	M	N
FRU-180	637	287	299	188	210	117	211	145	120	120	-	-	127	Ø13
FRU-360	797	287	299	298	210	117	266	145	120	120	-	-	127	Ø13
FRU-720	894	388	352	260	270	154	284	170	145	145	218	40	158	Ø13
FRU-1440	1040	460	405	300	320	173	323	195	170	170	262	55	185	Ø15
FRU-2880	1172	575	502	350	410	187	362	245	215	215	325	65	235	Ø18
FRU-5800	1483	680	592	480	480	190	430	285	255	255	388	80	278	Ø18

dimension of flange

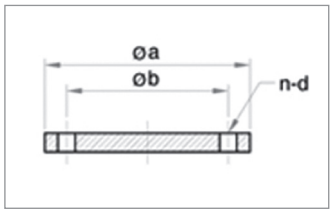

(Unit : mm)

Standard	a	b	n	d
ISO63	130	110	4	M8
ISO100	165	145	8	M8
ISO160	225	200	8	M10
ISO200	285	260	12	M10
ISO250	335	310	12	M10

VSBP

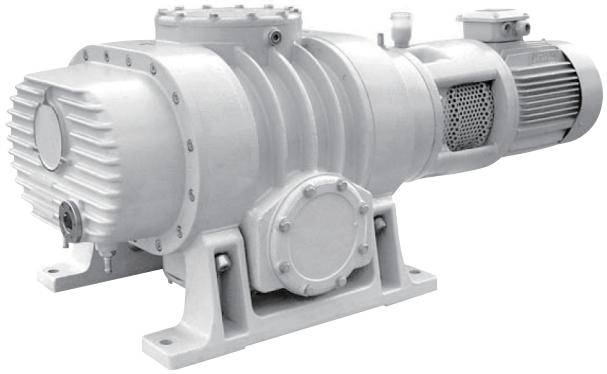

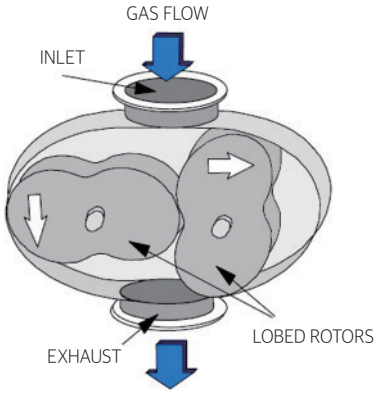

제품 특징 / Overview

- 기계적 마찰과 소음이 발생하지 않는다.
- 리지드 커플링(강제 결속 커플링) 대비 마그네틱 드라이브는 소음과 충돌이 적으며 원활한 작동이 가능하다.
- 마그네틱 드라이브는 부스터 펌프 작동 시 전력 과부하로부터 효율적으로 모터를 보호할 수 있다.
- 내부 씰링 구조는 외부 마그넷과 지속적으로 일정 거리를 유지할 수 있으며, 이를 통해 마찰 및 윤활유 오염으로부터 펌프를 보호할 수 있어 누유 현상 없이 오랜 기간 수명 유지 가능하다.
- 오일씰이 없는 구조로 최종 압력에 영향을 미치지 않으며, 펌프에는 윤활이 필요하지 않기 때문에 오염을 줄일 수 있다.

- No mechanical friction and noise.
- Compared to rigid coupling (forced coupling), magnetic drive has less collisions and noise while enabling smooth operation.
- The magnetic drive can efficiently protect the motor from power overload when operating the booster pump.
- The internal sealing structure can continuously maintain a certain distance from the external magnet, thereby protecting the pump from friction and lubricant contamination, allowing longer life of the machine without oil leak.
- It has a structure without an oil seal and does not affect the ultimate pressure. It can reduce contamination as the pump does not require lubrication.

기술정보 / Technical Data

Description		Unit	VSBP - 30C	VSBP - 70C	VSBP - 150C	VSBP - 300C	VSBP - 600C	VSBP - 1200C	VSBP - 1800C	VSBP - 2500C
Pumping speed	60/50Hz	m^3/hr	120/100	300/250	600/500	1200/1000	2400/2000	4800/4000	7200/6000	10800/9000
Ultimate pressure		Pa(Torr)	$3\times10^{-2}(2\times10^{-4})$							
Pemissible ambient temperatures		℃	5~40							
Motor Power	60/50Hz	kW	0.75	1.1	2.2	3.7	7.5	11	15	18.5
Rotation speed	60/50Hz	R.P.M	3500/2825	3500/2825	3500/2840	3500/2890	3500/2890	3500/2890	3500/2890	3500/2890
Oil Filing		L	0.8	0.8	2.8	2.8	7.5	7.5	10.5	10.5
Port Size	Inlet	mm	50	80	100	150	200	250	250	250
	Outlet	mm	40	50	100	150	200	200	320	320
Cooling Water Suppy		ℓ/min	N/A	N/A	N/A	N/A	8	10	12	12
Weight(with motor)		kg	80	80	180	245	575	800	1150	1400

• WSBP-30C - 공기 및 마그네틱 드라이브, WSBP-70C ~ 2500 - 감압 및 마그네틱 드라이브
• WSBP-30C - Atmospheric & Magnetic drive, WSBP-70C ~ 2500 - Decompression & Magnetic drive.

DIFFUSION PUMP

VSD

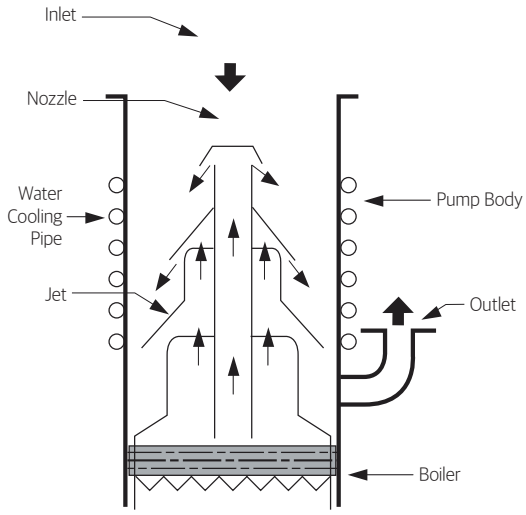

제품 특징 / Overview

- 오일을 가열하여 증발시킨 다음 이를 노즐을 통해 고속 분사 시킴으로써, 이때 충돌하는 공기분자를 아래로 끌어내려 보조 펌프를 통해 배출 시킨다.
- 이 기종의 펌프들은 대체로 구조가 간단하고 사용이 간편하여, 고 진공을 얻는데 많이 사용되고 있다.
- 다른 고 진공용 펌프와 마찬가지로 반드시 보조펌프와 함께 써야 한다.

- The oil is heated and evaporated, and then sprayed at high speed through a nozzle. Here, the colliding air molecule are pulled down and discharged through a back-up pump.
- These types of pumps are widely used to obtain high vacuums as they are generally simple in structure and easy to use.
- Like other high vacuum pumps, it must be used with a back-up pump.

기술정보 / Technical Data

Description		Unit	VSD-3Z	VSD-4Z	VSD-6Z	VSD-8Z	VSD-10Z	VSD-14Z	VSD-22Z	VSD-26Z
Pumping Speed	Without Baffle	ℓ/sec	360	570	1200	1950	3000	5500	13000	18500
	With Baffle		220	310	660	1100	1650	3030	7200	10200
Ultimate Pressure With Baffle		Torr	1.0×10^{-7}	1.0×10^{-7}	1.0×10^{-7}	1.0×10^{-7}	1.0×10^{-7}	1.0×10^{-7}	1.0×10^{-7} (1.3×10^{-5})	1.0×10^{-7} (1.3×10^{-5})
Heater Power			220V× 1Ø.450W	220V× 1Ø.700W	220V× 1Ø.1kW	220V× 1Ø.1.5kW	220V× 1Ø.1.9kW	220V× 1Ø.4.5KW	220V× 1Ø.10kW	220V× 1Ø.12kW
Warm up-Time		min	20	20	20	25	25	30	45	45
Oil Filling		cc	DC704, 100	DC704, 150	DC704, 340	DC704, 500	DC704, 820	DC704, 1600	DC704, 4000	DC704, 6000
Cooling			Water Cooling							
Oil Backstream		mg/ cm^2.min	7.5×10^{-4}	7.5×10^{-4}	2.0×10^{-4}	2.0×10^{-4}	2.0×10^{-4}	2.0×10^{-4}	2.0×10^{-4}	2.0×10^{-4}
Port Size	Inlet Port	mm	NW80	VG100	VG150	VG200	VG250	VG350	VG550	VG650
	Outlet Port	mm	NW25	VG25	VG50	VG50	VG80	VG100	VG200	VG250
Weight		kg	6	10	20	30	41	120	430	500

배기곡선 / Exhaust Curve

Pumping Speed Curve

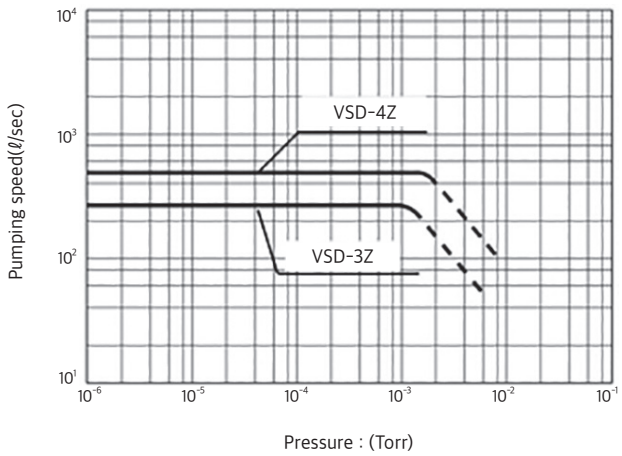

Options VSD-3Z

- Oil Level Viewing Port : CF 35
- Diffusion Oil : 100cc
- Bimetal : 60℃ OFF
- Quick Cooling unit(Cu pipe)

Options VSD-4Z

- Oil Level Viewing Port : CF 35
- Diffusion Oil : 150cc
- Bimetal : 60℃ OFF
- Quick Cooling unit(Cu pipe)

Pumping Speed Curve

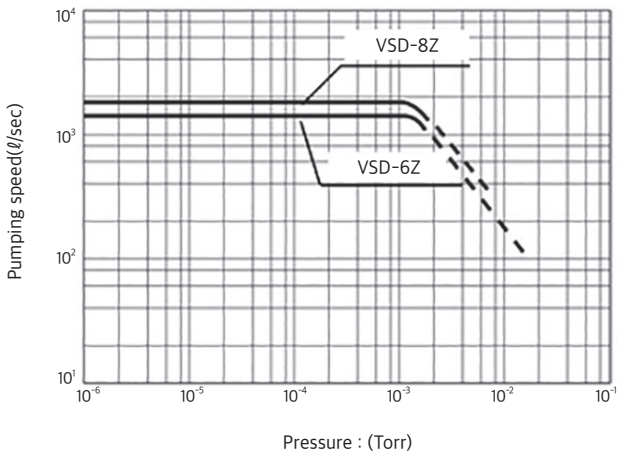

Options VSD-6Z

- Oil Level Viewing Port : CF 35
- Diffusion Oil : 340cc
- Bimetal : 60℃ OFF
- Quick Cooling unit(Cu pipe)

Options VSD-8Z

- Oil Level Viewing Port : CF 35
- Diffusion Oil : 500cc
- Bimetal : 60℃ OFF
- Quick Cooling unit(Cu pipe)

Pumping Speed Curve

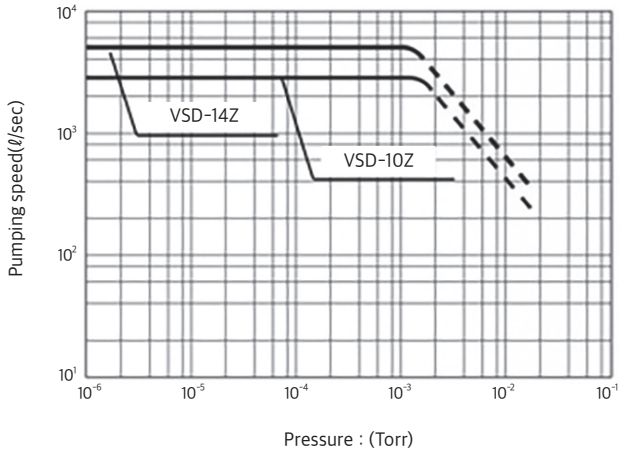

Options VSD-10Z

- Oil Level Viewing Port : CF 35
- Diffusion Oil : 820cc
- Bimetal : 60℃ OFF

Options VSD-14Z

- Oil Level Viewing Port : CF 35
- Diffusion Oil : 1600cc
- Bimetal : 60℃ OFF

Pumping Speed Curve

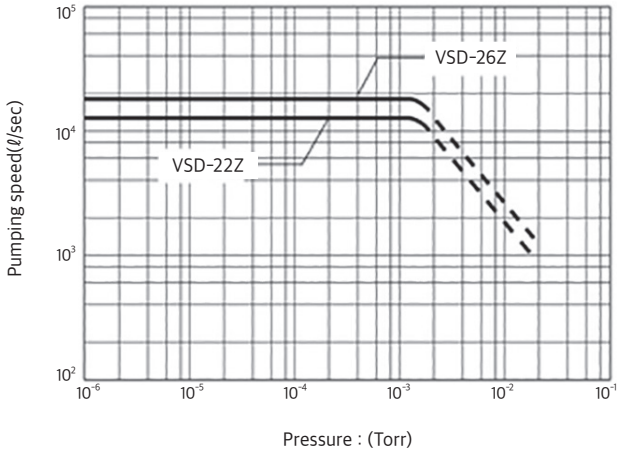

Options VSD-22Z

- Oil Level Viewing Port : CF 35
- Diffusion Oil : 4000cc
- Bimetal : 60℃ OFF

Options VSD-26Z

- Oil Level Viewing Port : CF 35
- Diffusion Oil : 6000cc
- Bimetal : 60℃ OFF

VACUUM SYSTEM

Booster Pumping System

VSB (Dry Type) Series

Description		VSB -5K	VSB -10K	VSB -20K	VSB -40K	VSB -80K	VSB -160K
Pumping Speed (m^3/hr)	60Hz	215	600	1200	2420	4700	9600
	50Hz	180	500	1000	2010	3850	8000
Ultimate Pressure		5.3×10^{-4} Torr (7.2×10^{-2} Pa)					
Package Power (kW)		1.9	13.2	19	29.5	40.5	59
Inlet Port (A)		80	100	100	150	200	300
Outle Port (A)		40	40	50	80	80	80
Weight (kg)		132	465	585	890	1325	2185

Reserve Tank System

제품 특징 / Overview

- 본 장비는 중앙 진공 공급 장치인 진공 리시브 탱크 시스템으로 진공펌프를 사용함에 있어 탱크 내부를 진공으로 만들어 놓은 상태에서 필요한 공정 작업을 진행할 수 있는 장비로 연속 공정에서의 에너지 효율이 높은 장비이다.
- This equipment is a reserve tank system, which is a central vacuum supply device. It is an equipment capable of performing necessary operations in a state where the inside of a tank is made into a vacuum when using vacuum pump. It has high energy efficiency for continuous processes.

Automatic He leak Tester System

제품 특징 / Overview

- 본 장비는 진공 기밀을 이용한 자동화 He 누설 검사 장비로 각종 제품에 대한 미세누설 부분 및 누설 결함을 정밀하게 파악하는 장비로서 주요 특징 중 하나인 헬륨의 회수 기능을 90% 이상 구현하여 고가의 He 비용을 절감할 수 있는 장비이다.
- This equipment is an automated helium leakage inspection equipment using vacuum sealing that accurately identifies fine leakage for various products, which can reduce expensive helium costs by recovering more than 90% of helium gas as one of its main features.

High Vacuum Test & Calibration System

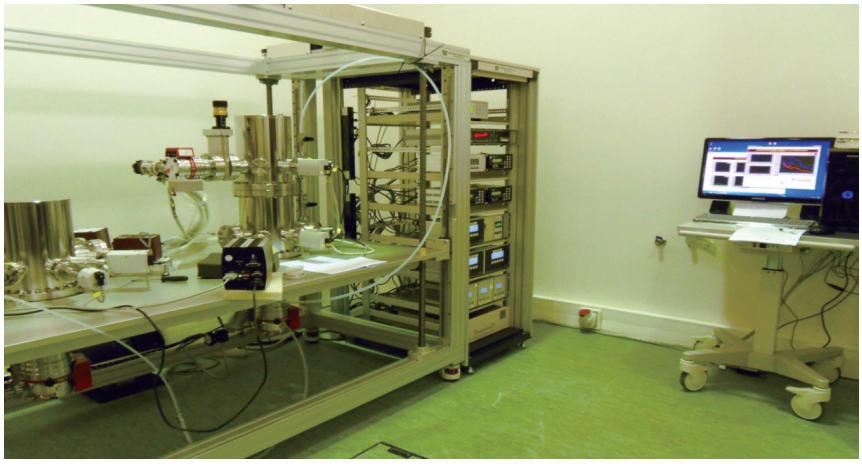

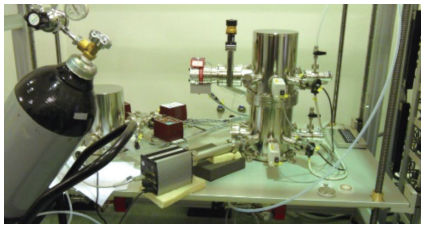

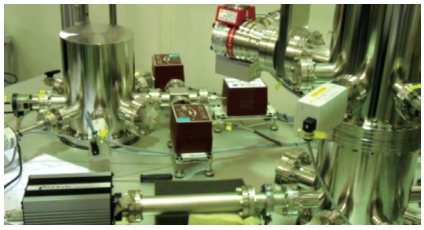

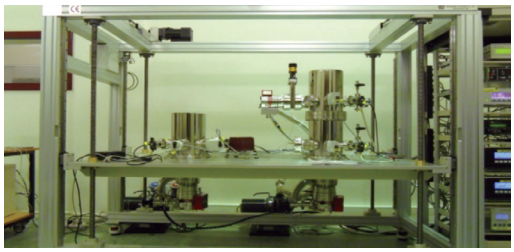

제품 특징 / Overview

- 본 장비는 진공원천기술 연구 및 진공펌프 종합성능평가 이외에 잔류기체분석장비(QMS)를 이용한 시스템을 활용할 수 있는 장비로 신뢰성 확보를 위한 ISO, AVS 등의 국제규격에 의한 국제규격에 따른 평가절차에 기본으로 둔 장비이다.
- This is an equipment that can utilize a system that uses Quadrupole Mass Spectrometers(QMS) in addition to research on vacuum technology and comprehensive performance evaluation of vacuum pumps. It is an based on evaluation procedures according to international standards such as ISO and AVS to secure reliability.

VACUUM SYSTEM

Glove Box

제품 특징 / Overview

- 본 장비는 수분이나 산소 등에 민감한 물질을 취급할 때 오염을 방지하는 장비로 물질의 화학적 반응을 억제하기 위하여 고순도의 불활성 기체로 치환된 밀폐 상자이다. 투명창에 부착된 글러브를 통하여 상자 내부에 필요한 작업을 진행할 수 있으며, 물질을 보관하거나 반출할 수 있는 장비로 상자 내부의 산소와 수분 함유율을 1 ppm 이하로 유지하기 위한 전용 purifier를 적용한 장치이다.
- This is an equipment that prevents contamination when handling substances sensitive to moisture, oxygen etc., and is a sealed container substituted with a high-purity inert gas to suppress the chemical reaction of the material. This device can perform the necessary work inside a container through a glove attached to a transparent window, and can store or take out materials. A dedicated purifier is used to maintain the oxygen and moisture contents inside the container below 1 ppm.

Hyper Tube System

제품 특징 / Overview

- 미래 교통 기술 중 하나인 Hyper Tube의 기초 시험 단계인 아진공 튜브용 진공챔버 기밀성 테스트 시스템으로 초고속 열차가 운행하는 진공 튜브 내의 진공 형성 및 진공을 유지하기 위한 조건과, 대기압 하에서 목표 진공도(1mbar)까지 배관의 컨덕턴스의 변화에 따른 펌핑 시간을 측정하여, 향후 실증 시험 시 진공펌프의 배치 수량을 결정하기 위한 기초자료를 확보로 목표로 한 시스템이다.
- This is a vacuum chamber airtightness test system for a partial vacuum tube, a basic test stage of Hyper Tube, one of the future transportation technologies. The system aims to secure basic data to determine the quantity of vacuum pumps in future verification tests, by measuring conditions for vacuum formation and vacuum maintenance in vacuum tubes operated by ultra-high-speed trains, and the pumping time until the goal vacuum level(1mbar) is achieved according to changes in pipe conductance under atmospheric pressure.

Thermal Vacuum Chamber

극한환경 지반 대형 열진공 챔버 - 우주환경 모사장치
Extreme environment ground large thermal vacuum chamber
- Space environment simulator.

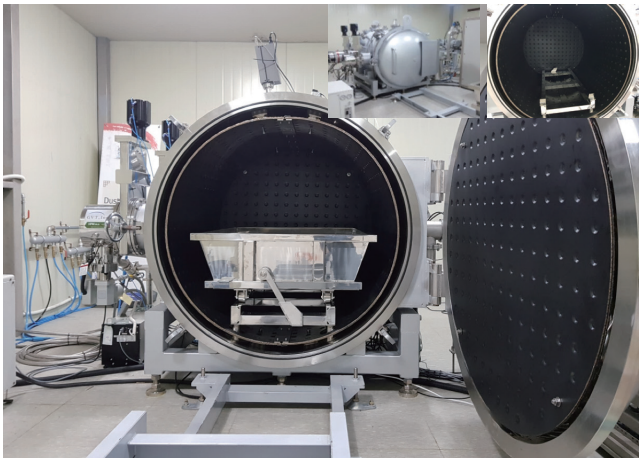

파이럿 스케일 열진공챔버 - 우주환경 모사장치
Pilot scale thermal vacuum chamber
- Space environment simulator.

제품 특징 / Overview

- 우주환경 모사장비 중 하나인 극한환경 지반 열진공 챔버는 달 환경을 모사여 달 환경에서의 성능 검사 시험을 가능하게 하는 장비로 초고진공 환경과 극저온, 태양 복사열을 재현하는 장비이다. 달 환경뿐만 아니라 우주 환경에 대한 모사기술을 확립할 수 있으며 대형 챔버의 설계 및 제작에 대해 가이드라인을 제시하며 향후 우주 시험들에 대해 달 환경 및 우주 환경 기반 시험기술을 확보할 수 있다.
- One of the space environment simulation equipment, the extreme environment ground thermal vacuum chamber simulates the moon environment to enable performance testing in the moon environment. It reproduces ultra-high vacuum environment, cryogenic temperature, and solar radiation heat. It can establish simulation technologies also for the space environment, provide guidelines for the design and production of large chambers, and secure test technologies based on the moon and space environment for future space tests.

Technical R&D Center

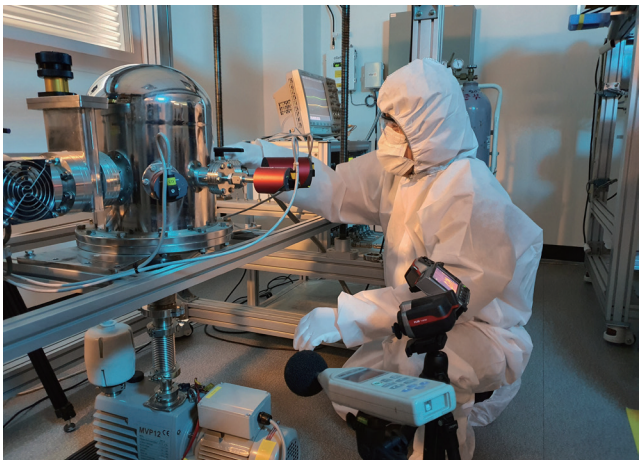

- 자사에서 직접 운영 중인 연구실로 연구소 내에 진공펌프성능평가시스템, 게이지검교정시스템 등 진공 전반에 관련하여 개발 및 연구에 필요한 시스템을 갖추고 있다.
- It is a Technical R&D center that operated directly by the company and has systems necessary for development and research in relation to the overall vacuum, such as a vacuum pump performance evaluation system and a gauge calibration system.

VACUUM SYSTEM

Exhaust Vacuum System

Reserve Tank System

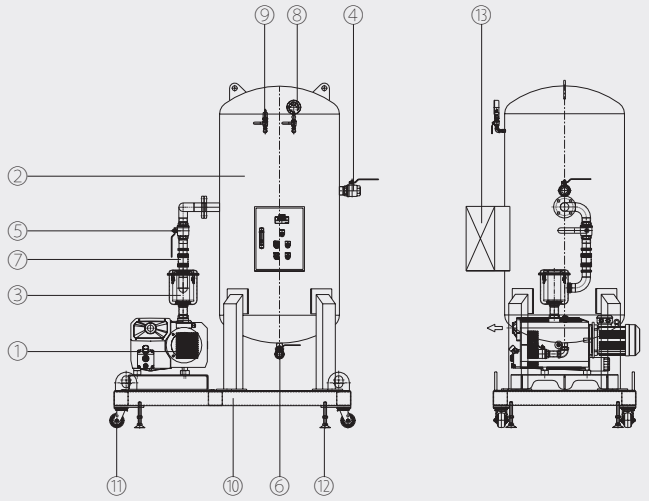

① OIL ROTARY VACUUM PUMP
② VACUUM TANK
③ INLET FILTER
④ MANUAL BALL VALVE
⑤ MANUAL BALL VALVE
⑥ MANUAL BALL VALVE
⑦ BELLOWS TUBE
⑧ VACUUM GAUGE
⑨ PRESSURE TRANSMITTER
⑩ FRAME
⑪ CASTER
⑫ LEVEL FOOT
⑬ CONTROL PANEL

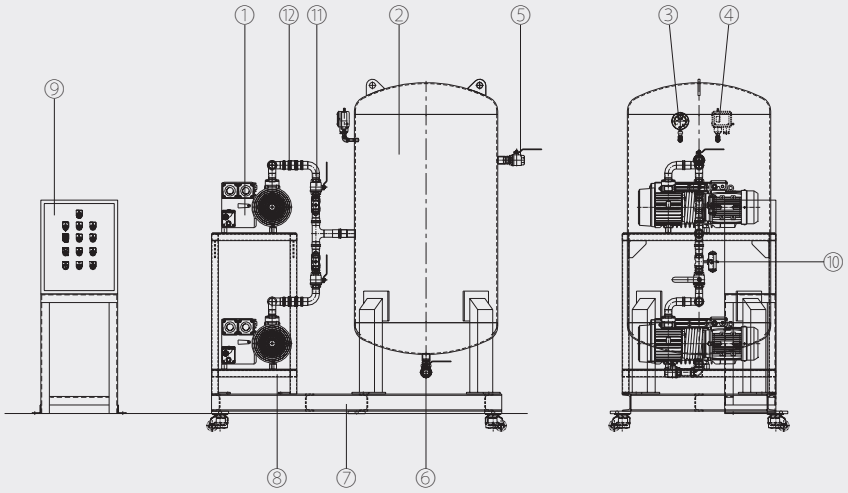

① VACUUM PUMP
② VACUUM TANK
③ VACUUM GAUGE
④ VACUUM SWITCH
⑤ SUCTION BALL VALVE
⑥ DRAIN BALL VALVE
⑦ COMMON BED
⑧ PUMP FRAME
⑨ CONTROL PANEL
⑩ PNEUMATIC BALL VALVE
⑪ BALL VALVE
⑫ BELLOWS TUBE

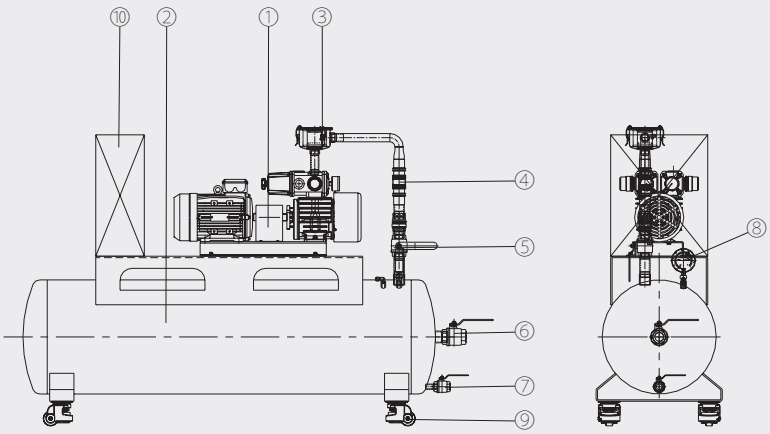

① DRY CARBON VANE PUMP
② VACUUM TANK
③ INLET FILTER
④ BELLOWS TUBE
⑤ VACUUM BALL VALVE
⑥ MAIN BALL VALVE
⑦ DRAIN BALL VALVE
⑧ BOURDON GAUGE
⑨ FOOT MASTER
⑩ CONTROL PANEL

Watering Vacuum System

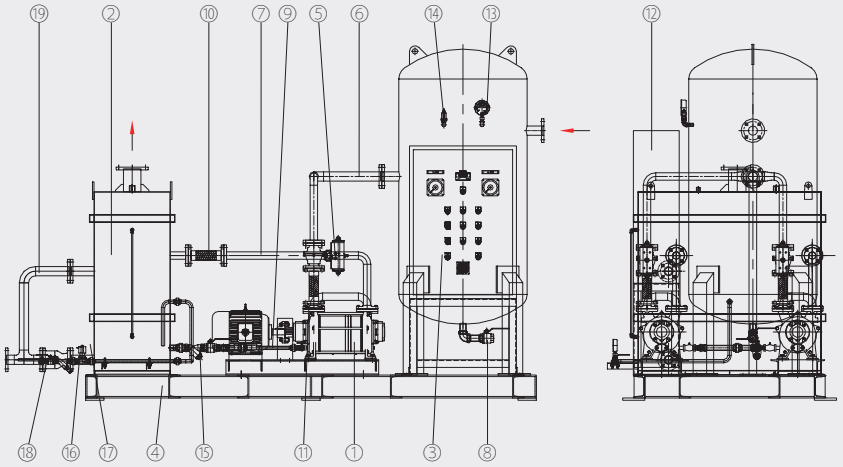

① WATER RING V/PUMP
② SEPARATOR TANK
③ VACUUM CHAMBER
④ COMMON BED
⑤ PNEUMATIC VALVE
⑥ SUCTION LINE PIPING
⑦ DISCHARGE LINE PIPING
⑧ TANK VENT BALVE
⑨ PUMP WATER SUPPLY LINE
⑩ FLEXIBLE
⑪ CHECK VALVE
⑫ CONTROL BOX
⑬ VACUUM GAUGE
⑭ PRESSURE TRANSMITTER
⑮ STRAINER
⑯ STRAINER
⑰ PRESSURE GAUGE
⑱ SEPATATOR TANK DRAIN VALVE
⑲ OVER FLOW LINE

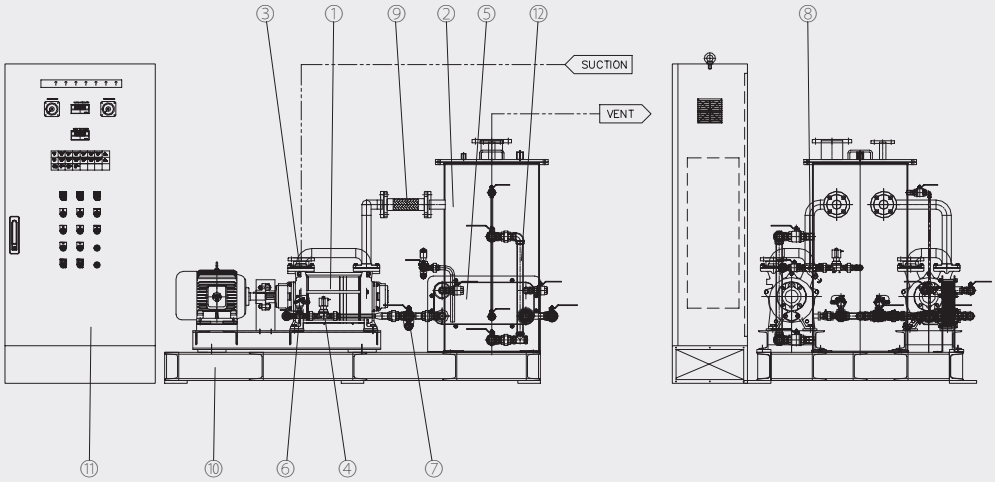

① WATER RING V/PUMP
② SEPARATOR TANK
③ CHECK VALVE
④ SOLENOID VALVE (HKW-154B)
⑤ HEAT EXCHANGER (PLATE TYPE)
⑥ WATER FLOW SWITCH
⑦ STRAINER
⑧ STRAINER
⑨ FLEXIBLE
⑩ COMMON BED
⑪ CONTROL PANEL
⑫ OVER FLOW LINE

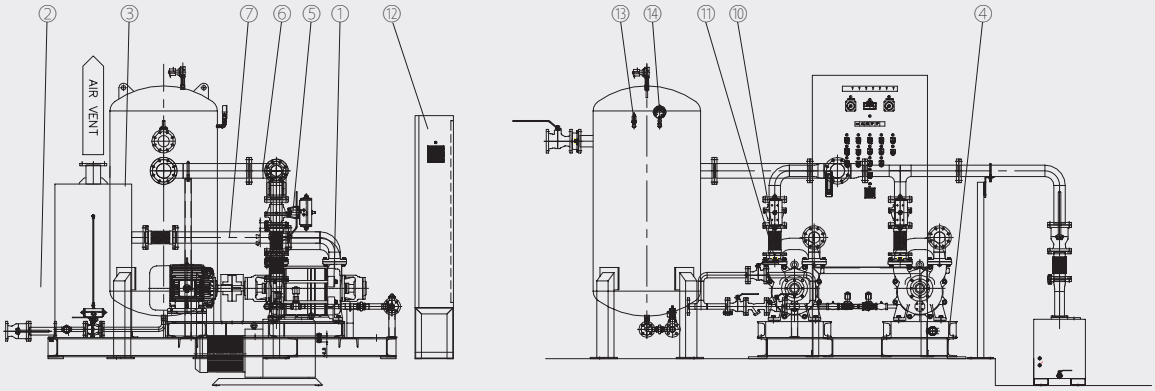

① WATER RING V/PUMP
② SEPARATOR TANK
③ VACUUM CHAMBER
④ COMMON BED
⑤ PNEUMATIC VALVE
⑥ SUCTION LINE PIPING
⑦ DISCHARGE LINE PIPING
⑧ DRAIN LINE PIPING
⑨ WATER LINE PIPING
⑩ FLEXIBLE
⑪ CHECK VALVE
⑫ CONTROL BOX
⑬ VACUUM GAUGE
⑭ PRESSURE TRANSMITTER

VACUUM GAUGE

KVC

2300N

450

5000N

900

Controller Specification

	KVC450	KVC900	KVC2300N & 3300N	KVC5000N
Measuring range for air and N_2	1.0E-3 ~ 1000 Torr	1.0E-10 ~ 1.0E-02 Torr (ION Gauge) 1.0E-03 ~ 1000 Torr (SHIM Gauge) 1.0E-03 ~ 1500 Torr (ATM SHIM Gauge)	1.0E-3 ~ 1000 Torr	1.0E-8 ~ 1.0E-3 1.0E-3 ~ 1000 Torr (SHIM Gauge) 1.0E-3 ~ 1500 Torr (ATM SHIM Gauge)
Operating temperature	0 ~ 60 ℃	0 ~ 60 ℃	0 ~ 60 ℃	0 ~ 60 ℃
Storage temperature	-40 ~ 70 ℃	-40 ~ 70 ℃	-40 ~ 70 ℃	-40 ~ 70 ℃
Case material	Aluminum	Aluminum or Plastic	Aluminum	Aluminum or Plastic
Compliance	CE (EMC)	CE (LVD)	CE (EMC, LVD)	-
Display	4 Digit LED, Status LED	4 Digit LED 3CH, Status LED	4 Digit LED, Status LED	4 Digit LED 3CH, Status LED
Set point relays	2 Point SPST (5A / 30VDC, 5A / 250VAC)	6 Point SPST (1A / 24VDC, 0.5A / 125VAC)	2 Point SPST (5A / 30VDC, 5A / 250VAC)	8 Point SPST (1A / 24VDC, 0.5A / 125VAC)
Analog output	Log scale (-3 ~ 3Vdc) Adjustable Bias/ Scale Lin Scale (0 ~ 10Vdc) Fixed	ION : Log Scale (-10 ~ -2Vdc) SHIM : Log scale (-3 ~ 3Vdc) Adjustable Bias / Scale Voltage	Log scale (-3 ~ 3Vdc) Adjustable bias voltage	Penning : Log scale (-8 ~ -2Vdc) SHIM : Log scale (-3 ~ 3Vdc)×2CH Adjustable Bias / Scale Voltage
Digital interface	485 ASC II , 485 MODBUS	RS232 / 485 ASC II	RS232 / 485 ASC II , RS2332 / 485 MODBUS	RS232 / 485 ASC II , RS2332 / 485 MODBUS
Power required	DC24V / 200mA	A (220V (AC110V Optional)) 120VA	AC85 ~265V / 20VA 50 ~ 60Hz	AC220V (AC110V Optional) 20VA
Weight	450g (With Sensor)	Controller : 2.2 kg / Power supply : 5.2 kg	645g	3.2 kg
Mounting	Field Flange mounting	Panel mounting	Panel mounting (DIN 96×96 mm)	Panel mounting

Sensor Specification

	KVC450	KVC900	KVC2300N & 3300N	KVC5000N
Sensor type	KVC 450 Sensor	B-A Ionization Gauge SHIM Gague (KVC400 - XX) ATM SHIM Gauge (KVC500 - XX)	SHIM GAUGE (KVC400 - XX)	Penning Gauge SHIM GAUGE (KVC400 - XX) ATM SHIM Gauge (KVC500 - XX)
Sensor materials	Gold Plated tungsten or Platinum	Tungsten gold Plated tungsten or Platinum Piezoresistive Silicon Sensor (ATM SHIM Gauge)	Gold Plated tungsten or Platinum	SUS Anoide pin Gold Plated tungsten or Platinum Piezoresistive Silicon Sensor with SUS housing (ATM SHIM Gauge)
Internal volume	45 cm^3	280 cm^3 / 45 cm^3	45 cm^3	20 cm^3 / 45 cm^3
Gauge bakeout temperature	150 ℃ Maximum, NON - operating			
Case materials	304 Stainless steel, borosilicate glass, Kovar			

⚠ 센서 케이블은 자른 후 재연결하거나 다른 케이블로 연장하여 사용하지 마십시오. 상기의 경우에는 Noise발생의 원인이 되며, 정확한 진공도를 측정할 수 없습니다.
⚠ 폭발성 대기상태, 가연성 가스와 증기가 있는 곳에 사용하지 마십시오.(KVC450)
⚠ 폭발성가스, 가연성가스, 혼합가스의 압력을 측정하기위해 사용하지 마십시오. SENSOR FILAMENT는 일반적으로 동작 시 온도가 110℃ 입니다.(KVC450)
⚠ Do not cut and reconnect sensor cables or extend them with other cables. It can cause noise and the exact degree of vacuum cannot be measured.
⚠ Do not use it in explosive atmospheric conditions, where combustible gases and vapors are present.(KVC450)
⚠ Do not use it to measure the pressure of explosive gases, combustible gases, or mixed gases. Sensor filament generally has a temperature of 110 ℃ during operation.(KVC450)

KC

430

440

Controller Specification

	KC430	KC440
Measuring range for air and N_2	1.0E-3 ~ 1000 Torr	1.0E-3 ~ 1500 Torr
Operating temperature	0 ~ 60 ℃	0 ~ 60 ℃
Storage temperature	-40 ~ 70 ℃	-40 ~ 70 ℃
Case material	ABS Glass	ABS Glass
Compliance	CE (EMC)	-
Display	4 Digit LED	4 Digit LED
Set point relays	None	None
Analog output	Log scal (-3 ~ 3Vdc) Lin scal (0 ~ 10Vdc)	Log scal (-3 ~ 3Vdc) Lin scal (0 ~ 10Vdc)
Digital interface	None	None
Power required	DC24V / 200mA	DC24V / 200mA
Weight	260g (With Sensor)	260g (With Sensor)
Mounting	Local mounting	Local mounting

Sensor Specification

	KC430	KC440
Sensor type	SHIM GAUGE (KVC400 - XX)	ATM SHIM GAUGE (KVC500 - XX)
Sensor materials	Gold Plated tungsten or Platinum	Gold Plated tungsten or Platinum
Internal volume	45 cm^3	45 cm^3
Gauge bakeout temperature	150 ℃ Maximum, NON - operating	150 ℃ Maximum, NON - operating
Case materials	304 Stainless steel, borosilicate glass, Kovar	304 Stainless steel, borosilicate glass, Kovar

⚠ 폭발성 대기상태, 가연성 가스와 증기가 있는 곳에 사용하지 마십시오.
⚠ 폭발성가스, 가연성가스, 혼합가스의 압력을 측정하기위해 사용하지 마십시오. SENSOR FILAMENT는 일반적으로 동작 시 온도가 110℃ 입니다.
⚠ Do not use it in explosive atmospheric conditions, where combustible gases and vapors are present.
⚠ Do not use it to measure the pressure of explosive gases, combustible gases, or mixed gases. Sensor filament generally has a temperature of 110 ℃ during operation.

KP

120N

Controller Specification

	KP120N
Measuring range for air and N_2	1.0E-4 ~ 10 Torr
Operating temperature	0 ~ 60 ℃
Storage temperature	-40 ~ 70 ℃
Case material	Aluminum
Compliance	CE (LVD)
Display	4 Digit LED, Status LED
Set point relays	2 Point SPST (5A / 30VDC, 5A / 250VAC)
Analog output	0Log scale (0 ~ 5Vdc) / 1Log scale (0 ~ 6Vdc)
Digital interface	RS232 / 485 ASC II , RS2332 / 485 MODBUS
Power required	AC85 ~ 265V / 20VA 50 ~ 60Hz
Weight	630 g
Mounting	Panel mounting (DIN 96×96 mm)

Sensor Specification

	KP120N
Sensor type	PIRANI GAUGE (KVC300 - XX)
Sensor materials	Gold Plated tungsten or Platinum
Internal volume	5cm^3
Gauge bakeout temperature	150 ℃ Maximum, NON - operating
Case materials	304 Stainless steel, borosilicate glass, Kovar

⚠ 폭발성 대기상태, 가연성 가스와 증기가 있는 곳에 사용하지 마십시오.
⚠ 폭발성가스, 가연성가스, 혼합가스의 압력을 측정하기위해 사용하지 마십시오. SENSOR FILAMENT는 일반적으로 동작 시 온도가 110℃ 입니다.
⚠ Do not use it in explosive atmospheric conditions, where combustible gases and vapors are present.
⚠ Do not use it to measure the pressure of explosive gases, combustible gases, or mixed gases. Sensor filament generally has a temperature of 110 ℃ during operation.

OIL MIST TRAP

VOMT

VOMT STS304 Series

VOMT Series

제품 특징 / Overview

- 국내 유일 성적서 보유 필터를 사용한다.
- 내화학 및 반응성 가스에 대한 내구성이 우수하다.
- 배기 효율이 높고 자체 국내 유일 압력변이 부착되어 있다.
- 독일산 필터 소재를 사용한다.

- The only certified vacuum filter in Korea.
- It has high durability and chemical resistance against reactive gas.
- High exhuast efficiency and the only product in Korea with relief safety valves attached.
- German filter material is used.

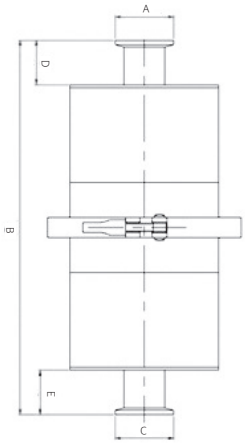

기술정보 / Technical Data

(Unit : mm)

Model	A	B	C	D	E
VOMT-S250	NW25(Ø40)	165.5	NW25(Ø40)	-	30
VOMT-S1000(25)	NW25(Ø40)	253	NW25(Ø40)	30	30
VOMT-S1000(40)	NW40(Ø55)	253	NW40(Ø55)	30	30
VOMT-S1500	NW40(Ø55)	338	NW40(Ø55)	30	30
VOMT-S2000	NW40(Ø55)	411	NW40(Ø55)	30	30
VOMT-SP250	NW25(Ø40)	150.5	NW25(Ø40)	-	30
VOMT-RS250	NW25(Ø40)	189	NW25(Ø40)	-	30
VOMT-250	NW25(Ø40)	155	NW25(Ø40)	-	-
VOMT-1000(25)	NW25(Ø40)	260.5	NW25(Ø40)	-	30
VOMT-1000(40)	NW40(Ø55)	260.5	NW40(Ø55)	30	30

TMF

TMF-12

TMF-36

TMF-90

제품 특징 / Overview

- 이중 필터링 시스템을 사용하여 완전하게 오일 속 유분을 제거한다.
- 작업 공간을 깨끗하게 유지할 수 있게 해준다.
- 펌프 내 오염 예방이 가능하며 펌프 오일의 손실을 막아준다.

- The double filtering system is used to completely remove oil.
- It helps to maintain a clean work place.
- It can prevent not only contamination inside the pump but also loss of pump oil.

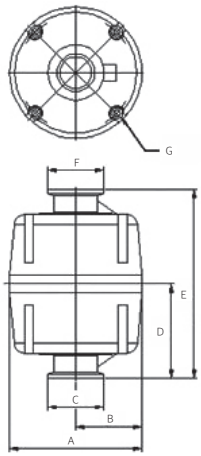

Dimension

(Unit : mm)

Model	A	B	C	D	E	F	G
TMF-12	Ø95	47.5	Ø40	68	136	Ø40	4-M8
TMF-36	Ø120	60	Ø40	83	188	Ø40	4-M8
TMF-90	Ø160	80	Ø55	105	210	Ø55	4-M8

Specification

(Unit : mm)

Model	A	B	Inlet port	Outlet port	Application
TMF-12	95	136	NW25	NW25	MVP-6, 12
TMF-36	120	166	NW25	NW25	MVP-24, 36
TMF-90	160	210	NW40	NW40	MVP-60, 90

OIL MIST TRAP

HDL

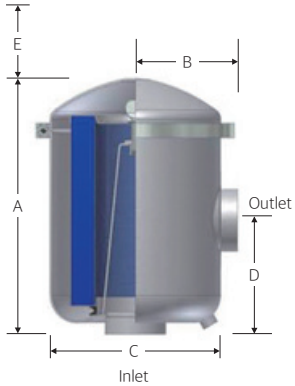

기술정보 / Technical Data

Inlet/Outlet	Displacement volume (m^3/hr)	Filter set model	Dimensions(mm)				Weight (kg)
			A	B	C	D	
1″	68	HDL-PSG848-101HC	171	105	186	117	2
1 1/4″	85	HDL-PSG848-126HC	171	105	186	117	2
1 1/2″	85	HDL-PSG848-151HC	171	105	186	117	2
2″	213	HDL-PSG850/1-201HC	286	117	222	127	7
2″	298	HDL-PSG860/1-201HC	445	117	222	127	14
2 1/2″	425	HDL-PSG244/2-251HC	358	185	346	182	16
3″	510	HDL-PSG344/2-301HC	567	185	346	182	18

•자동 드레인은 선택 가능. (Automatic drain is optional.)

HDS

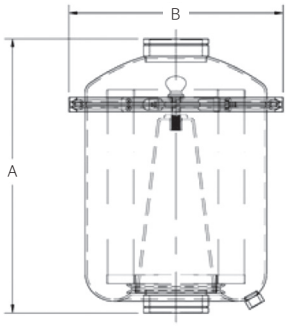

기술정보 / Technical Data

Model	Inlet/Outlet	Displacement volume (m^3/hr)	Dimensions(mm)		Weight (kg)
			A	B	
HDS-PSG850/1-201HC	2"	213	300	230	7
HDS-PSG860/1-201HC	2"	298	454	230	14
HDS-PSG244/2-301HC	3"	425	390	346	16
HDS-PSG344/2-301HC	3"	510	555	346	18

•자동 드레인은 선택 가능. (Automatic drain is optional.)

KF Flange

KF Blank


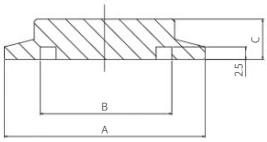

(Unit : mm)

Model	Material	A	B	C	Parts No.
KF16	304SS	30	17.2	8	BKF16
KF25	304SS	40	26.2	8	BKF25
KF40	304SS	55	41.2	8	BKF40
KF50	304SS	75	52.2	8	BKF50

KF Bored Blank


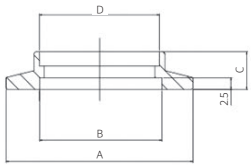

(Unit : mm)

Model	Material	A	B	C	D	Parts No.
KF16	304SS	30	17.2	8	19.2	BBK16
KF25	304SS	40	26.2	8	25.7	BBK25
KF40	304SS	55	41.2	8	38.5	BBK40
KF50	304SS	75	52.2	8	51	BBK50

KF Flang


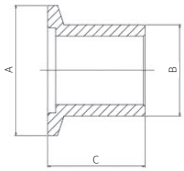

(Unit : mm)

Model	Material	A	B	C(Short)	C(Long)	Parts No.
KF16	304SS	30	20	20	40	HNK16
KF25	304SS	40	28	20	40	HNK25
KF40	304SS	55	45	20	40	HNK40
KF50	304SS	75	58	20	40	HNK50

KF 90˚ Elbow


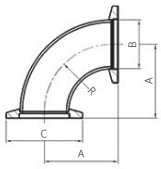

(Unit : mm)

Model	Material	A	B	C	R	Parts No.
KF16	304SS	32	19.05	30	28.5	EK16
KF25	304SS	38.5	25.4	40	35	EK25
KF40	304SS	53.5	38.1	55	50	EK40
KF50	304SS	63.5	50.8	75	60	EK50

KF Tee


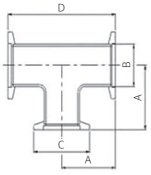

(Unit : mm)

Model	Material	A	B	C	D	Parts No.
KF16	304SS	32	19.05	34	64	TK16
KF25	304SS	38.5	25.4	40	77	TK25
KF40	304SS	53.5	38.1	55	107	TK25
KF50	304SS	63.5	50.8	75	127	TK50

KF Conical Reducer


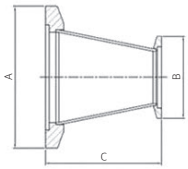

(Unit : mm)

Model	Material	A	B	C	Parts No.
KF25-16	304SS	40	30	57	CRK25-16
KF40-16	304SS	55	30	57	CRK40-16
KF40-25	304SS	55	40	74	CRK40-25
KF50-40	304SS	75	55	74	CRK50-40

CF Flange

CF Blank(Non Rotatable)

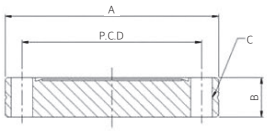

(Unit : mm)

Model	Material	A	B	C	P.C.D	Parts No.
CF1.33″	304SS	34	7.2	6×Ø4.5	27	BCF1.33
CF2.75″	304SS	69.5	12.7	6×Ø6.6	58.7	BCF2.75
CF3.375″	304SS	86	16	8×Ø8.6	72.4	BCF3.375
CF4.5″	304SS	113.5	17.5	8×Ø8.6	92.1	BCF4.5
CF6.0″	304SS	152	19.8	16×Ø8.6	130.2	BCF6.0
CF8.0″	304SS	203	22.2	20×Ø8.6	181	BCF8.0
CF10.0″	304SS	254	24.6	24×Ø8.6	231.8	BCF10.0

CF Blank(Rotatable)

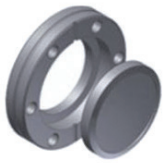

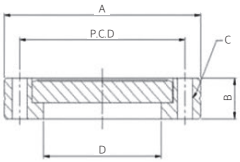

(Unit : mm)

Model	A	B	C	D	P.C.D	Parts No.
CF1.33″	34	7.2	6×Ø4.5	19.4	27	BCF1.33
CF2.75″	69.5	12.7	6×Ø6.6	39	58.7	BCF2.75
CF3.375″	86	16	8×Ø8.6	51.5	72.4	BCF3.375
CF4.5″	113.5	19	8×Ø8.6	64.5	92.1	BCF4.5
CF6.0″	152	19.8	16×Ø8.6	103	130.2	BCF6.0
CF8.0″	203	22.8	20xØ8.6	154	181	BCF8.0
CF10.0″	254	24.6	24xØ8.6	206	231.8	BCF10.0

CF Bored Blank(Non Rotatable)

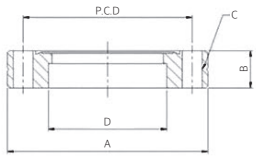

(Unit : mm)

Model	A	B	C	D	P.C.D	Parts No.
CF1.33″	34	7.2	6×Ø4.5	19.15	27	BBCF1.33
CF2.75″	69.5	12.7	6×Ø6.6	38.5	58.7	BBCF2.75
CF3.375″	86	16	8×Ø8.6	51	72.4	BBCF3.375
CF4.5″	113.5	17.5	8×Ø8.6	63.9	92.1	BBCF3.375
CF6.0″	152	19.8	16×Ø8.6	101.9	130.2	BBCF6.0
CF8.0″	203	22.2	20×Ø8.6	153	181	BBCF8.0
CF10.0″	254	24.6	24×Ø8.6	203.9	231.8	BBCF10.0

CF Bored Blank(Rotatable)

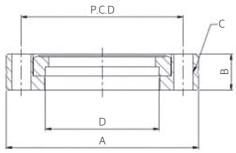

(Unit : mm)

Model	A	B	C	D	P.C.D	Parts No.
CF1.33″	34	7.2	6×Ø4.5	19.15	27	BBCR1.33
CF2.75″	69.5	12.7	6×Ø6.6	38.5	58.7	BBCR2.75
CF3.375″	86	16	8×Ø8.6	51	72.4	BBCR3.375
CF4.5″	113.5	19	8×Ø8.6	63.9	92.1	BBCR4.5
CF6.0″	152	19.8	16×Ø8.6	101.9	130.2	BBCR6.0
CF8.0″	203	23.8	20×Ø8.6	153	181	BBCR8.0
CF10.0″	254	24.6	24×Ø8.6	203.9	231.8	BBCR10.0

CF Half Nipple(Non Rotatable)

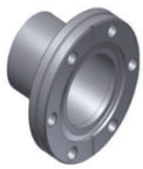

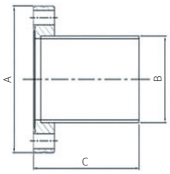

(Unit : mm)

Model	Material	A	B	C	Parts No.
CF1.33″	304SS	34	19.05	40	HNCF1.33
CF2.75″	304SS	69.5	38.1	60	HNCF2.75
CF3.375″	304SS	86	50.8	80	HNCF3.375
CF4.5″	304SS	113.5	63.5	100	HNCF4.5
CF6.0″	304SS	152	101.6	120	HNCF6.0

CF Half Nipple(Rotatable)

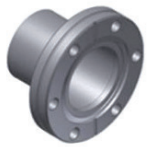

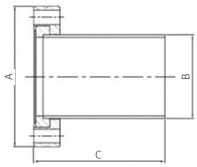

(Unit : mm)

Model	Material	A	B	C	Parts No.
CF1.33″	304SS	34	19.05	40	HNCR1.33
CF2.75″	304SS	69.5	38.1	60	HNCR2.75
CF3.375″	304SS	86	50.8	80	HNCR3.375
CF4.5″	304SS	113.5	63.5	100	HNCR4.5
CF6.0″	304SS	152	101.6	120	HNCR6.0

CF 90˚ Elbow(Non Rotatable)

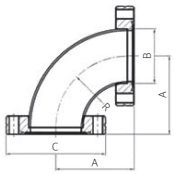

(Unit : mm)

Model	Material	A	B	C	R	Parts No.
CF1.33″	304SS	31.2	19.05	34	28.5	ECF1.33
CF2.75″	304SS	54.7	38.1	69.5	50	ECF2.75
CF3.375″	304SS	65.6	50.8	80	60	ECF3.375
CF4.5″	304SS	86.6	63.5	86	79	ECF4.5
CF6.0″	304SS	137.7	101.6	152	130	ECF6.0

CF 90˚ Elbow(Rotatable)

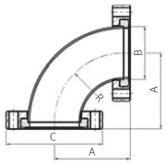

(Unit : mm)

Model	Material	A	B	C	R	Parts No.
CF1.33″	304SS	31.2	19.05	34	28.5	ECR1.33
CF2.75″	304SS	54.7	38.1	69.5	50	ECR2.75
CF3.375″	304SS	65.6	50.8	86	60	ECR3.375
CF4.5″	304SS	86.6	63.5	113.5	79	ECR4.5
CF6.0″	304SS	137.7	101.6	152	130	ECR6.0

CF Tee(Non Rotatable)

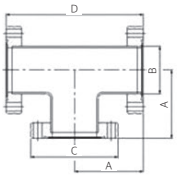

(Unit : mm)

Model	Material	A	B	C	D	Parts No.
CF1.33″	304SS	31.2	19.05	34	62.4	TCF1.33
CF2.75″	304SS	54.7	38.1	69.5	109.4	TCF2.75
CF3.375″	304SS	65.6	50.8	86	131.2	TCF3.375
CF4.5″	304SS	86.6	63.5	113.5	173.2	TCF4.5
CF6.0″	304SS	137.7	101.6	152	275.4	TCF6.0

CF Tee(Rotatable)

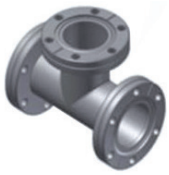

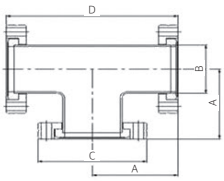

(Unit : mm)

Model	Material	A	B	C	D	Parts No.
CF1.33″	304SS	31.2	19.05	34.6	62.4	TCR1.33
CF2.75″	304SS	54.7	38.1	69.5	109.4	TCR2.75
CF3.375″	304SS	65.6	50.8	86	131.2	TCR3.375
CF4.5″	304SS	86.6	63.5	113.5	173.2	TCR4.5
CF6.0″	304SS	137.7	101.6	152	275.4	TCR6.0

CF 4-Way Cross(Non Rotatable)

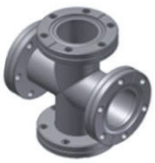

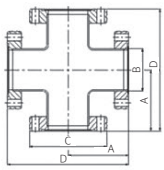

(Unit : mm)

Model	Material	A	B	C	D	Parts No.
CF1.33″	304SS	31.2	19.05	34	62.4	CCF1.33
CF2.75″	304SS	54.7	38.1	69	109.4	CCF2.75
CF3.375″	304SS	65.6	50.8	86	131.2	CCF3.375
CF4.5″	304SS	86.6	63.5	113.5	173.2	CCF4.5
CF6.0″	304SS	137.7	101.6	152	275.4	CCF6.0

CF 4-Way Cross(Rotatable)

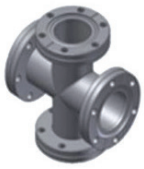

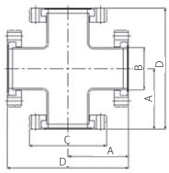

(Unit : mm)

Model	Material	A	B	C	Parts No.
CF1.33″	304SS	31.2	19.05	34	CCR1.33
CF2.75″	304SS	54.7	38.1	69	CCR2.75
CF3.375″	304SS	65.6	50.8	86	CCR3.375
CF4.5″	304SS	86.6	63.5	113.5	CCR4.5
CF6.0″	304SS	137.7	101.6	152	CCR6.0

ISO Flange

ISO Half Nipple

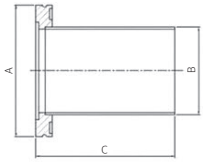

(Unit : mm)

Model	Material	A	B	C	Parts No.
ISO63	304SS	95	19.05	63.5	HNS63
ISO80	304SS	110	25.4	76.3	HNS80
ISO100	304SS	130	38.1	101.6	HNS100

ISO 90˚ Elbow

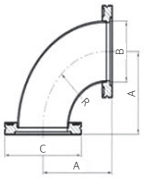

(Unit : mm)

Model	Material	A	B	C	R	Parts No.
ISO63	304SS	86	63.5	95	79	ES63
ISO80	304SS	89	76.3	110	82	ES80
ISO100	304SS	137	101.6	130	130	ES100

ISO Tee

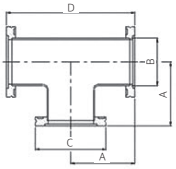

(Unit : mm)

Model	Material	A	B	C	D	Parts No.
ISO63	304SS	86	63.5	95	172	TS63
ISO80	304SS	89	76.3	110	178	TS80
ISO100	304SS	137	101.6	130	274	TS100

ISO 4-Way Cross

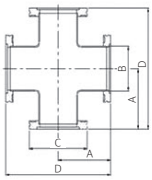

(Unit : mm)

Model	Material	A	B	C	D	Parts No.
ISO63	304SS	86	63.5	95	172	CS63
ISO80	304SS	89	76.3	110	178	CS80
ISO100	304SS	137	101.6	130	274	CS100

ISO Conical Reducer

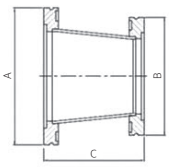

(Unit : mm)

Model	Material	A	B	C	Parts No.
ISO80-ISO63	304SS	110	95	81	CRS80-63
ISO100-ISO63	304SS	130	95	117	CRS100-63
ISO100-ISO80	304SS	130	110	117	CRS100-80

Clamp & Centering

Clamp

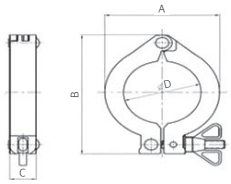

(Unit : mm)

Model	Material	A	B	C	D	Parts No.
NW16	Aluminium	45	63	16	23	CL16
NW25	Aluminium	55	72	16	33	CL25
NW40	Aluminium	70	90	16	47	CL40
NW50	Aluminium	90	114	20	62	CL50

Double Wall Clamp

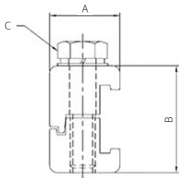

(Unit : mm)

Model	Material	A	B	C	D	Parts No.
ISO63	Aluminium	24	40	M8	4	DWCL M8
ISO80					4	
ISO100					4	
ISO125	Aluminium	28	43	M10	4	DWCL M10
ISO160					4	
ISO200					6	
ISO250					6	
ISO320	Aluminium	34	55	M12	8	DWCL M12
ISO400					8	
ISO500					12	

Centering

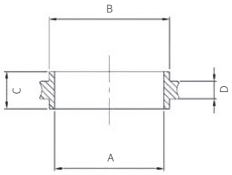

(Unit : mm)

Model	Material	A	B	C	D	O-ring	Parts No.
NW16	SUS304	15	17	8	3.8	AS-311	CR16
NW25	SUS304	23.5	26	8	3.8	AS-314	CR25
NW40	SUS304	38.5	41	8	3.8	AS-320	CR40
NW50	SUS304	50	52	8	3.8	AS-326	CR50
ISO63	SUS304	67	70	8	3.8	AS-330	CR63
ISO80	SUS304	80	83	8	3.8	AS-341	CR80
ISO100	SUS304	100	101.8	8	3.8	AS-347	CR100
ISO125	SUS304	125	127	8	3.9	AS-362	CR125
ISO160	SUS304	150	152.6	8	3.9	AS-371	CR160
ISO200	SUS304	210	212.6	8	3.9	AS-378	CR200
ISO250	SUS304	257.5	256.7	8	3.9	AS-461	CR250
ISO320	SUS304	312	318.3	12	5.6	AS-461	CR320
ISO400	SUS304	394	399.2	12	5.6	AS-369	CR400

Single Wall Clamp

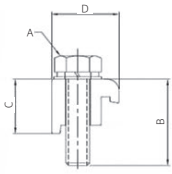

(Unit : mm)

Model	Material	A	B	C	D	Parts No.
ISO63~100	Aluminium	M8	35	23.5	24.2	SWCL M8
ISO125~250	Aluminium	M10	35	23.5	27.3	SWCL M10
ISO320~500	Aluminium	M12	50	30	34	SWCL M12

Bellows

KF Bellows

(Unit : mm)

Model	ID	OD	L	ØD
NW16KF	20	29	16	30
NW25KF	25	36	16	40
NW40KF	38	54	16	55
NW50KF	50	68	16	75
NW63KF	66	87	20	95
NW80KF	78	101	20	114
NW100KF	100	126	20	134
NW125KF	125	150	20	160
NW160KF	149	175	20	190

ISO-K Bellows

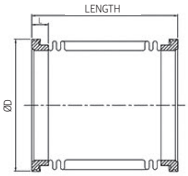

(Unit : mm)

Model	ID	OD	L	ØD
ISO-K63	66	87	23	95
ISO-K80	78	101	23	110
ISO-K100	100	126	23	130
ISO-K125	125	150	23	155
ISO-K160	149	175	23	180
ISO-K200	200	235	23	240
ISO-K250	250	293	23	290
ISO-K320	300	345	28	370

Angle Valve

Angle Valves(Manually Operated)

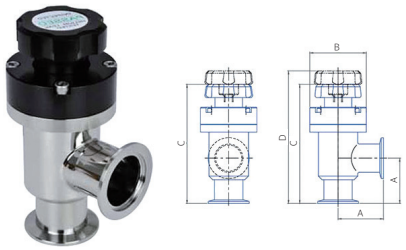

(Unit : mm)

Model	Port Type	Stroke	A	B	C	D
M②K-016-A	NW16KF	14	54.6	Ø58.0	141.5	155.5
M②K-025-A	NW25KF	14	51.6	Ø58.0	136.5	150.5
M②K-040-A	NW40KF	18	61	Ø76.0	160.5	178.5
M②K-050M	NW50KF	25	86.4	Ø89.0	190.5	215.5

- "②"샤프트 씰타입 : "S" 오링 씰, "B" AM350 벨로우즈 씰, "L" SUS316L 벨로우즈 인코넬, 하스텔로이 C®를 비롯한 기타 기종을 고객 프로세스에 맞게 제공 가능.
- "②"Shaft Seal Type : "S" O-ring Seal, "B" AM350 Welded Bellows Seal, "L" SUS316L Welded Bellows,Inconel, Hastelloy C® and others are available according to customer process.

Angle Valves(Pneumatically Actuated)

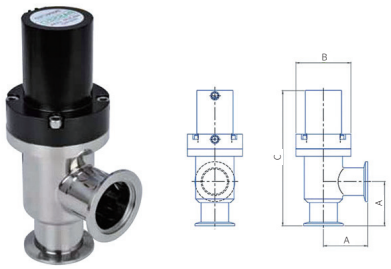

(Unit : mm)

Model	Operation	Port Type	Stroke	A	B	C	Air Fitting
P②K-016-A⑥	Double Acting	NW16KF	14	54.6	Ø58.0	154	1/8″PT
S②K-016-A⑥	Single Acting(N.C)						
P②K-025-A⑥	Double Acting	NW25KF	14	51.6	Ø58.0	149	
S②K-025-A⑥	Single Acting(N.C)						
P②K-040-A⑥	Double Acting	NW40KF	18	61	Ø76.0	187	
S②K-040-A⑥	Single Acting(N.C)						
P②K-050-A⑥	Double Acting	NW50KF	25	86.4	Ø89.0	227	
S②K-050-A⑥	Single Acting(N.C)						

- "②"샤프트 씰타입 : "S" 오링 씰, "B" AM350 벨로우즈 씰, "L" SUS316L 벨로우즈 인코넬, 하스텔로이 C®를 비롯한 기타 기종을 고객 프로세스에 맞게 제공 가능.
- "⑥"위치센서 : "Z" 없음, "S" 단일 센서, "D" 이중 센서. 다른 사양 또한 제공 가능.
- "②"Shaft Seal Type : "S" O-ring Seal, "B" AM350 Welded Bellows Seal, "L" SUS316L Welded Bellows,Inconel, Hastelloy C® and others are available according to customer process.
- "⑥"Position Sensor : "Z" None, "S" single senser, "D" Dual Sensor. Other Specification is available.

Right-Angle Valves(Manually Operated)

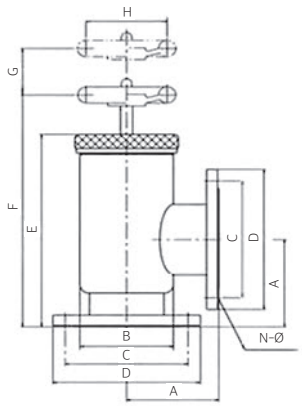

(Unit : mm)

Model	A	B	C	D	E	F	G	H	N-Ø	Weight(kg)
LV-1M	55	48.6	70	90	98.5	124	20	66	4-10	1.5
LV-2M	75	76.5	100	120	134	159.5	30	66	4-10	3.4
LV-3M	95	114.3	135	160	187	226.5	45	123	4-12	7.8
LV-4M	110	139.8	160	185	212	251.5	58	123	8-12	11.5
LV-6M	130	216.3	210	235	286	326.5	85	142	8-12	21.5
LV-8M	175	267.4	270	300	371	454	115	225	8-15	45.2
LV-10M	200	318	320	350	529	605	180	225	12-15	60.5
LV-14M	260	406	420	450	738	805	230	250	12-15	106
LV-18M	350	510	535	575	738	-	-	-	16-19	243
LV-22M	450	612	640	680	830	-	-	-	16-19	298
LV-26M	450	690	750	800	940	-	-	-	20-23	425

Right-Angle Valves(Pneumatically Actuated)

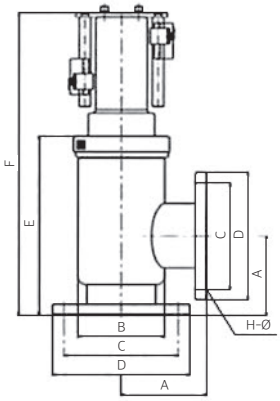

(Unit : mm)

Model	A	B	C	D	E	F	Air inlet port	Weight(kg)
LV-1A	55	48.6	70	90	98.5	169.5	PT⅛	1.6
LV-2A	75	76.5	100	120	134	218.5	PT⅛	3.8
LV-3A	95	114.3	135	160	187	283	PT⅜	8.6
LV-4A	110	139.8	160	185	212	333	PT⅜	13.2
LV-6A	130	216.3	210	235	286	449	PT½	30.5
LV-8A	175	267.4	270	300	371	649	PT½	54
LV-10A	200	318	320	350	419	657	PT½	70
LV-14A	260	406	420	450	529	822	PT½	118
LV-18A	350	510	535	575	700	1210	PT½	229
LV-22A	450	612	640	680	830	1490	PT½	281
LV-26A	450	690	750	800	930	1715	PT½	415

Y-Shape Inline Valves(Manually Operated)

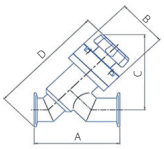

(Unit : mm)

Model	Port Type	Stroke	A	B	C	D
M②K-016-Y	NW16KF	14	101.6	Ø58.0	105.5	142
M②K-025-Y	NW25KF	14	106.7	Ø58.0	106.5	147
M②K-040-Y	NW40KF	18	130	Ø76.0	125	180
M②K-050-Y	NW50KF	25	177.8	Ø89.0	137.5	209

- "②"샤프트 씰타입 : "S" 오링 씰, "B" AM350 벨로우즈 씰, "L" SUS316L 벨로우즈 인코넬, 하스텔로이 C®를 비롯한 기타 기종을 고객 프로세스에 맞게 제공 가능.
- "②"Shaft Seal Type : "S" O-ring Seal, "B" AM350 Welded Bellows Seal, "L" SUS316L Welded Bellows,Inconel, Hastelloy C® and others are available according to customer process.

Y-Shape Inline Valves(Pneumatically Actuated)

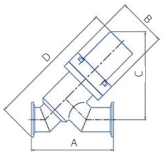

(Unit : mm)

Model	Operation	Port Type	Stroke	A	B	C	Air Fitting
P②K-016-Y⑥	Double Acting	NW16KF	14	101.6	Ø58.0	108	1/8″PT
S②K-016-Y⑥	Single Acting(N.C)						
P②K-025-Y⑥	Double Acting	NW25KF	14	106.76	Ø58.0	107	
S②K-025-Y⑥	Single Acting(N.C)						
P②K-040-Y⑥	Double Acting	NW40KF	18	130	Ø76.0	139.5	
S②K-040-Y⑥	Single Acting(N.C)						
P②K-050-Y⑥	Double Acting	NW50KF	25	177.8	Ø89.0	163.5	
S②K-050-Y⑥	Single Acting(N.C)						

- "②"샤프트 씰타입 : "S" 오링 씰, "B" AM350 벨로우즈 씰, "L" SUS316L 벨로우즈 인코넬, 하스텔로이 C®를 비롯한 기타 기종을 고객 프로세스에 맞게 제공 가능.
- "⑥"위치센서 : "Z" 없음, "S" 단일 센서, "D" 이중 센서. 다른 사양 또한 제공 가능.
- "②"Shaft Seal Type : "S" O-ring Seal, "B" AM350 Welded Bellows Seal, "L" SUS316L Welded Bellows,Inconel, Hastelloy C® and others are available according to customer process.
- "⑥"Position Sensor : "Z" None, "S" single senser, "D" Dual Sensor. Other Specification is available.

Gate Valve

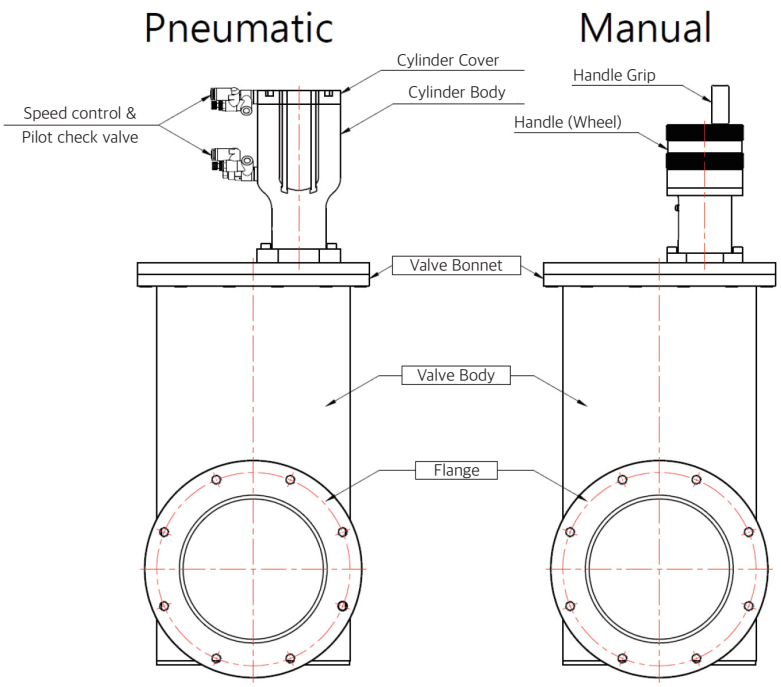

Gate Valve Specification

Port Size	40, 63, 100, 160(150), 200, 250, 320(300)	
Port Flange	ISO-F, ISO-CF, JIS-VF	
Actuation	Pneumatic & Manual	
Materials	Body	304 Stainless steel
	Seal plate (DISK)	304 Stainless steel
	Actuator	Aluminum (Anodized)
	DISK Seal (O- ring)	FKM (Note-1)
	Bonnet Seal	FKM (Metal gasket or Note-1)
Bellows	Material	Standard / AM350 Stainless steel
	Type	Welded Metal Bellows
Leak rate	Under 1×10^{-9} Pa·M^3 /sec (He)	
Differential pressure	Max. 1 bar across valve disk	
Operating temperature vacuum side	Under 150℃	
Operating temperature actuator side	5℃ ~ 70℃	
Actuator	Pneumatic	Double Acting cylinder & w/pilot check valve
	Manual	Handle wheel
Required CDA pressure	0.5 ~ 0.7 Mpa	
CDA connection port size	Rc1/8″ ~ Rc 1/2″(PT)	
Mounting Position	Any direction	
Life cycle	100,000 Cycles	
Position sensor	Auto switch / (DC24V / 5~50mA)	

• 제작 가능 2.75″ ~ 16″ (Production available for 2.75″~16″)
• 주문 제작 가능 16″ ~ 30″ (Customization available for 16″~30″)

VS

진공펌프 전용 오일 / Vacuum Pump Oil

탁월한 슬러지, 탄화물 형성 억제 낮은 증발량과 우수한 도달진공도
Excellent suppression on sludge, carbide production. Low evaporation rate and exceptional ultimate vacuum.

VS-100

- 뛰어난 윤활성과 우수한 내 마모성을 갖고 있다.
- 소형, 중형 오일로터리 펌프에 사용된다.
- 동절기 소형 오일로터리 펌프에 사용된다.
- 중진공, 고진공 영역에서 사용된다.

- It has excellent lubrication and wear resistance.
- Suitable for small and medium oil rotary pumps.
- Suitable for small oil rotary pump in winter.
- Can be used for medium and high vacuum.

VS-200

- 낮은 증발량 및 우수한 도달 진공도를 갖고 있다.
- 소형, 중형, 대형 오일로터리 펌프에 사용된다.
- 슬러지 또는 탄화물 생성을 억제시켜 준다.
- 중진공, 고진공 영역에서 사용된다.

- It has low evaporation rate and excellent ultimate vacuum.
- Suitable for small, medium, and large oil rotary pumps.
- Inhibits the production of sludge or carbide.
- Can be used for medium and high vacuum.

Rotary Pump Oil

Item / Product name	Density 15℃(59℉) g/cm³	Flash point ℃(℉)	Kinematic viscosity 40℃(104℉) cSt	Pour Point ℃(℉)	Color (ASTM)	Emulsion Character-Istics	Thermal Stability 170℃	Vapor Pressure 50℃ (122℉) Pa(Torr)
VS-100	0.83	250	ISO 32	-12	L1.0	40×40×0(Under5)	Passed	Under1×10^{-3}
VS-200	0.86	258	ISO 68	-15	L1.0	40×40×0(Under5)	Passed	Under1×10^{-3}
NEOVAC MR-100	0.878	230(446)	44.6	-17.5(0.5)	L0.5	40×40×0(Under5)	Passed	1×10^{-4}
NEOVAC MR-200	0.883	256(493)	73.6	-17.5(0.5)	L0.5	40×40×0(Under5)	Passed	1×10^{-5}
LION L-1000	0.882	252	100.7	-10	2	40×40×0(Under5)	Passed	Under1×10^{-3}
OPTIMUM32	0.86	224	37.6	-20	L0.5	40×40×0(Under5)	Passed	Under1×10^{-3}
FOMBLIN 06/6	at 20℃ 1.88	-	at 20℃ 64	-50	Clear	-	Passed	Under1×10^{-6}
FOMBLIN 14/6	at 20℃ 1.89	-	at 20℃ 148	-45	Clear	-	Passed	Under1×10^{-7}
FOMBLIN 16/6	at 20℃ 1.89	-	at 20℃ 168	-45	Clear	-	Passed	Under1×10^{-6}
FOMBLIN 25/6	at 20℃ 1.90	-	at 20℃ 276	-35	Clear	-	Passed	Under1×10^{-8}
MOLYVACUUM5000	-	266	ISO 100	-18	Clear	-	Passed	Under1×10^{-3}

Diffusion Pump Oil

Item / Product name	Density 15℃(59℉) g/cm³	Flash Point ℃(℉)	Kinematic Viscosity 40℃(104℉) cSt	Color (ASTM)	Vapor Pressure 25℃ (77℉)Torr	Ultimate Pressure Torr	Working Temperature ℃(℉)
NEOVAC SX	0.931	250(482)	22	L0.5	1×10^{-8}	1×10^{-7}	170-210(338-410)
NEOVAC SY	0.928	260(500)	25	L0.5	1×10^{-8}	1×10^{-8}	180-235(356-445)
LION L-A	0.908	220	38	4	5×10^{-7}	1×10^{-7}	-
LION L-S	0.9	225	38	4	5×10^{-9}	1×10^{-9}	-
DOWCOOM OC702	1.079	193	at 25℃ 45	Clear	5×10^{-8}	1×10^{-8}	-
DOWCOOM OC704	1.07	221	39	Clear	5×10^{-9}~ 5×10^{-10}	1×10^{-9} ~ 1×10^{-10}	-
DOWCOOM OC705	1.09	243	175	Clear	5×10^{-11}~ 5×10^{-12}	1×10^{-11} ~ 1×10^{-12}	-

Mechanical Booster Oil

Item / Product name	Density 15℃(59℉) g/cm³	Flash Point ℃(℉)	Kinematic Viscosity 40℃(104℉) cSt	Pour Point ℃(℉)	Color (ASTM)	Vapor Pressure 25℃ (77℉) Torr	Thermal Stabilty 170℃(338℉)×24hr
NEOVAC EP-83	0.885	250(482)	83	-15.0(5.0)	L1.0	1×10^{-9}	Passed
HIREN 100	at 20℃ 0.8719	282	100	-12.5	-	Under 1×10^{-4}	-

vacsco co.,ltd.

HEAD OFFICE
충청북도 청주시 서원구 남이면 남이외천1길 102-15 (28185)
102-15, Namioecheon 1-gil, Nami-myeon, Seowon-gu,
Cheongju-si, Chungcheongbuk-do, 28185, Rep. of KOREA
TEL : +82-43-260-4310~2 FAX : +82-43-260-4313
http://www.vacsco.com E-mail : sales@vacsco.com

SEOUL OFFICE
서울특별시 구로구 구로중앙로 198, 27-123 (구로기계공구상가 D블록) (08212)
Room D-block 27-123, 198, Gurojungang-ro, Guro-gu, Seoul, 08212, Rep. of KOREA
TEL : +82-2-2675-3073 FAX : +82-2-2631-5207

Edited & published in 2021. 11.