CHAIN SPECIFICATIONS

HANKUK CHAIN

HEAD OFFICE & FACTORY
177, Kunji-Ri, Daeduk-Myun, Ansung-Si,
Kyungki-Do, Republic of Korea
Tel) + 82-31) 673-5544 ~7
Fax) +82-31) 676-1738, 676-1079
Home Page : www.hanchain.co.kr
Email) master@hanchain.co.kr

BUSAN OFFICE
842-1, Mora 1-dong, Sasang-Gu,
busan, Republic of Korea
Tel) + 82-51) 304-0583
Fax) +82-51) 304-0584
Home Page : www.hanchain.co.kr
Email) master@hanchain.co.kr

Introduction

HC Standard Roller Chains (P.14~15)

HC Standard Accessories-Links(P.16~17)

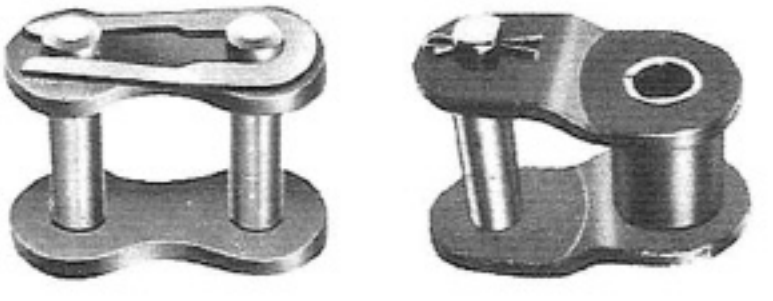

HC Conveyor Roller Chains (P.20)

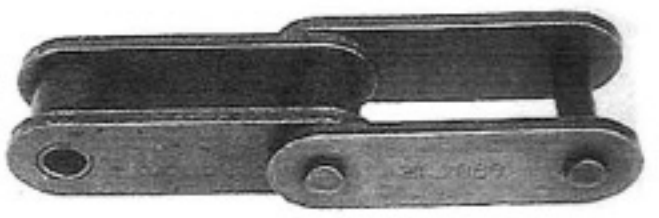

HC Leaf Chains (P.42~43)

HC Transmission Double Pitch Roller Chains (P.21)

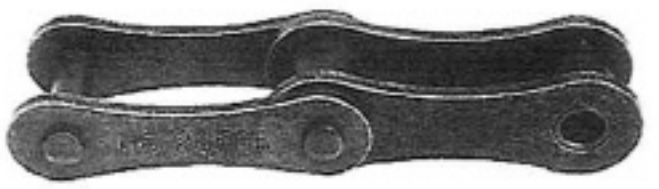

HC Heavy Series Roller Chains (P.34)

HC Standard Attachment Chains (P.22~23)

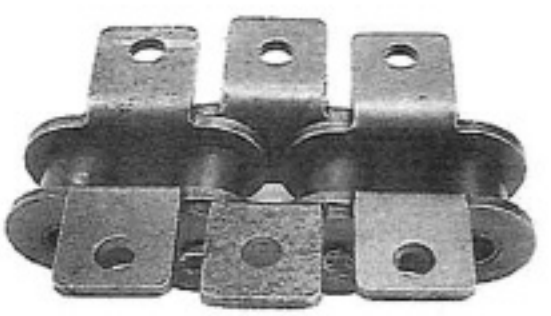

HC Double Pitch Attachment Chains (P.24~25)

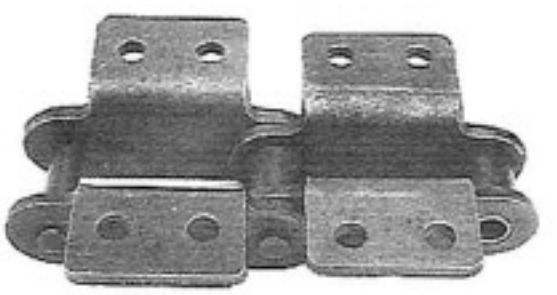

HC BS Chains

■Double Strands

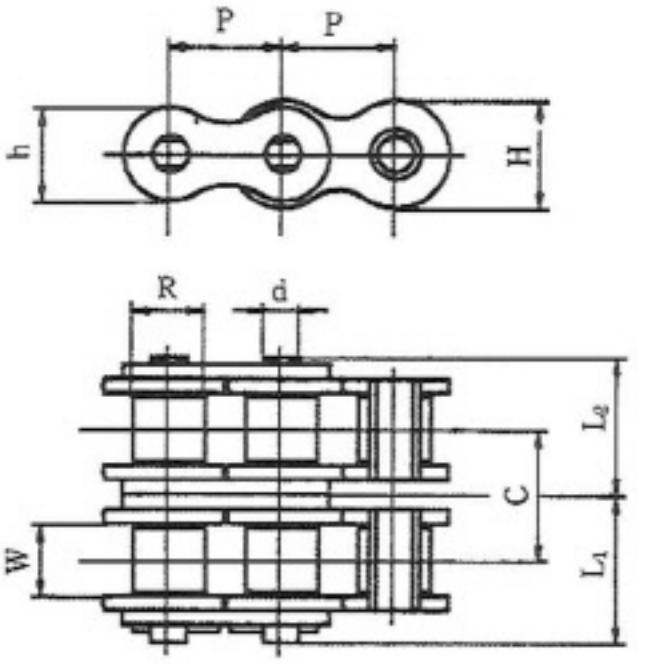

Dimension:mm

HC Chain No.	Pitch P	Inside Width W (Min)	Roller Dia R (Max)	Pin				Link Plate				Traverse Pitch C	Average Ultimate Strength (kg.f)	Bearing Area (cm^2)	Average Weight (kg/m)
				Dia d (Max)	Length L_1	Length L_2	Overall Dimensions L_1+L_2	T	t	H	h				
HC06B−2	9.525	5.72	6.35	3.28	11.25	12.55	23.80	1.3	1.3	8.26	8.26	10.24	1.730	0.56	0.78
HC08B−2	12.7	7.75	8.51	4.45	15.50	16.40	31.90	1.5	1.5	11.81	10.92	13.92	3.180	1.01	1.35
HC10B−2	15.875	9.65	10.16	5.08	18.10	19.0	37.10	10.5	1.5	14.73	13.72	16.59	4.540	1.34	1.35
HC12B−2	19.05	11.68	12.07	5.72	21.10	21.90	43.00	1.8	1.8	16.13	16.13	19.46	5.900	1.79	2.50
HC16B−2	25.4	17.02	15.88	8.28	34.0	36.80	70.80	4.0	3.0	21.08	21.08	31.88	8.620	4.21	5.40
HC20B−2	31.75	19.56	19.05	10.19	39.40	42.40	81.80	4.5	3.5	26.42	26.42	36.45	13.160	5.91	7.20
HC24B−2	38.1	25.4	25.4	14.63	51.60	56.0	107.60	6.0	5.0	33.4	33.4	48.36	19.960	11.09	13.50
HC28B−2	44.45	30.99	27.94	15.9	62.85	67.15	130.00	7.0	6.0	37.08	37.08	59.56	26.320	14.79	16.60
HC32B−2	50.8	30.99	29.21	17.81	62.25	68.35	130.60	7.0	6.0	42.29	42.29	58.55	34.480	16.21	21.0
HC40B−2	63.5	38.1	39.37	22.89	76.55	89.75	166.30	8.0	8.0	52.96	52.96	72.29	53.540	25.50	32.0
HC48B−2	76.2	45.72	48.26	29.24	95.95	115.35	211.30	12.0	10.0	63.88	63.88	91.21	81.650	41.23	50.0
HC56B−2	88.9	53.34	53.98	34.32	111.50	132.10	243.60	13.0	12.0	77.85	77.85	106.60	110.680	55.80	70.0
HC64B−2	101.6	60.96	63.5	39.4	125.70	149.20	274.90	14.0	13.0	90.17	90.17	119.89	145.150	72.50	120.0
HC72B−2	114.3	68.58	72.39	44.48	142.55	166.75	309.30	17.0	15.0	103.63	103.63	136.27	183.260	92.40	160.0

HC Double Pitch Roller Chains(For Conveyor)

■ S-Roller Type Chains(Standard, NP, SS, AS)

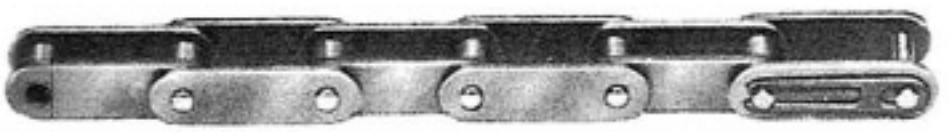

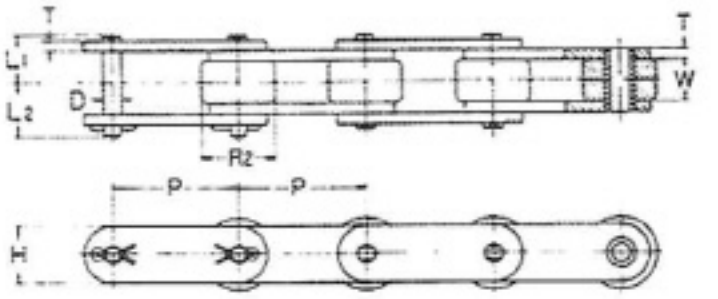

Dimension: mm

HC Chain No.	Pitch P	Inside Width W	Roller Dia R1	Pin			Link Plate		Standard	NP	SS	AS	Average Weight (kg/m)
				L_1	L_2	Dia	Height H	Thickness T	Average Ultimate Strength	Maximum Allowable Strength(kg.f)			
HC 2040(S)	25.40	7.95	7.94	8.25	9.65	3.97	12.0	1.5	1,920	270	45	70	0.51
HC 2050(S)	31.75	9.53	10.16	10.3	11.9	5.09	15.0	2.0	3,200	440	70	105	0.84
HC 2060(S)	38.10	12.70	11.91	14.6	16.4	5.96	17.2	3.2	4,400	640	105	160	1.51
HC 2080(S)	50.80	15.88	15.88	17.8	21.1	7.94	23.0	4.0	7,500	1,090	180	270	2.66
HC 2100(S)	63.50	19.05	19.05	21.4	24.5	9.54	28.6	4.8	11,500	1,740	260	–	3.99
HC 2120(S)	76.20	25.40	22.23	26.6	30.6	11.11	34.4	5.6	15,600	2,440	–	–	5.35
HC 2160(S)	101.60	31.75	28.58	33.55	38.55	14.29	48.2	7.15	26,300	4,170	–	–	9.42

■ R-Roller Type Chains(Standard, NP, SS, AS)

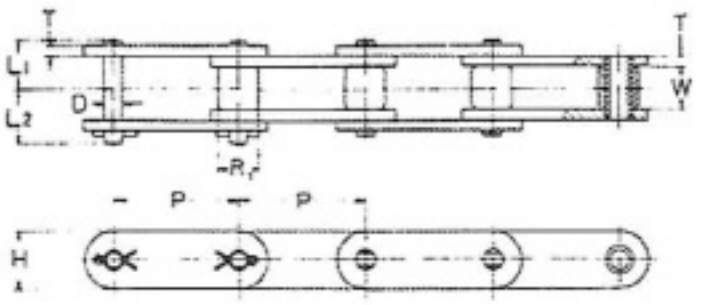

Dimension: mm

HC Chain No.	Pitch P	Inside Width W	Roller Dia R2	Pin			Link Plate		Standard	NP	SS	AS	Average Weight (kg/m)
				L_1	L_2	D	Height H	Thickness T	Average Ultimate Strength	Maximum Allowable Strength(kg.f)			
HC 2042(R)	25.40	7.95	15.88	8.25	9.65	3.97	12.0	1.5	1,920	270	45	70	0.87
HC 2052(R)	31.75	9.53	19.05	10.3	11.9	5.09	15.0	2.0	3,200	440	70	105	1.30
HC 2062(R)	38.10	12.70	22.23	14.6	16.4	5.96	17.2	3.2	4,400	640	105	160	2.19
HC 2082(R)	50.80	15.88	28.58	17.8	21.1	7.94	23.0	4.0	7,500	1,090	180	270	3.68
HC 2102(R)	63.50	19.05	39.69	21.4	24.5	9.54	28.6	4.8	11,500	1,740	260	–	6.30
HC 2122(R)	76.20	25.40	44.45	26.6	30.6	11.11	34.4	5.6	15,600	2,440	–	–	8.60
HC 2162(R)	101.60	31.75	57.15	33.55	38.55	14.29	48.2	7.15	26,300	4,170	–	–	11.79

Note : ① NP : Nickel Plated Chain ② SS : Stainless Steel Chain ③ AS : Heavy Duty Stainless Steel Chain

HC Double Pitch Roller Chains(For Transmission)

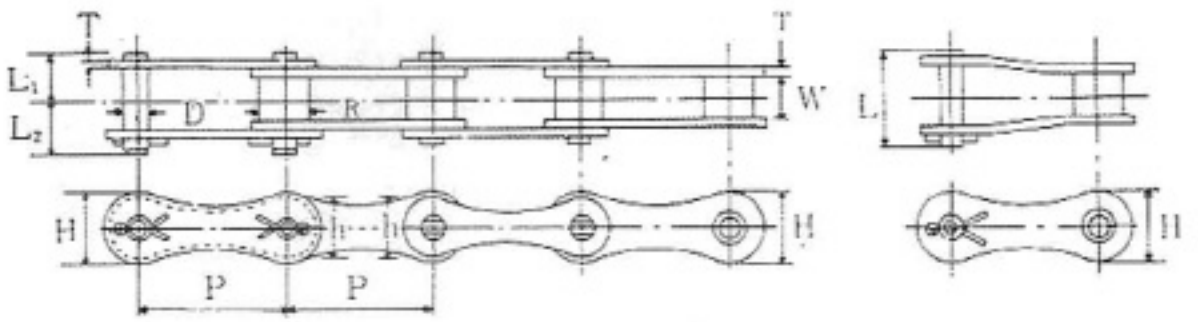

■ Dimensions

Dimension:mm

HC Chain No.	Pitch P	Roller Dia R	Inside Width W	Link Plate			Pin					Average T.S. (kg)	Max. Allowable Strength	Average Weight (kg/m)
				T	H	h	D	L_1	L_2	L	Type of Pin			
HC 2040A	25.40	7.94	7.95	1.5	12.0	10.4	3.97	8.25	9.65	18.0	Rivet	1.920	270	0.38
HC 2050A	31.75	10.16	9.53	2.0	15.0	12.7	5.09	10.3	11.9	22.5	〃	3.200	440	0.63
HC 2060A	38.10	11.91	12.70	2.4	18.0	15.2	5.96	12.85	15.25	28.2	〃	4,400	640	0.94
HC 2080A	50.80	15.88	15.88	3.2	23.0	19.6	7.94	16.25	19.25	36.0	〃	7,500	1,090	1.54

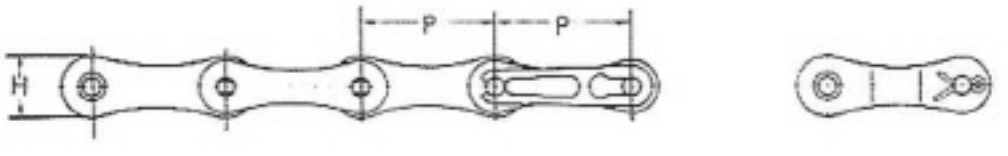

HC Standard Attachment Chains

■ Standard, NP, SS, AS)

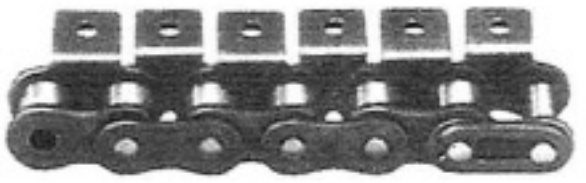

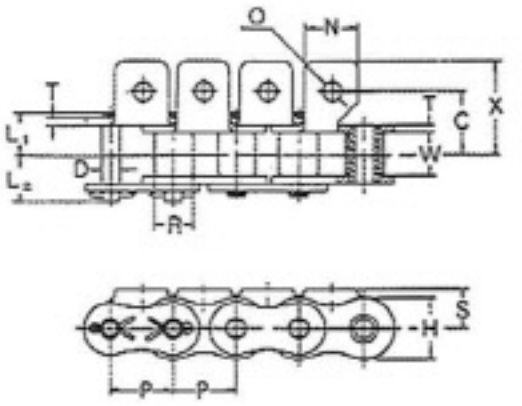

A-1 Attachment

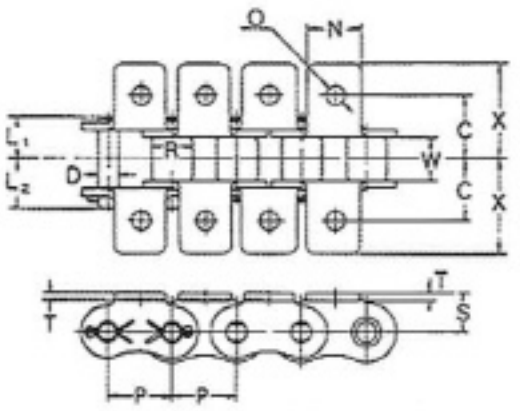

K-1 Attachment

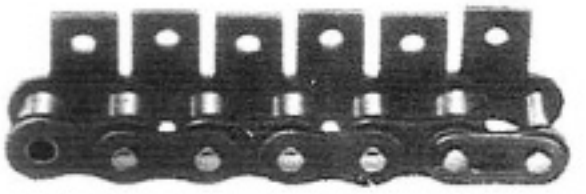

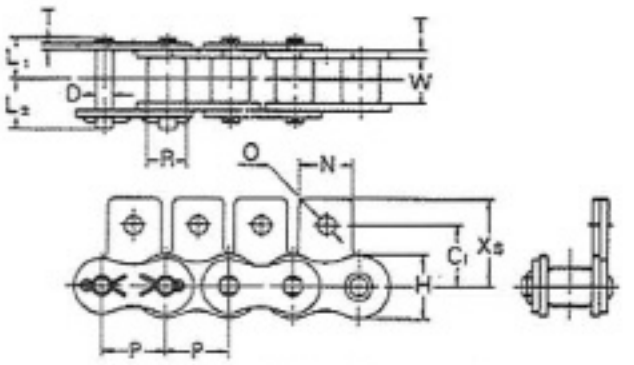

SA-1 Attachment

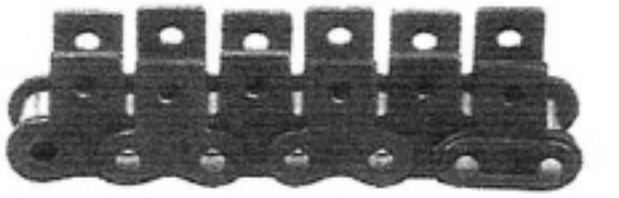

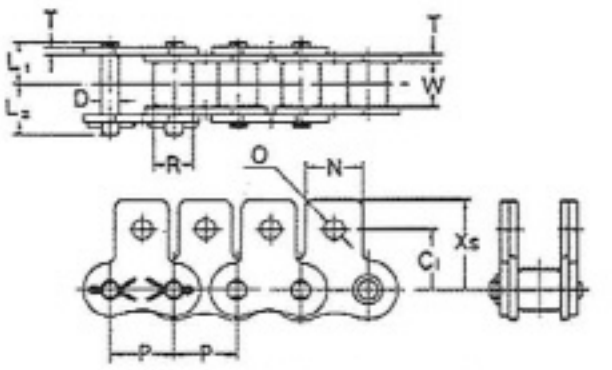

SK-1 Attachment

Dimension: mm

HC Chain No.	Pitch	Inside Width W	Roller Dia R1	Pin			Link Plate		Standard NP		SS	AS	Average Weight (kg/m)
				Dia D	L_1	L_2	H	T	Average Ultimate Strength(kg.f)	Maximum Allowable Strength(kg)	Max Allowable Load(kg.f)		
HC 40	12.70	7.95	7.94	3.97	8.25	9.95	12.0	1.5	1.700	270	45	70	0.64
HC 50	15.875	9.53	10.16	5.09	10.3	12.00	15.0	2.0	2.800	440	70	105	1.04
HC 60	19.05	12.70	11.91	5.96	12.85	15.25	18.1	2.4	4.100	640	105	160	1.53
HC 80	25.40	15.88	15.88	7.94	16.25	19.25	24.1	3.2	7.000	1.090	180	270	2.66
HC 100	31.75	19.05	19.05	9.54	19.75	22.85	30.2	4.0	11.000	1.740	260	–	3.99
HC 120	38.10	25.40	22.23	11.11	24.9	28.9	36.2	4.8	15.400	2.440	390	–	5.93
HC 140	44.45	25.4	25.40	12.71	26.9	31.7	42.2	5.6	20.500	3.300	470	–	7.49
HC 160	50.80	31.75	28.58	14.29	31.85	36.85	48.2	6.4	26.300	4.170	650	–	10.10

HC Chain No	Attachment									Additional Weight ATT'(kg)	
	C	C1	N	O	S	X	Xs	L_3	L_4	A.SA Attachment	K.SK Attachment
HC 40	12.7	12.7	9.5	3.6	8.0	17.8	17.40	9.5	16.8	0.002	0.004
HC 50	15.9	15.9	12.7	5.2	10.3	23.4	23.05	11.9	21.0	0.003	0.006
HC 60	19.05	18.3	15.9	5.2	11.9	28.2	26.85	14.3	25.85	0.007	0.014
HC 80	25.4	24.6	19.1	6.8	15.9	36.6	35.45	19.1	33.9	0.013	0.026
HC 100	31.75	31.8	25.4	8.7	19.8	44.9	44.00	23.8	41.85	0.026	0.052
HC 120	38.1	36.5	28.6	10.3	23.0	55.8	52.85	28.6	51.4	0.044	0.088
HC 140	44.5	44.5	34.9	11.9	28.6	63.1	63.50	33.3	57.5	0.071	0.142
HC 160	50.8	50.8	38.1	14.3	31.8	71.7	70.10	38.1	67.4	0.097	0.194

HC Standard Attachment Chains

D-1 Attachment

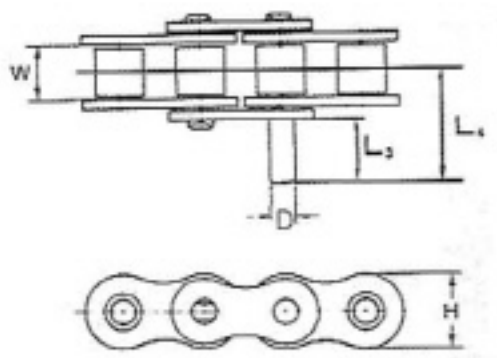

D-3 Attachment

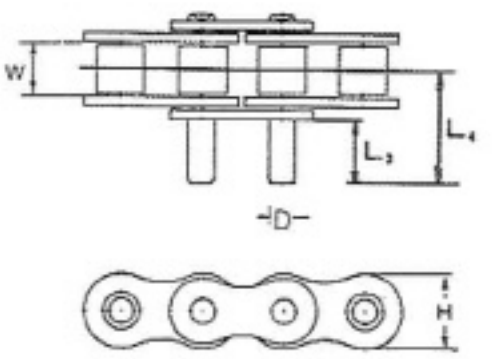

Dimension:mm

HC Chain No.	Piitch P	Inside Width W	Roller Dia R	Pin				Link Plate		Standard	NP	SS	AS	Additional Weight of ATT	
				D	L_1	L_3	L_4	H	T	Average Ultimate Strength(kg)	Maximum Allowable Load(kg.f)			D-1 (kg)	D-3 (kg)
HC 40	12.70	7.95	7.94	3.97	8.25	9.5	16.8	12.0	1.5	1.920	270	45	70	0.0008	0.0016
HC 50	15.875	9.53	10.16	5.09	10.3	11.9	21.0	15.0	2.0	3.200	440	70	105	0.0017	0.0034
HC 60	19.05	12.70	11.91	5.96	12.85	14.3	25.85	18.1	2.4	4.400	640	105	160	0.003	0.006
HC 80	25.40	15.88	15.88	7.94	16.25	19.1	33.9	24.1	3.2	7.500	1.090	180	270	0.007	0.014
HC 100	31.75	19.05	19.05	9.54	19.75	23.8	41.85	30.1	4.0	11.500	1.740	260	–	0.012	0.024
HC 120	38.10	25.40	22.23	11.11	24.9	28.6	51.4	36.2	4.8	15.600	2.440	390	–	0.020	0.040
HC 140	44.45	21.40	25.40	12.71	26.9	33.3	57.5	42.2	5.6	20.500	3.300	470	–	0.030	0.060
HC 160	50.80	31.75	28.58	14.29	31.85	38.1	67.4	48.2	6.4	26.300	4.170	650	–	0.044	0.088

WA-2 Attachment

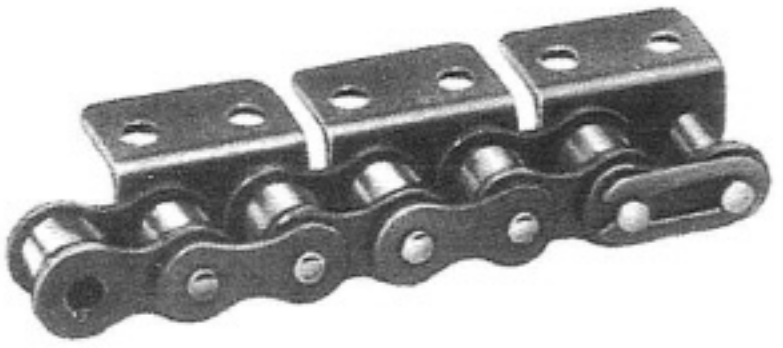

WK-1 Attachment

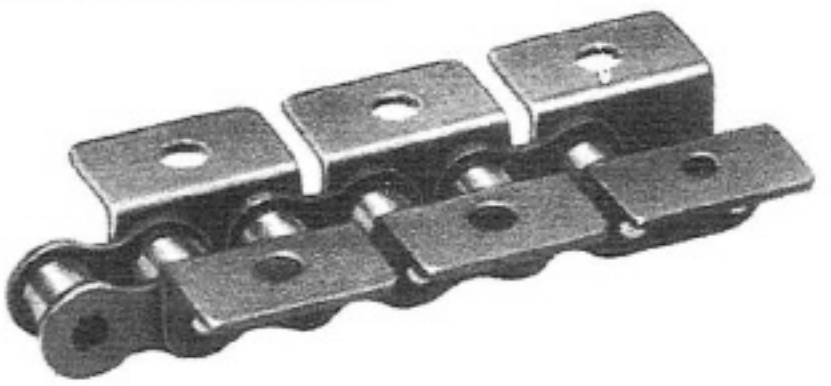

WSA-1 Attachment

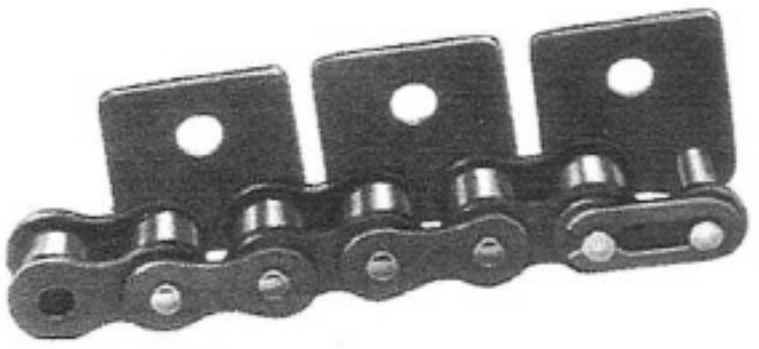

WSK-2 Attachment

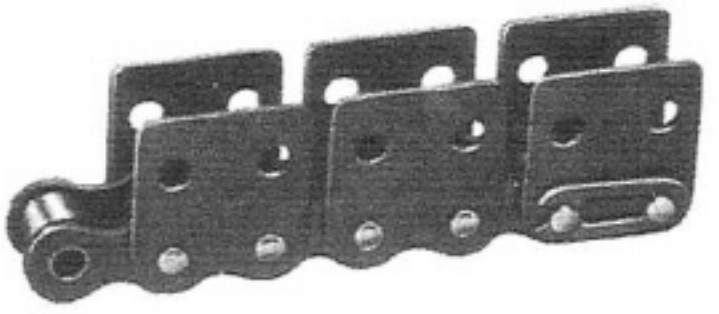

HC Double Pitch Attachment Chains

- A-1 Attachment

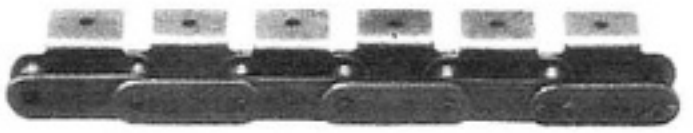

- A-2 Attachment

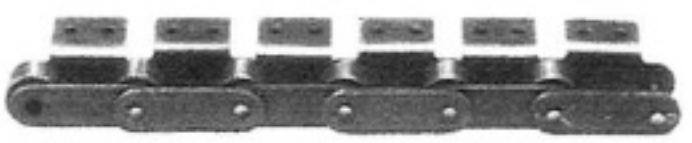

- K-1 Attachment

- K-2 Attachment

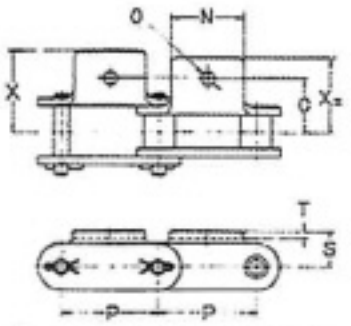

A-1 Attachment

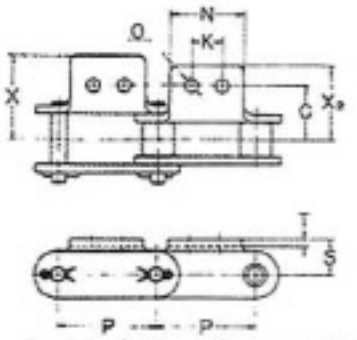

A-2 Attachment

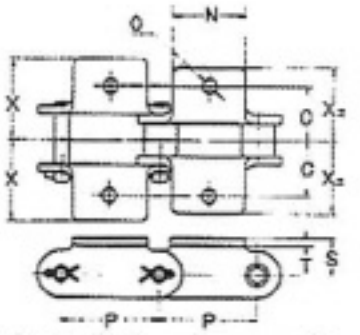

K-1 Attachment

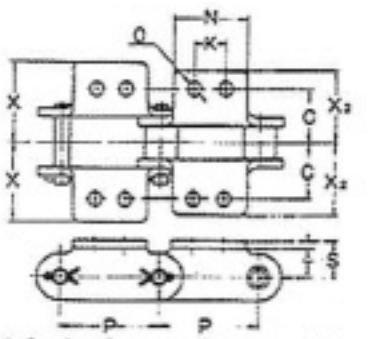

K-2 Attachment

- SA-1 Attachment

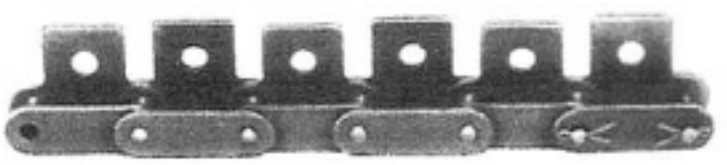

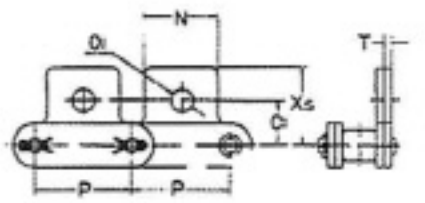

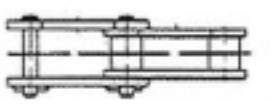

- SK-1 Attachment

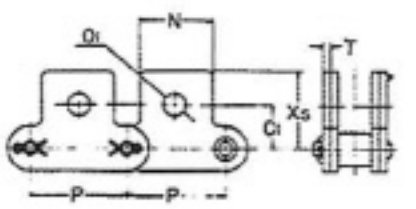

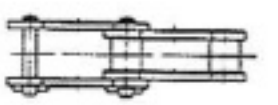

- SA-2 Attachment

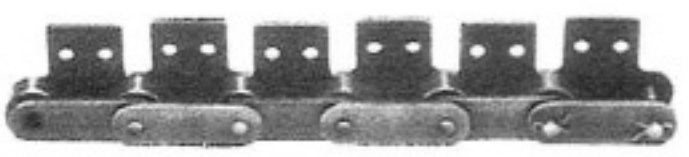

- SK-2 Attachment

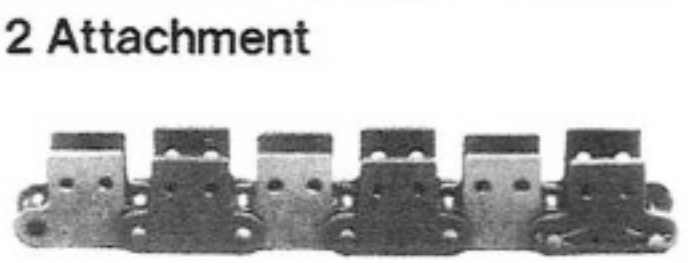

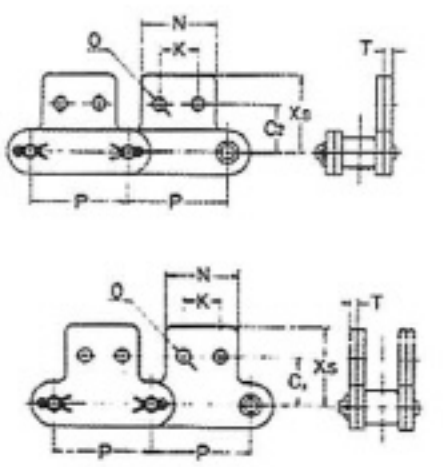

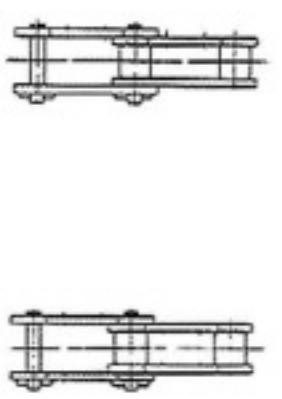

Dimension: mm

HC Chain No.		Pitch P	C	C1	C2	K	N	O	O1	S	T	X	X_2	X_S	Additional Weight of ATT(kg)	
															A. SA ATT.	K. SK ATT.
HC2040(S)	HC2042(R)	25.40	12.7	11.1	13.6	9.5	19.1	3.6	5.2	9.1	1.5	19.3	17.6	19.8	0.003	0.006
HC2050(S)	HC2052(R)	31.75	15.9	14.3	15.9	11.9	23.8	5.2	6.8	11.1	2.0	24.2	22.0	24.6	0.006	0.012
HC2060(S)	HC2062(R)	38.10	21.45	17.5	19.1	14.3	28.6	5.2	8.7	14.7	3.2	31.5	28.2	30.6	0.017	0.034
HC2080(S)	HC2082(R)	50.80	27.8	22.2	25.4	19.1	38.1	6.8	10.3	19.1	4.0	40.7	36.6	40.5	0.037	0.074
HC2100(S)	HC2102(R)	63.50	33.35	28.6	31.8	23.8	47.6	8.7	14.3	23.4	4.8	49.9	44.9	50.4	0.067	0.134
HC2120(S)	HC2122(R)	76.20	39.7	33.3	37.3	28.6	57.2	14	16	27.8	5.6	60.7	54.4	59.9	0.100	0.200
HC2160(S)	HC2162(R)	101.60	52.4	44.5	50.8	38.1	76.2	18	22	36.5	7.15	77.8	70.0	78.6	0.213	0.426

HC Double Pitch Attachment Chains

● D-1 Attachment

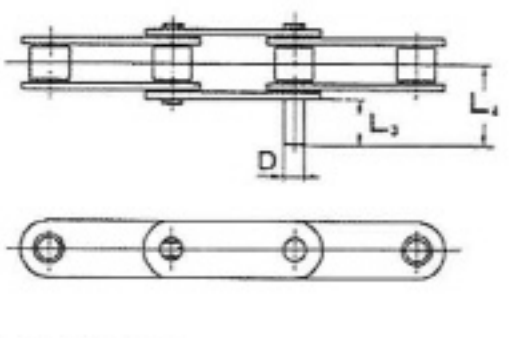

● D-3 Attachment

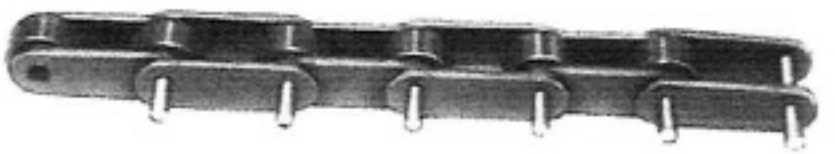

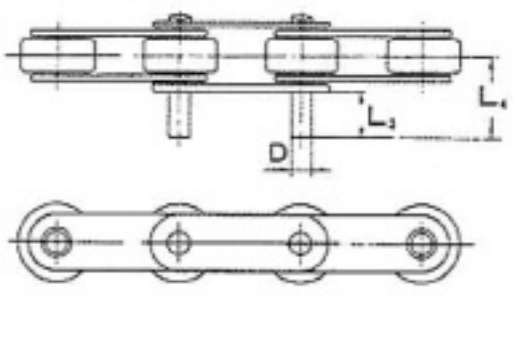

● G- Attachment

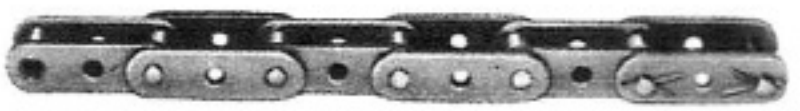

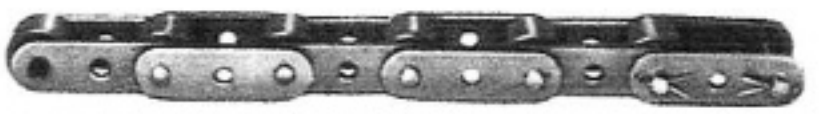

S- Roller Type

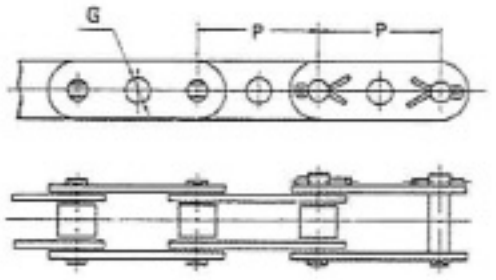

R- Roller Type

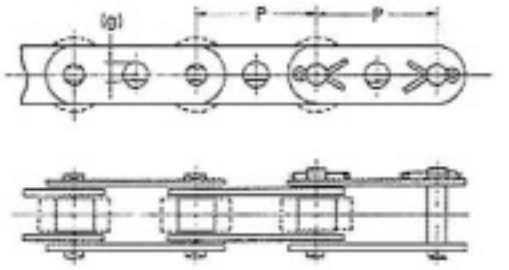

Dimension:mm

HC Chain No.		Pitch P	D-Attachment		G-Attachmdnt			Additional Weight of ATT(kg)		
			L_3	L_4		G(g)			D-1	D-3
HC2040(S)	HC2042(R)	25.40	9.52	16.6	4.1	5.1	6.1	6.5(4.5)	0.0008	0.0017
HC2050(S)	HC2052(R)	31.75	11.91	20.9	5.1(4.1)	6.1	6.5	8.1(7.1)	0.0017	0.0034
HC2060(S)	HC2062(R)	38.10	14.27	27.2	6.1(5.1)	8.1(7.1)	–	–	0.003	0.006
HC2080(S)	HC2082(R)	50.80	19.05	35.25	8.1	8.4(7.0)	12.1(10.3)	–	0.007	0.014
HC2100(S)	HC2102(R)	63.50	23.83	43.3	–	–	–	–	0.012	0.024
HC2120(S)	HC2122(R)	76.2	28.58	52.85	–	–	–	–	0.020	0.040
HC2160(S)	HC2162(R)	101.60	–	–	–	–	–	–	–	–

HC Hollow Pin Chains

■ Standard Roller Chain Types

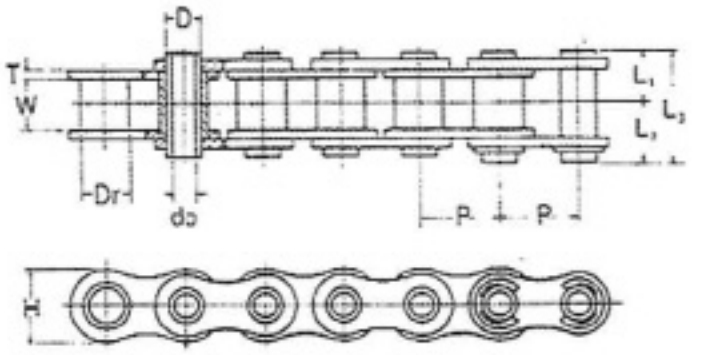

Dimension: mm

HC Chain No.	Pitch P	Inside Width W	Bushing Dia Dr	Pin						Link Plate		Average Ultimate Strength (kg. f)	Max Allowable Load (kg. f)	Average Weight (kg/m)
				Out Dia d	Minimum Inside Dia do	L_1	L_2	$2L_1$	L_3	Thickness T	Height H			
HC 40 HP	12.70	7.95	7.95	5.68	4.00	8.1	9.4	16.2	17.5	1.5	11.7	1,100	180	0.51
HC 50 HP	15.875	9.53	10.16	7.24	5.12	10.3	11.7	20.6	22.0	2.0	14.6	2,000	320	0.83
HC 60 HP	19.05	12.70	11.91	8.37	5.99	12.9	14.3	25.8	27.2	2.4	17.5	2,700	430	1.24
HC 80 HP	25.40	15.88	15.88	11.24	8.02	16.3	17.8	32.6	34.1	3.2	23.0	4,900	780	2.32

■ Double Pitch Roller Chain Types

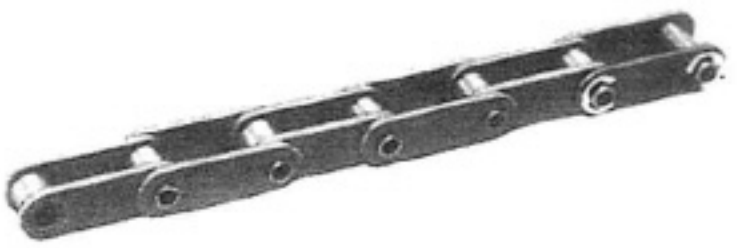

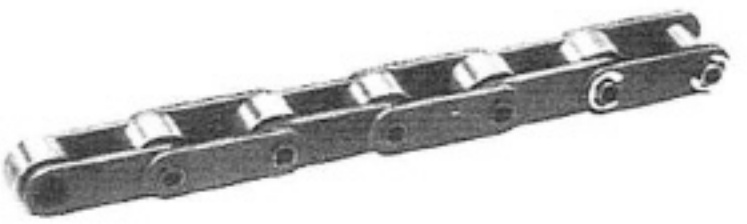

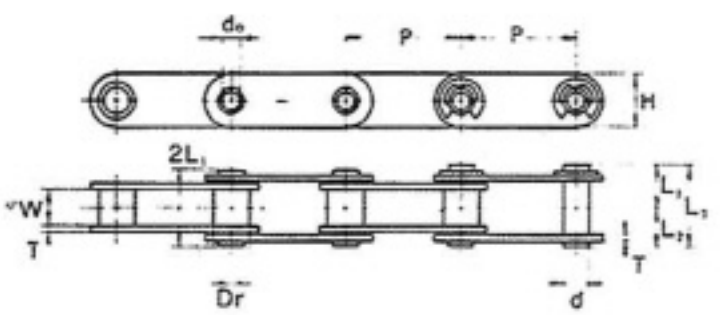

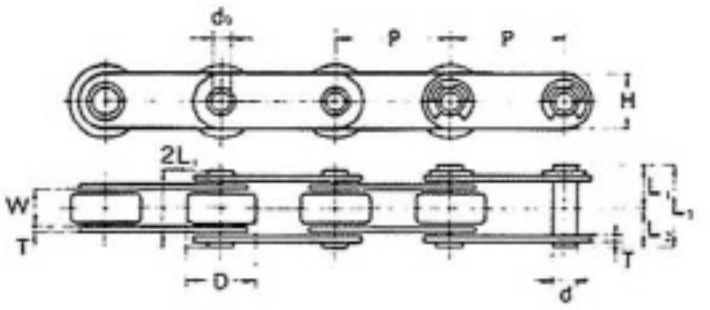

Dimension: mm

HC Chain No.	Pitch P	Inside Width W	Bushing Dia Dr	Pin						Link Plate		Average Ultimate Strength (kg. f)	Max Allowable Load (kg. f)	Average Weight (kg/m)
				Out Dia d	Minimum Inside Dia do	L_1	L_2	$2L_1$	L_3	Thickness T	Height H			
HC2040HP	25.40	7.95	7.95	5.68	4. 0	8.1	9.4	16.2	17.5	1.5	11.7	1,100	180	0.46
HC2042HP			15.88											0.80
HC2050HP	31.75	9.53	10.16	7.24	5.12	10.3	11.7	20.6	22.0	2.0	14.6	2,000	320	0.76
HC2052HP			19.05											1.25
HC2060HP	38.10	12.70	11.91	8.37	5.99	12.9	14.3	25.8	27.2	2.4	17.5	2,700	430	1.12
HC2062HP			22.23											1.79
HC2080HP	50.80	15.88	15.88	11.24	8.02	16.3	17.8	32.6	34.1	3.2	23.0	4,900	780	1.98
HC2082HP			28.58											3.17

HC Nickel Plated Chains

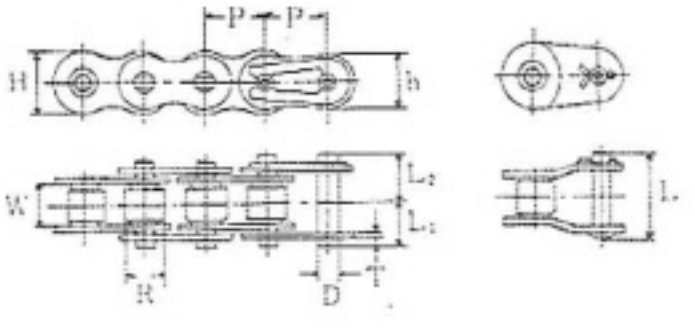

■ Dimensions

Dimension:mm

HC Chain No.	Numbers Matching To KS	Pitch P	Roller Dia R	Inside Width W	Link Plate			Pin				Pin Types	Average Ultimate Strength (kg.f)	Max Allowable Load(kg)	Average Weight (kg/m)
					T	H	h	D	L_1	L_2	L				
HC 25 NP	25	6.35	(3.30)	3.18	0.75	5.84	5.05	2.31	3.8	4.8	7.6	Rivet	460	65	0.14
HC 35 NP	35	9.525	(5.08)	4.78	1.25	9.0	7.8	3.59	5.85	6.85	13.5	〃	1.150	160	0.33
HC 40 NP	40	12.70	7.94	7.95	1.5	12.0	10.4	3.97	8.25	9.95	18.0	〃	1,920	300	0.64
HC 50 NP	50	15.875	10.16	9.53	2.0	15.0	13.0	5.09	10.3	12.0	22.5	〃	3,200	520	1.04
HC 60 NP	60	19.05	11.91	12.70	2.4	18.1	15.6	5.96	12.85	15.25	28.2	〃	4,400	740	1.53
HC 80 NP	80	25.40	15.88	15.88	3.2	24.1	20.8	7.94	16.27	19.25	36.0	〃	7,500	1,300	2.66
HC 100 NP	100	31.75	19.05	19.05	4.0	30.1	26.0	9.54	19.75	22.85	44.4	Cotter	11.500	1.880	3.99
HC 120 NP	120	38.10	22.23	25.40	4.8	36.2	31.2	11.11	24.9	28.9	45.4	〃	15,600	2,380	5.93

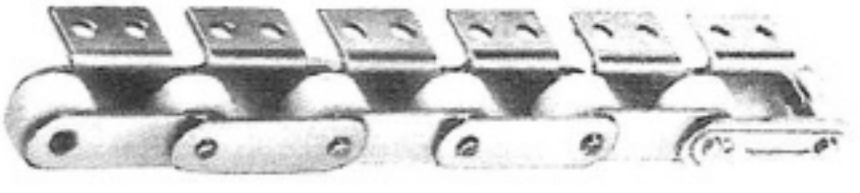

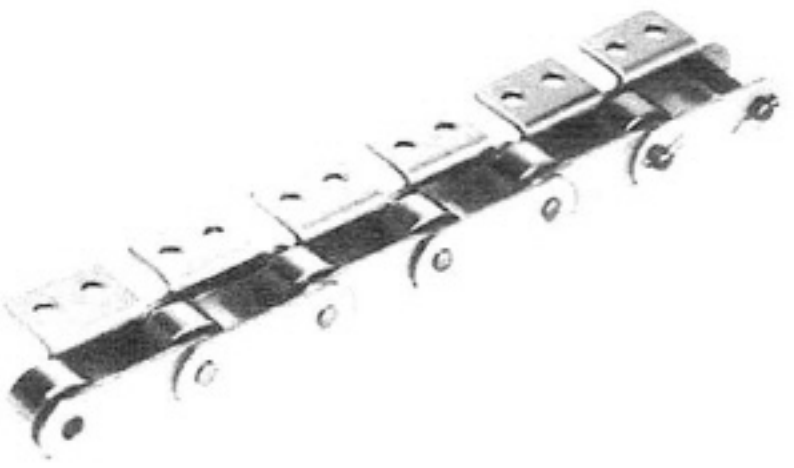

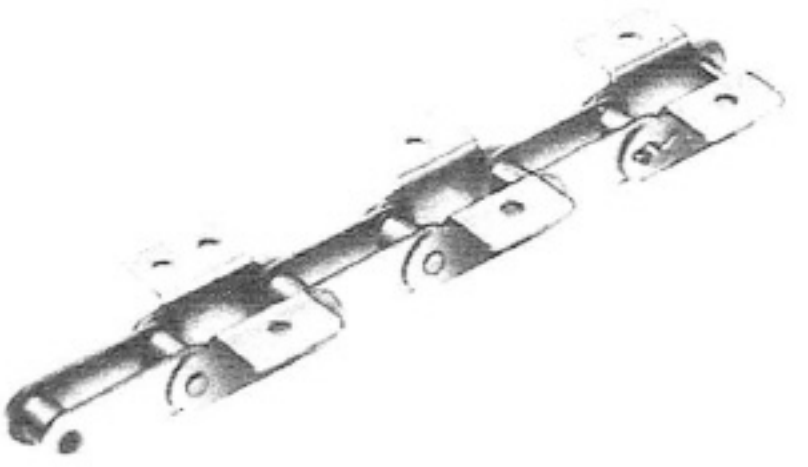

HC Stainless Roller Chains

■ Standard Stainless Roller Chains

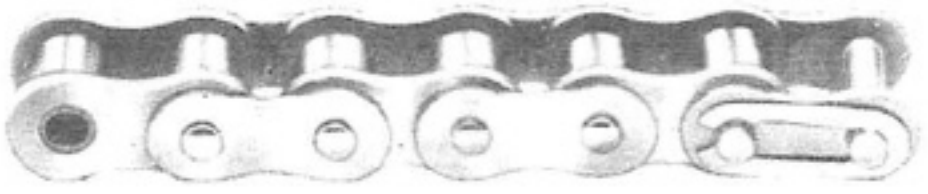

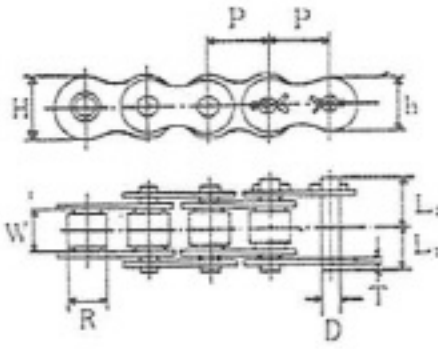

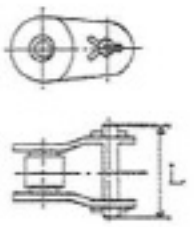

- Characteristics
- ■ Anti-Corrosion
- ■ Heat-Resistance
- ■ Magnetism

Dimension:mm

HC Chain No.	Pitch	Roller Dia R	Inside Width W	Link Plate			Pin					Max Allowable Load(kg)	Average Weight (kg/m)
				T	H	h	D	L_1+L_2	L_1	L_2	L		
HC 25 SS	6.35	(3.30)	3.18	0.75	5.84	5.05	2.31	8.6	3.8	4.8	7.6	12	0.14
HC 35 SS	9.525	(5.08)	4.78	1.25	9.0	7.8	3.59	13.2	6.05	7.15	14.7	12	0.14
HC 40 SS	12.70	7.94	7.95	1.5	12.0	10.4	3.97	17.9	8.25	9.65	18.6	45	0.64
HC 50 SS	15.875	10.16	9.53	2.0	15.0	13.0	5.09	22.2	10.3	11.9	23.9	70	1.04
HC 60 SS	19.05	11.91	12.70	2.4	18.1	15.6	5.96	28.1	12.85	15.25	29.4	105	1.53
HC 80 SS	25.40	15.88	15.88	3.2	24.1	20.8	7.94	35.7	16.2	19.5	39.0	180	2.66

■ Double Pitch Stainless Roller Chains

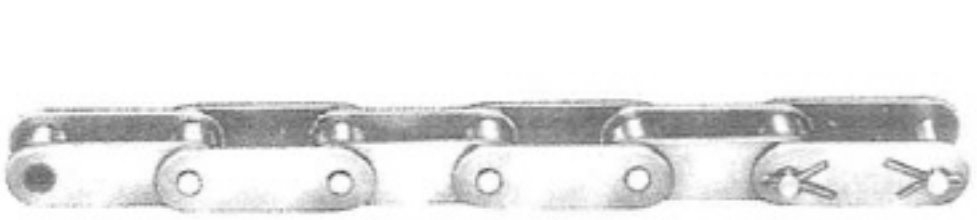

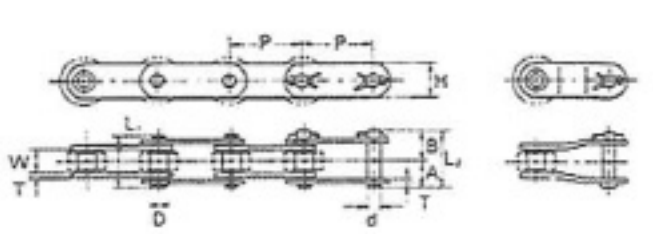

Dimension:mm

HC Chain No.	Pitch P	Inside Width W	Roller Dia R	Pin						Link Plate		Max Allowable Load(kg)	Average Weight (kg/m)
				Dia d	A	B	(A+A) L_1	(A+B) L_2	Offset Pin L	Thickness T	Height H		
HC2040 SS HC2042 SS	25.40	7.95	7.95 15.88	3.97	8.07	10.28	16.15	18.35	19.05	1.5	11.7	45	0.49 0.83
HC2050 SS HC2052 SS	31.75	9.53	10.16 19.05	5.09	10.17	12.13	20.35	22.3	23.05	2.0	14.6	70	0.83 1.28
HC2060 SS HC2062 SS	38.10	12.70	11.91 22.23	5.96	12.7	15.4	25.4	28.1	29.55	2.4	17.5	105	1.19 1.88
HC2060HSS HC2062HSS	38.10	12.70	11.91 22.23	5.96	14.35	17.05	28.7	31.4	32.85	3.2	17.5	110	1.46 2.14
HC2080 SS HC2082 SS	50.80	15.88	15.88 28.58	7.94	16.15	19.25	32.3	35.4	37.1	3.2	23.0	180	2.08 3.13
HC2080HSS HC2082HSS	50.80	15.88	15.88 28.58	7.94	17.8	20.9	35.6	38.7	40.4	4.0	23.0	190	2.44 3.50

Introduction

HC Nickel Plated Roller Chains (P.27)

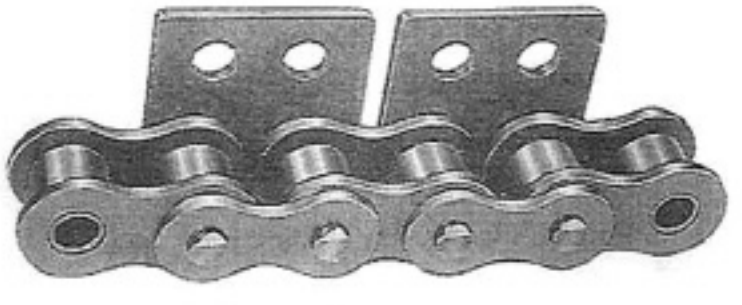

HC Top-Roller Chains (P.30~31)

HC Stainless Roller Chains (P.28)

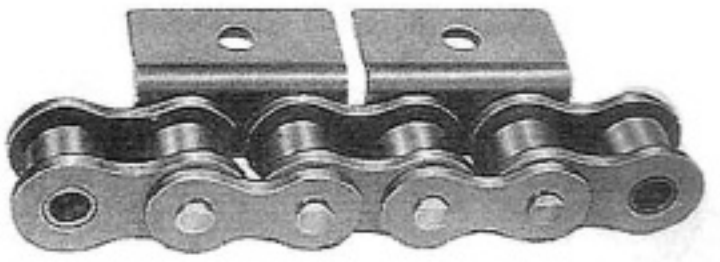

HC RO Chains
(Offset Side-Bar Roller Chains) (P.36)

HC Triple Chains (P.32)

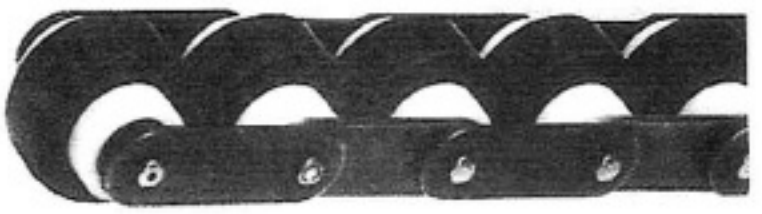

HC Oilless Chains (P.35)

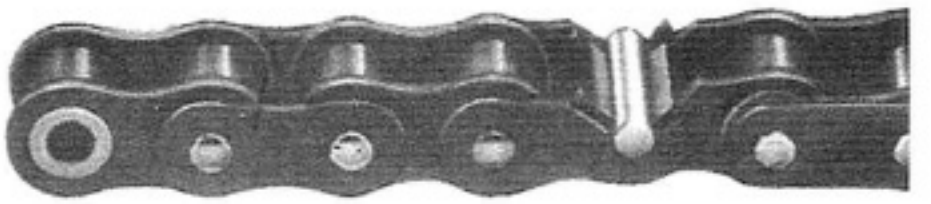

HC Side-Roller Chains(Kolo Chains)
(P.29)

HC Agricultural Chains (P.40)

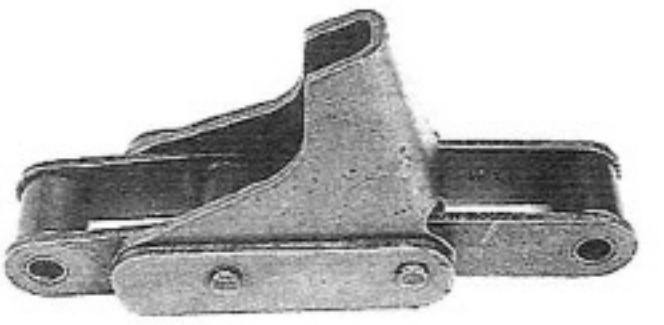

HC Side Roller Chains

■ Standard Side Roller Chain

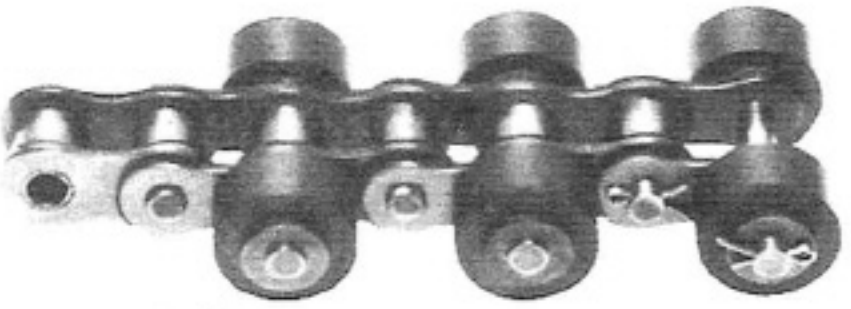

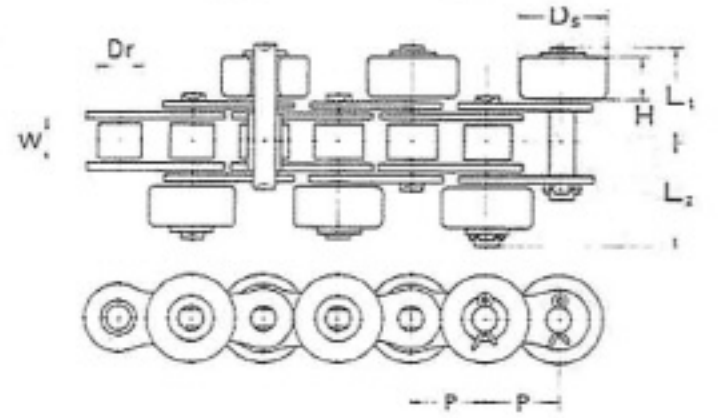

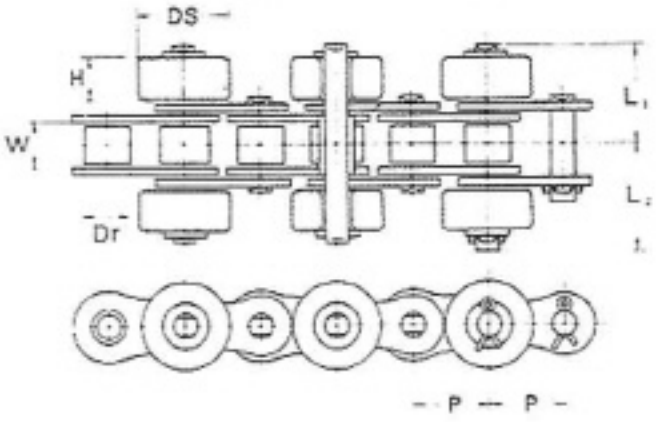

Dimension:mm

HC Chain No.	Pitch P	Inside Width W	Roller Dia Dr	Pin			Side Roller		Additional Weight of Side Roller(kg)		
				Dia d	L_1	L_2	Dia Ds	H	Steel Roller	Resin Roller	Rubber Roller
HC 40	12.70	7.95	7.94	3.97	17.7	19.9	15.88	7.8	0.014	0.004	0.007
HC 50	15.875	9.53	10.16	5.09	21.5	23.5	19.05	9.4	0.024	0.006	0.012
HC 60	19.05	12.70	11.91	5.96	27.5	30.2	22.23	12.6	0.043	0.010	0.025
HC 80	25.40	15.88	15.88	7.94	34.5	37.7	28.58	15.7	0.086	0.025	0.045
HC100	31.75	19.05	19.05	9.54	42.5	45.6	39.69	18.8	0.195	0.055	0.092

■ Double Pitch Side Roller Chain

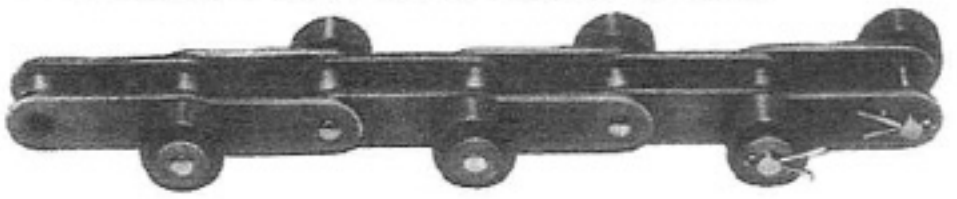

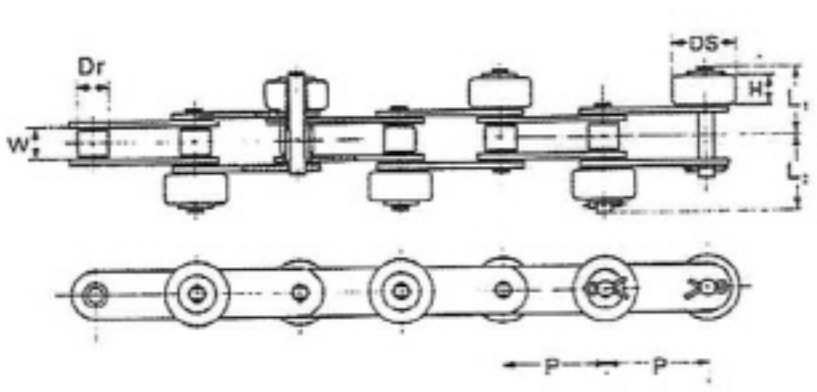

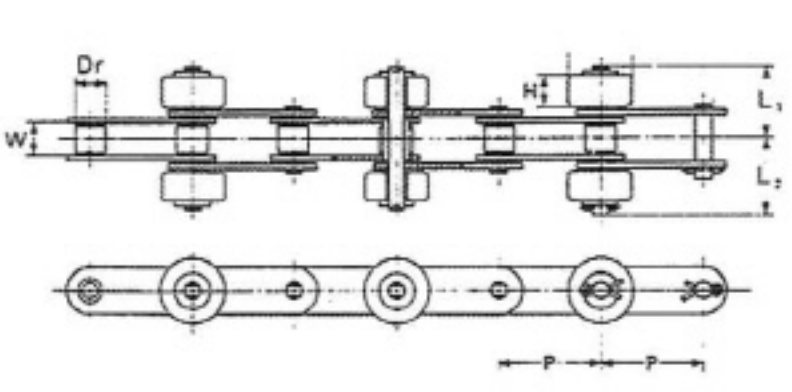

Dimension:mm

HC Chain No.	Pitch P	Inside Width W	Roller Dia Dr	Pin			Side Roller		Additional Weight of Side Roller(kg)		
				Dia d	L_1	L_2	Dia Ds	H	Steel Roller	Resin Roller	Rubber Roller
HC2040 HC2042	25.40	7.95	7.94 15.88	3.97	17.7	19.9	15.88 23.0	7.8	0.014 0.029	0.004 0.007	0.007 0.016
HC2050 HC2052	31.75	9.53	10.16 19.05	5.09	21.5	23.5	19.05 27.0	9.4	0.024 0.050	0.006 0.013	0.012 0.030
HC2060 HC2062	38.10	12.70	11.91 22.23	5.96	29.1	31.8	22.23 30.0	12.6	0.043 0.077	0.010 0.019	0.025 0.049
HC2080 HC2082	50.80	15.88	15.88 28.58	7.94	36.1	39.3	28.58 38.1	15.7	0.086 0.150	0.025 0.038	0.045 0.095
HC2100 HC2102	63.50	19.05	19.05 39.69	9.54	44.2	47.0	39.69 50.8	18.8	0.195 0.32	0.055 0.072	0.092 0.205

We Also Accept Buyer's Own Specification, Please Inquire About.

HC Top-Roller Chains(Standard)

■ Standard

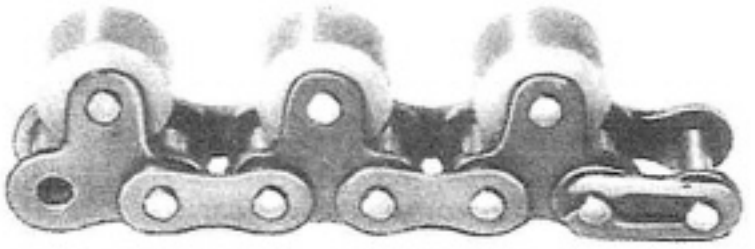

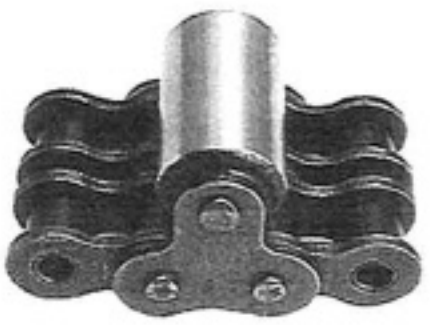

(Guide Type)

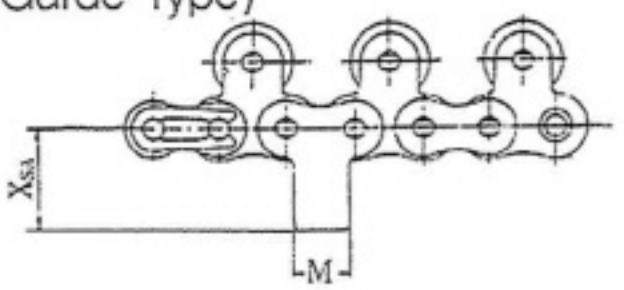

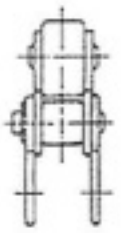

(Single Strand)

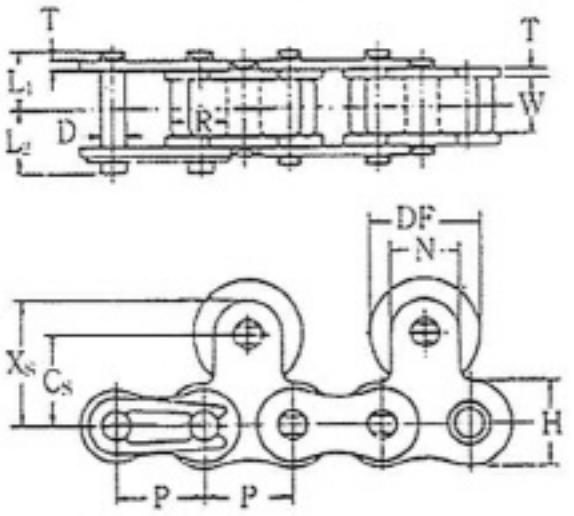

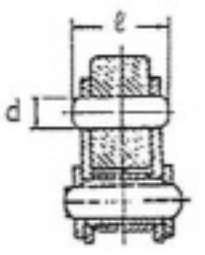

(Double Strands)

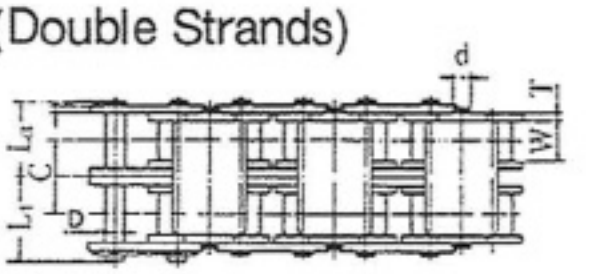

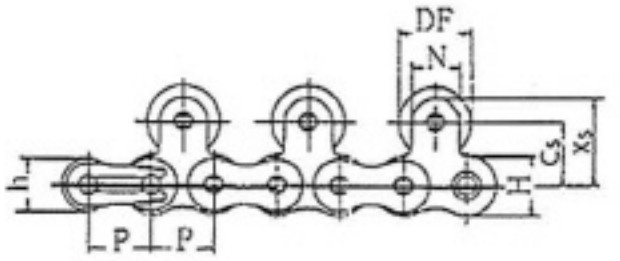

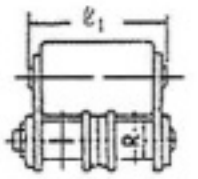

Dimension:mm

HC Chain No.	Pitch P	Inside Width W	Roller Dia R	Pin					Link Plate		Traverse Pitch C	Average Ultimate Strength (kg)	Max Allowable Load(kg)
				Dia D	L_1	L_2	L_3	L_4	H	T			
HC 40	12.70	7.95	7.94	3.97	8.25	9.95	–	–	12.0	1.5	–	1,920	370
HC 50	15.875	9.53	10.16	5.09	10.3	12.0	–	–	15.0	2.0	–	3,200	650
HC 60	19.05	12.70	11.91	5.96	12.85	15.25	–	–	18.1	2.4	–	4,400	900
HC 80	25.40	15.88	15.88	7.94	16.25	19.25	–	–	24.1	3.2	–	7,500	1,500
HC100	31.75	19.05	19.05	9.54	19.75	22.85	–	–	30.1	4.0	–	11,500	2,300
HC 40-2	12.70	7.95	7.94	3.97	–	–	15.45	17.15	12.0	1.5	14.4	1,920	630
HC 50-2	15.875	9.53	10.16	5.09	–	–	19.35	21.15	15.0	2.0	18.1	3,200	650
HC 60-2	19.05	12.70	11.91	5.96	–	–	24.25	26.75	18.1	2.4	22.8	4,400	900
HC 80-2	25.40	15.88	15.88	7.94	–	–	30.9	33.9	24.1	3.2	29.3	7,500	1,500
HC100-2	31.75	19.05	19.05	9.54	–	–	37.7	40.8	30.1	4.0	35.8	11,500	2,300

Dimension:mm

Attachment									Average Weight (kg/m)
D_F	C_S	N	X_S	X_{SA}	M	ℓ	ℓ_1	d	
15.88	12.7	9.5	17.45	17.40	9.5	13.2	–	4.03	1.3
19.05	15.9	12.7	22.25	23.05	12.7	16.2	–	5.2	1.9
22.23	18.3	15.9	26.25	26.85	15.9	20.6	–	6.1	2.9
28.58	24.6	19.1	34.15	35.45	19.1	25.1	–	8.07	4.8
39.69	31.8	25.4	44.5	44.00	25.4	31.0	–	9.73	7.9
15.88	12.7	9.5	17.45	17.40	9.5	–	28.3	4.03	2.6
19.05	15.9	12.7	22.25	23.05	12.7	–	34.3	5.2	3.8
22.23	18.3	15.9	26.25	26.85	15.9	–	43.4	6.1	5.8
28.58	24.6	19.1	34.15	35.45	19.1	–	55.0	8.07	9.6
39.69	31.8	25.4	44.5	44.00	25.4	–	66.9	9.73	15.8

HC Top-Roller Chains(Double Pitch)

■Double Pitch Type

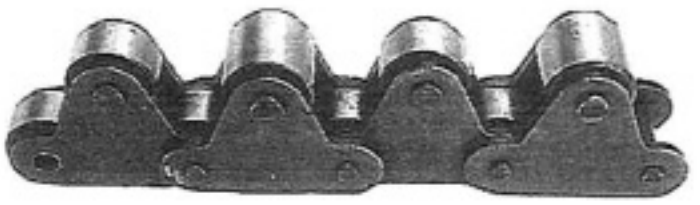

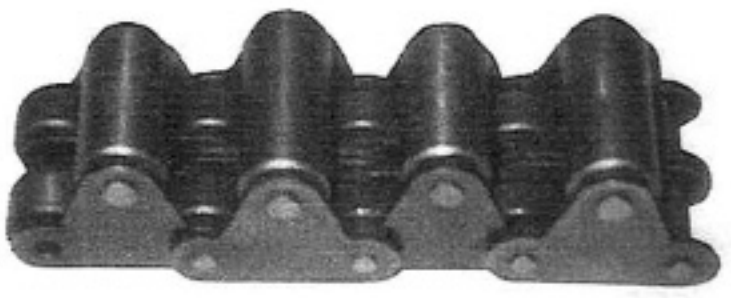

(Guide Type)

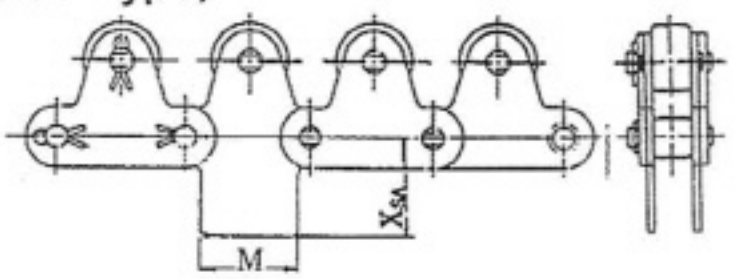

(Single Strand)

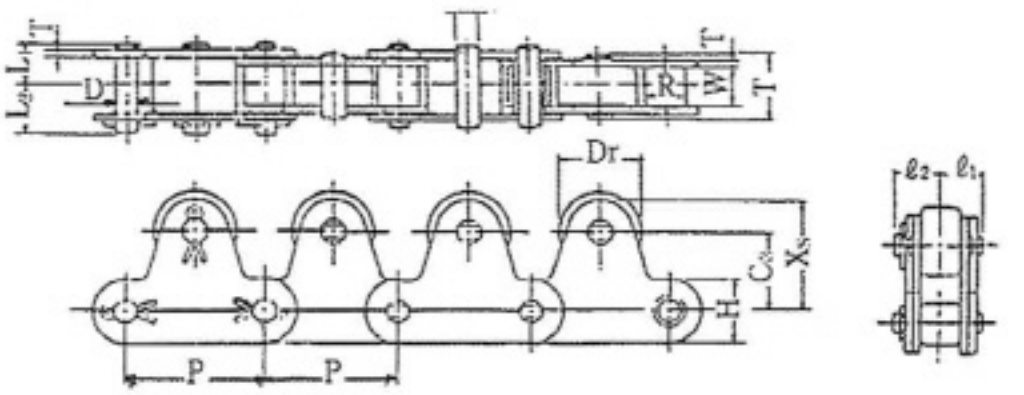

(Double Strands)

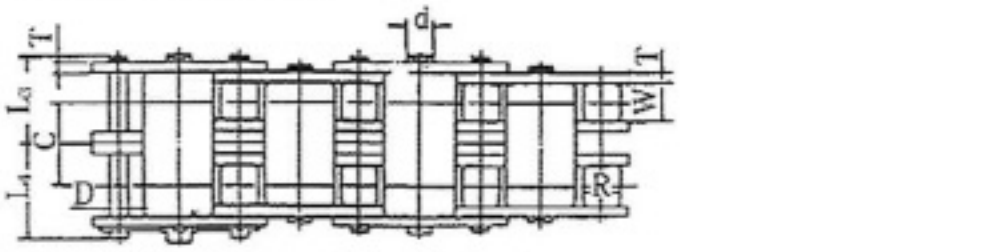

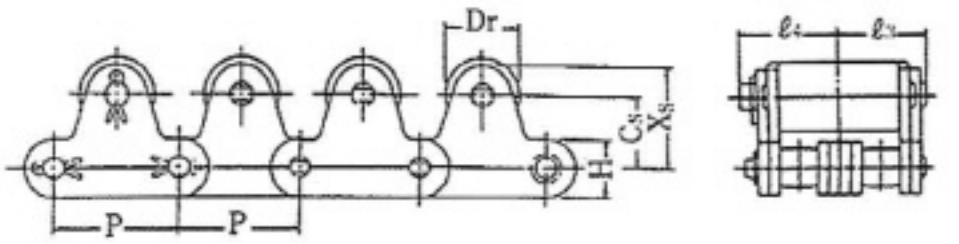

Dimension: mm

HC Chain No.	Pitch P	Inside Width W	Roller Dia R		Pin					Link Plate		Traverse Pitch	Average Ultimate Strength (kg)	Max Allowable Load (kg)
			S Roller	R Roller	Dia D	L_1	L_2	L_3	L_4	H	T	C		
HC 2040	25.40	7.95	7.94	15.88	3.97	8.25	9.65	—	—	12.0	1.5	—	1,920	370
HC 2050	31.75	9.53	10.16	19.05	5.09	10.30	11.90	—	—	15.0	2.0	—	3,200	650
HC 2060	38.10	12.70	11.91	22.23	5.96	14.55	16.95	—	—	17.2	3.2	—	4,400	900
HC 2080	50.80	15.88	15.88	28.58	7.94	17.95	20.95	—	—	23.0	4.0	—	7,500	1,500
HC 2100	63.50	19.05	19.05	39.69	9.54	21.40	24.50	—	—	28.6	4.8	—	11,500	2,300
HC 2040-2	25.40	7.95	7.94	15.88	3.97	—	—	15.45	16.85	12.0	1.5	14.4	3,840	630
HC 2050-2	31.75	9.53	10.16	19.05	5.09	—	—	19.35	20.95	15.0	2.0	18.1	6,400	110
HC 2060-2	38.10	12.70	11.91	22.23	5.96	—	—	27.65	30.05	17.2	3.2	26.2	4,400	900
HC 2080-2	50.80	15.88	15.88	28.58	7.94	—	—	34.25	37.25	23.0	4.0	32.6	7,500	1,500
HC 2100-2	63.50	19.05	19.05	39.69	9.54	—	—	40.95	44.05	28.6	4.8	39.1	11,500	2,300

Dimension: mm

Attachment										Average Weight(kg/m)	
D_r	C_S	X_S	ℓ_1	ℓ_2	ℓ_3	ℓ_4	X_{SA}	M	d	S	R
15.88	15.0	21.0	8.45	10.05	—	—	19.8	19.1	5.2	1.33	1.69
19.05	19.0	26.5	10.50	12.9	—	—	24.6	23.8	6.1	2.04	2.50
22.23	23.0	31.8	14.75	17.75	—	—	30.6	28.6	8.07	3.68	4.36
28.58	29.0	40.5	18.15	22.23	—	—	40.5	38.1	9.73	5.65	6.76
39.69	35.4	49.7	22.10	27.20	—	—	50.4	47.6	14.52	9.11	11.37
15.88	15.0	21.0	—	—	15.65	17.25	19.8	19.1	5.2	2.66	3.38
19.05	19.0	26.5	—	—	19.55	21.95	24.6	23.8	6.1	4.08	5.0
22.23	23.0	31.8	—	—	27.85	30.85	30.6	28.6	8.07	7.36	8.72
28.58	29.0	40.5	—	—	34.45	37.55	40.5	38.1	9.73	11.3	13.52
39.69	35.4	49.7	—	—	41.65	46.75	50.4	47.6	14.52	18.22	22.74

HC Triple Chains

■ Characteristics

1. Low Noise
2. Safety
3. Chain Speed $= \frac{1}{2.5}$ Reaction Speed

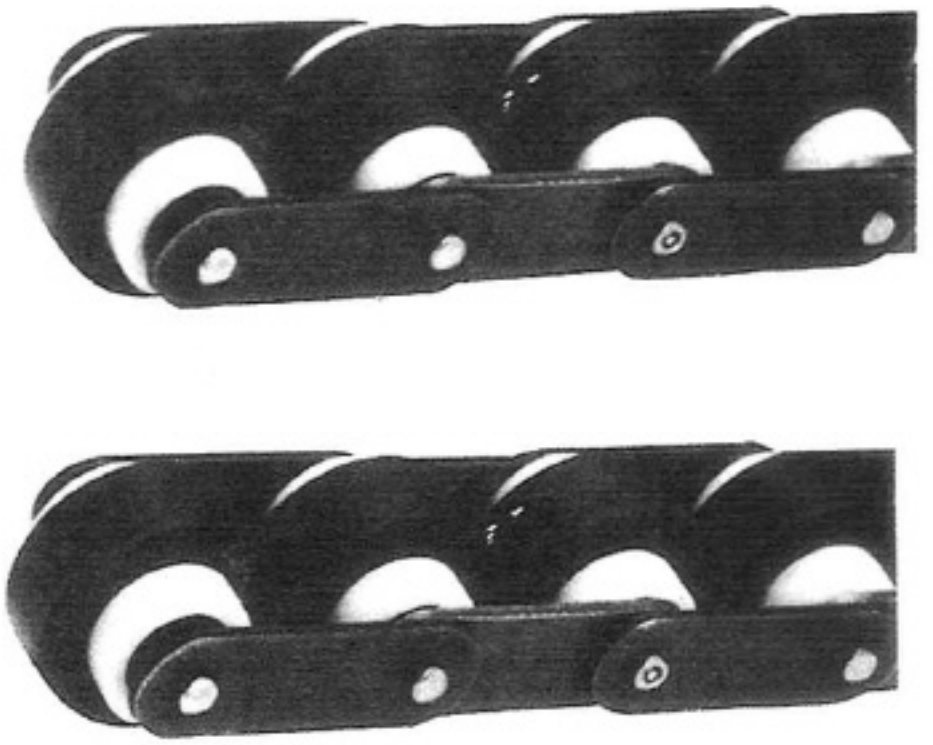

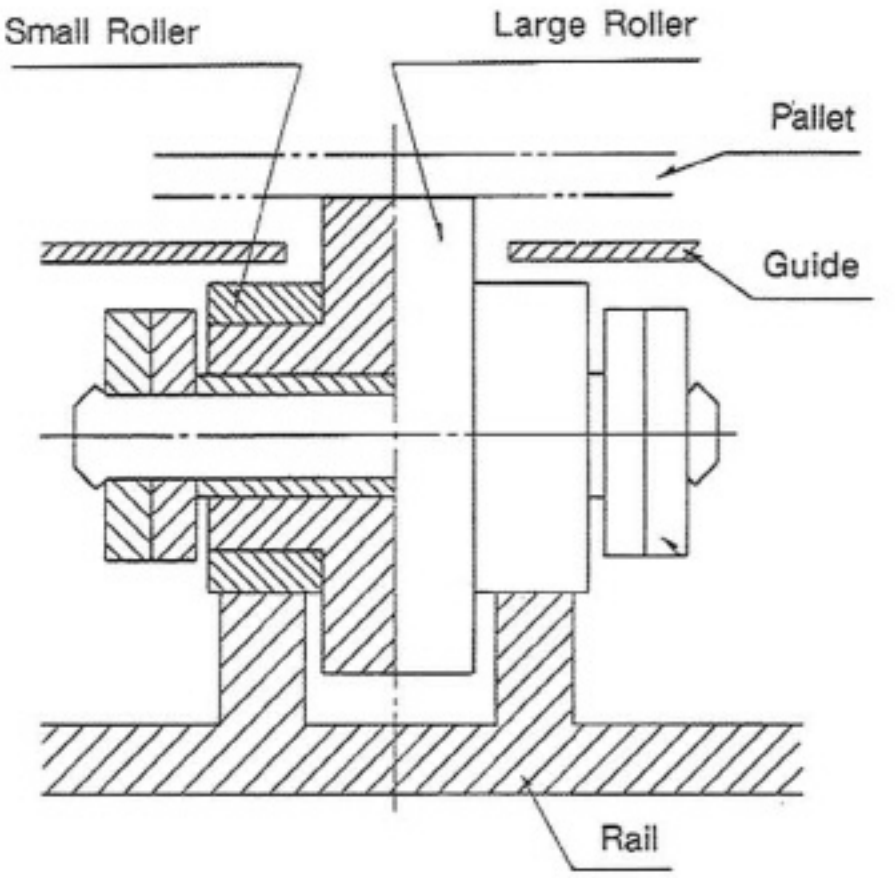

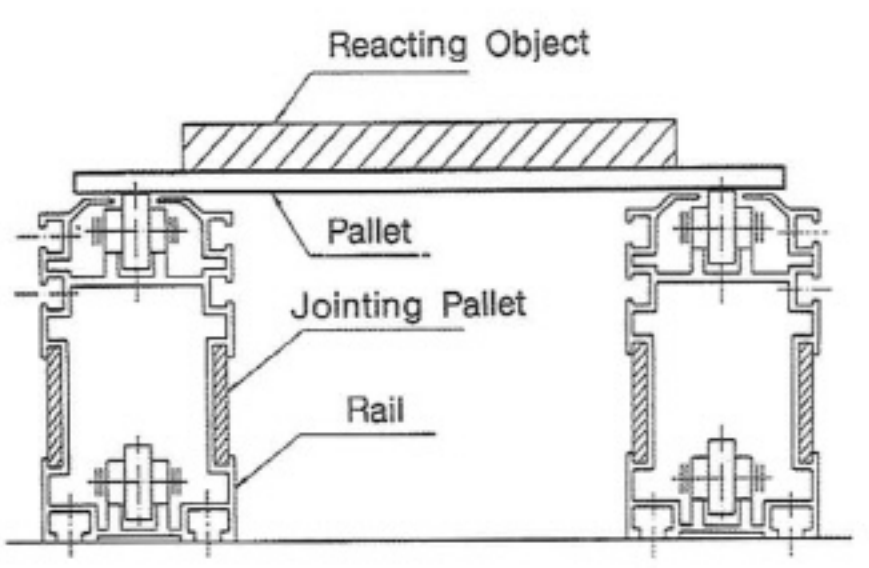

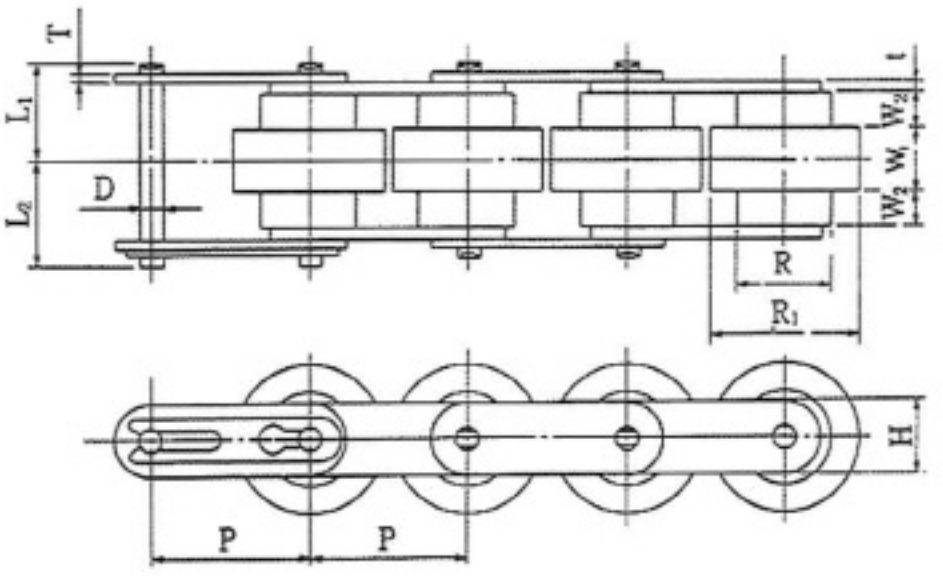

■ Dimensions

Dimension:mm

HC Chain No.	P	R	R_1	W_1	W_2	t	T	H	D	L_1	L_2	Max Allowable Tensile Strength (kg)	Roller Allowable Load (kg/m)	Max Chain Speed (m/mm)	Temperature (° C)	Average Weight (kg.f/m)
HC2040 TRP	25.40	12.0	24.5	15.0	8.0	2.0	1.5	10.0	3.97	19.3	21.0	45	14	15	−10	1.2
HC2050 TRP	31.75	19.05	30.6	13.0	7.1	2.4	2.0	15.0	5.09	19.55	21.25	70	21	15	≀	1.6
HC2060 TRP	38.10	15.88	36.0	19.0	10.5	3.2	3.2	18.1	5.96	28.4	29.7	105	35	15	80	2.5
HC2100 TRP	63.5	29.0	45.0	21	13	4.0	4.0	25.0	7.94	34.8	38	160	50	15		

HC Flat Side-bar Roller Chains

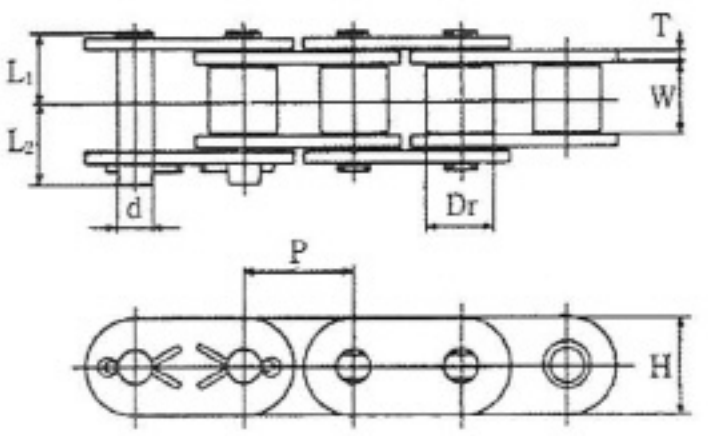

Dimension:mm

HC Chain No.	Pitch P	Roller Dia Dr	Inside Width W	Pin Dia d	Length of Pin		Link Plate		Average Ultimate Strength (kg.f)	Average Weight (kg/m)
					L_1	L_2	H	T		
HC 40 FP	12.70	7.94	7.95	3.97	8.10	9.20	12.0	1.5	1,900	0.77
HC 50 FP	15.875	10.16	9.53	5.09	10.10	11.70	15.0	2.0	3,200	1.20
HC 60 FP	19.05	11.91	12.70	5.96	12.60	14.40	18.1	2.4	4,400	1.60
HC 80 FP	25.40	15.88	15.88	7.94	16.25	19.25	24.1	3.2	7,500	2.74
HC 100 FP	31.75	19.05	19.05	9.54	19.80	22.90	30.1	4.0	11,500	4.08
HC 120 FP	38.10	22.23	25.40	11.11	24.80	28.2	36.2	4.8	15,600	5.98
HC 140 FP	44.45	25.40	25.40	12.71	25.60	31.35	42.2	5.6	20,500	7.70
HC 160 FP	50.80	28.58	31.75	14.29	31.60	37.10	48.2	6.4	26,300	10.23
HC 180 FP	57.15	35.71	36.0	17.46	35.9	41.7	54.2	7.2	33,800	13.50
HC 200 FP	63.5	39.69	38.1	19.85	39.05	46.65	60.3	8.0	43,500	17.33
HC 240 FP	76.2	47.63	47.63	23.81	47.2	54.8	72.4	9.5	65,000	25.60
HC 320 FP	101.6	63.5	63.65	31.75	63.8	77.6	92.0	12.7	110,000	47.6
HC 400 FP	127.0	79.38	679.3	39.68	79.65	92.65	120.0	16.0	185,000	83.9

HC Heavy Duty Roller Chains

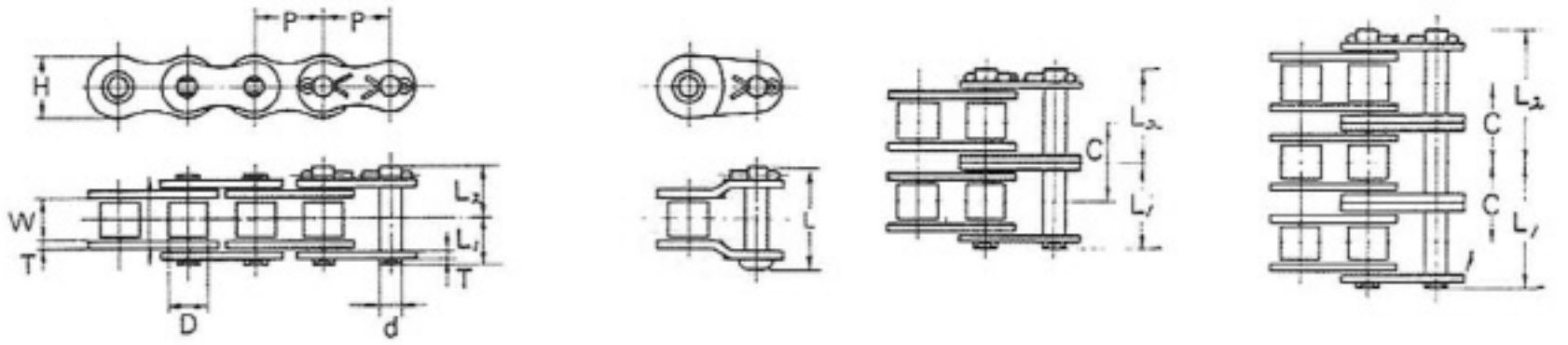

■ Chain Dimensions

Dimension: mm

HC Chain No.	Pitch P	Inside Width W	Roller Dia Dr	Pin					Link Plate		Chain Centers C	Average Ultimate Strength (kg)	Max Allowable Load(kg)	Average Weight (kg/m)
				Pin Dia d	L_1	L_2	L_1+L_2	Offset Pin L	Thickness T	Height C				
60H	19.05	12.70	11.91	5.96	14.25	15.75	30.0	32.7	3.2	17.5	26.1	5.050	1.000	1.77
60H-2					27.3	28.8	56.1	58.8				10,100	1,700	3.53
60H-3					40.35	41.85	82.2	84.9				15,150	2,500	5.27
60H-4					53.4	54.9	108.3	111.0				20,200	3,300	7.01
80H	25.40	15.88	15.88	7.94	17.7	20.8	38.5	40.2	4.0	23.0	32.6	8,200	1,650	2.96
80H-2					34.0	37.1	71.1	72.8				16,400	2,840	5.84
80H-3					50.3	53.4	103.7	105.4				24,600	4,100	8.73
80H-4					66.6	69.7	136.3	138.0				32,800	5,400	11.32
100H	31.75	19.05	19.05	9.54	21.72	24.68	46.4	47.6	4.8	28.9	39.1	12,400	2,520	4.17
100H-2					41.27	44.23	85.5	86.7				24,800	4,300	8.23
100H-3					60.82	63.78	124.6	125.8				37,200	6,300	12.30
100H-4					80.37	83.33	163.7	165.0				49,600	8,200	16.38
120H	38.10	25.40	22.23	11.11	26.852	30.20	57.1	58.9	5.6	35.0	48.9	16,900	3,350	6.28
120H-2					51.3	54.7	106.0	107.8				33,800	5,600	12.45
120H-3					75.75	79.15	154.9	156.7				50,700	8,300	18.61
120H-4					100.2	103.6	203.8	206.0				67,600	10,900	24.78
140H	44.45	25.40	25.40	12.71	28.95	32.95	61.9	63.8	6.4	40.7	52.2	21,800	4,400	7.83
140H-2					55.05	59.05	114.1	116.0				43,600	7,480	15.50
140H-3					81.15	85.15	166.3	168.2				65,400	11,000	23.17
140H-4					107.2	111.2	218.5	220.5				87,200	14,500	30.84
160H	50.80	31.75	28.58	14.29	34.2	38.9	73.1	75.6	7.15	46.7	61.9	28,600	5,730	10.9
160H-2					65.15	69.85	135.0	137.5				57,200	9,770	21.7
160H-3					96.1	100.8	196.9	199.4				85,800	14,400	32.4
160H-4					127.05	131.75	258.8	261.3				114,400	18,800	43.1
200H	63.50	38.10	39.68	19.85	42.85	49.85	92.7	95.5	9.5	58.4	78.3	46,000	80.70	19.2
200H-2					82.0	89.0	171.0	173.8				92,000	13,700	38.0
200H-3					121.15	128.15	249.3	252.1				138,000	20,100	56.8
200H-4					160.3	167.3	327.6	330.4				184,000	26,400	75.6

HC Oilless Chains

■ Standard Roller Chains

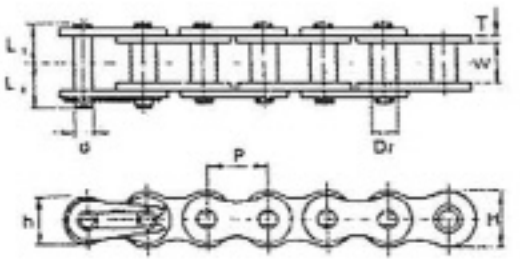

Dimension: mm

HC Chain No.	Pitch P	Inside Width W	Bush Dia Dr	Pin				Link Plate		Average Ultimate Strength (kg.f)	Average Weight (kg/m)
				Dia d	Length L_1+L_2	Size L_1	Size L_2	Thickness T	Height H		
HC 40 OL	12.70	7.95	7.95	3.97	17.55	8.02	9.52	1.5	11.7	1,500	0.58
HC 50 OL	15.875	9.53	10.16	5.09	21.75	10.15	11.6	2.0	14.6	2,400	0.97
HC 60 OL	19.05	12.70	11.91	5.96	26.8	12.65	14.15	2.4	17.5	3,500	1.41
HC 80 OL	25.40	15.88	15.88	7.94	35.25	16.07	19.18	3.2	23.0	5,900	2.40

■ Double Pitch Chains For Transmission

Dimension: mm

HC Chain No.	Pitch P	Inside Width W	Bush Dia Dr	Pin				Link Plate		Average Ultimate Strength (kg.f)	Average Weight (kg/m)
				Dia d	Length L_1+L_2	Size L_1	Size L_2	Thickness T	Height H		
HC 2040 OL	25.40	7.95	7.95	3.97	17.55	8.02	9.52	1.5	11.7	1,500	0.40
HC 2050 OL	31.75	9.53	10.16	5.09	21.75	10.15	11.6	2.0	14.6	2,400	0.67
HC 2060 OL	38.10	12.70	11.91	5.96	26.8	12.65	14.15	2.4	17.5	3,500	0.97
HC 2080 OL	50.80	15.88	15.88	7.94	35.25	16.07	19.18	3.2	23.0	5,900	1.80

■ Double Pitch Chains For Conveyor

S-Roller Type

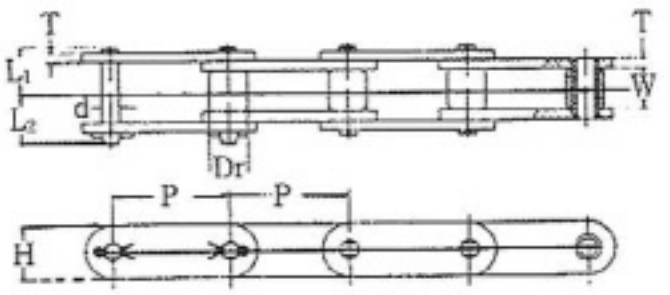

R-Roller Type

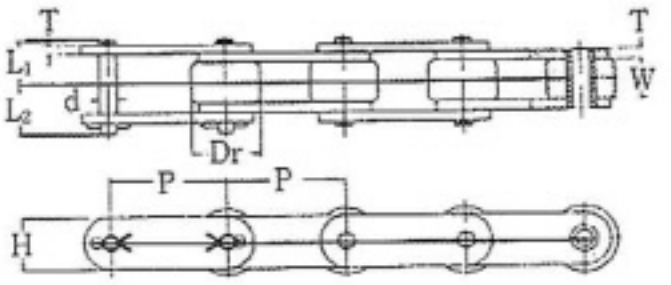

Dimension: mm

HC Chain No.	Pitch P	Inside Width W	Bush Dia Dr	Pin				Link Plate		Average Ultimate Strength (kg.f)	Average Weight (kg/m)
				Dia d	Length L_1+L_2	Size L_1	Size L_2	Thickness T	Height H		
HC 2040 OL	25.40	7.95	7.95	3.97	17.55	8.02	9.52	1.5	11.7	1,500	0.49
HC 2042 OL			15.88								0.77
HC 2050 OL	31.75	9.53	10.16	5.09	21.75	10.15	11.6	2.0	14.6	2,400	0.80
HC 2052 OL			19.05								1.21
HC 2060 OL	38.10	12.70	11.91	5.96	26.8	12.65	14.15	2.4	17.5	3,500	1.18
HC 2062 OL			22.23								1.76
HC 2080 OL	50.80	15.88	15.88	7.94	35.25	16.07	19.18	3.2	23.0	5,900	2.00
HC 2082 OL			28.58								3.04

O-Ring Chains

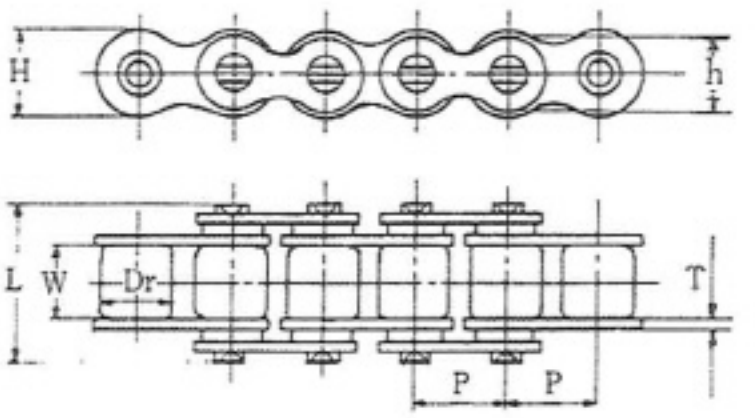

Dimension:mm

HC Chain No.	Pitch P	Inside Width W	Bush Dia Dr	Pin			Link Plate			Average Ultimate Strength (kg. f)	Average Weight (kg/m)
				Dia d	Length		Thickness T	Height H	Height h		
					L	(max)					
HC 40 OR	12.70	7.95	7.95	3.97	20.0	20.0	1.5	12.0	10.4	1,920	0.67
HC 50 OR	15.875	9.53	10.16	5.09	23.4	23.7	2.0	15.0	13.0	3,200	1.08
HC 60 OR	19.05	12.70	11.91	5.96	28.8	29.8	2.4	18.1	15.6	4,400	1.62
HC 80 OR	25.40	15.88	15.88	7.94	36.6	38.9	3.2	24.1	20.8	7,500	2.83

HC Offset Side Bar Roller Chains(RO Chains)

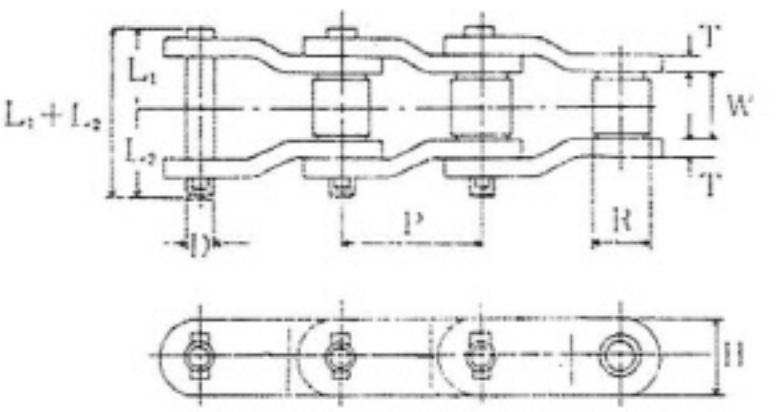

Dimensions

Dimension:mm

HC Chain No.	Standard	Pitch P	Roller Die R	Inside Width W	Link Plate		Pin				Average Ultimate Strength (kg)	Average Weight (kg/m)
					Thickness T	Height H	Dia D	L_1+L_2	L_1	L_2		
RO3140T		44.45	25.40	25.4	5.6	43.2	12.51	62.5	28.45	34.05	25,400	7.7
RO1613AK		50.80	28.58	31.5	8.1	42.9	15.06	78.0	36.20	41.80	31,750	11.3
RO 25H	ANSI	63.50	31.75	38.1	9.5	41.5	15.88	92.5	43.05	49.45	39,700	13.7
RO 568	ANSI	77.90	41.28	40.1	9.5	54.0	19.05	97.0	45.05	51.95	52,400	17.7
BO 2512		77.90	31.75	38.1	9.5	54.0	19.05	93.5	44.05	49.45	52,400	17.0
BO 3H R	API	78.11	31.75	38.1	9.5	41.5	15.88	92.5	43.05	49.45	39,700	12.4
RO 3125	API	79.38	4.128	41.2	9.5	54.0	20.32	99.5	45.90	53.60	52,000	18.8
RO 1616	ANSI	88.90	44.45	38.6	12.7	54.0	22.23	111.7	51.60	60.10	63,500	23.9
RO 4HF	API	103.20	44.45	49.2	16.0	59.0	22.23	135.7	63.60	72.10	80,300	23.2
RO 4		103.20	44.45	49.1	12.7	54.0	22.23	122.2	56.85	65.35	63,500	21.0
RO 1245	ANSI	103.45	45.24	49.2	14.5	60.0	23.80	130.0	60.25	69.75	84,600	27.2
RO 1245	ANSI	103.45	45.24	49.2	14.5	60.0	23.80	130.0	60.25	69.75	84,600	27.2
RO 635	ANSI	114.30	57.15	52.4	14.5	76.0	27.90	135.5	64.25	71.25	113,000	38.3
RO 1602AA	ANSI	127.00	63.50	70.0	16.0	90.0	31.75	161.2	77.05	84.15	156,000	52.3

Agricultural Roller Chain

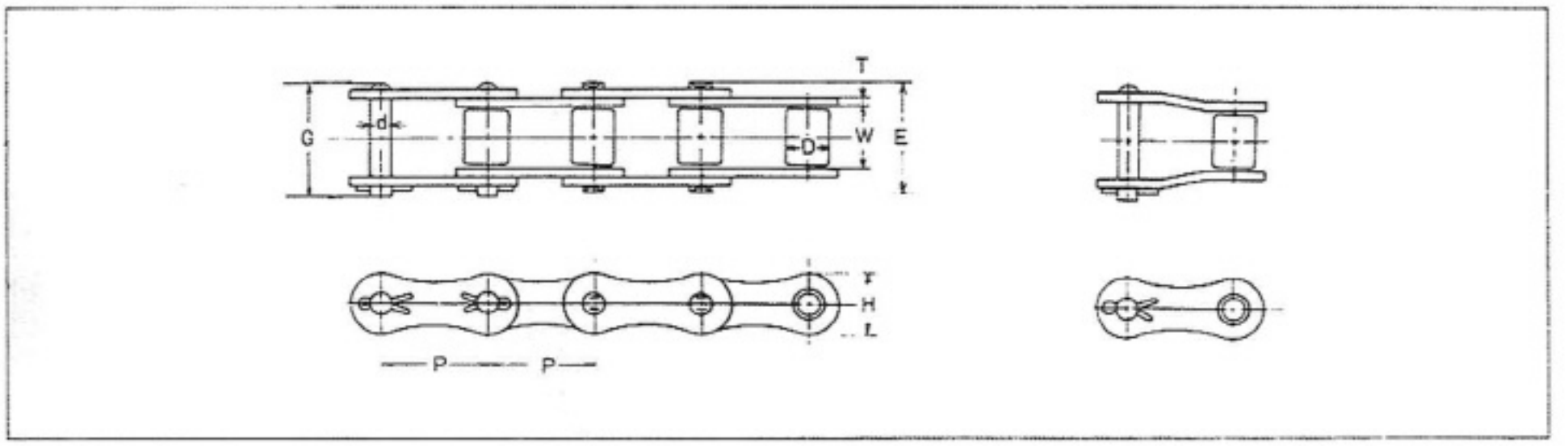

Dimensioms (mm)

Chain No	Pitch P	Rooler Link Width W	Roller Dia. D	Pin			Linkplate		Min Tensile Strength(kg f)
				D	E	G	T	H	
S32	29.21	15.88	11.43	4.47	25.95	27.70	1.50	12.80	900
S52	38.10	22.23	15.24	5.74	36.89	38.39	2.40	16.4	2.000
S55	41.40	22.23	17.78	5.74	36.89	38.39	2.40	16.6	2.000
S62	41.91	25.40	19.05	5.74	40.25	41.75	2.40	16.8	2.000

■ Attachment

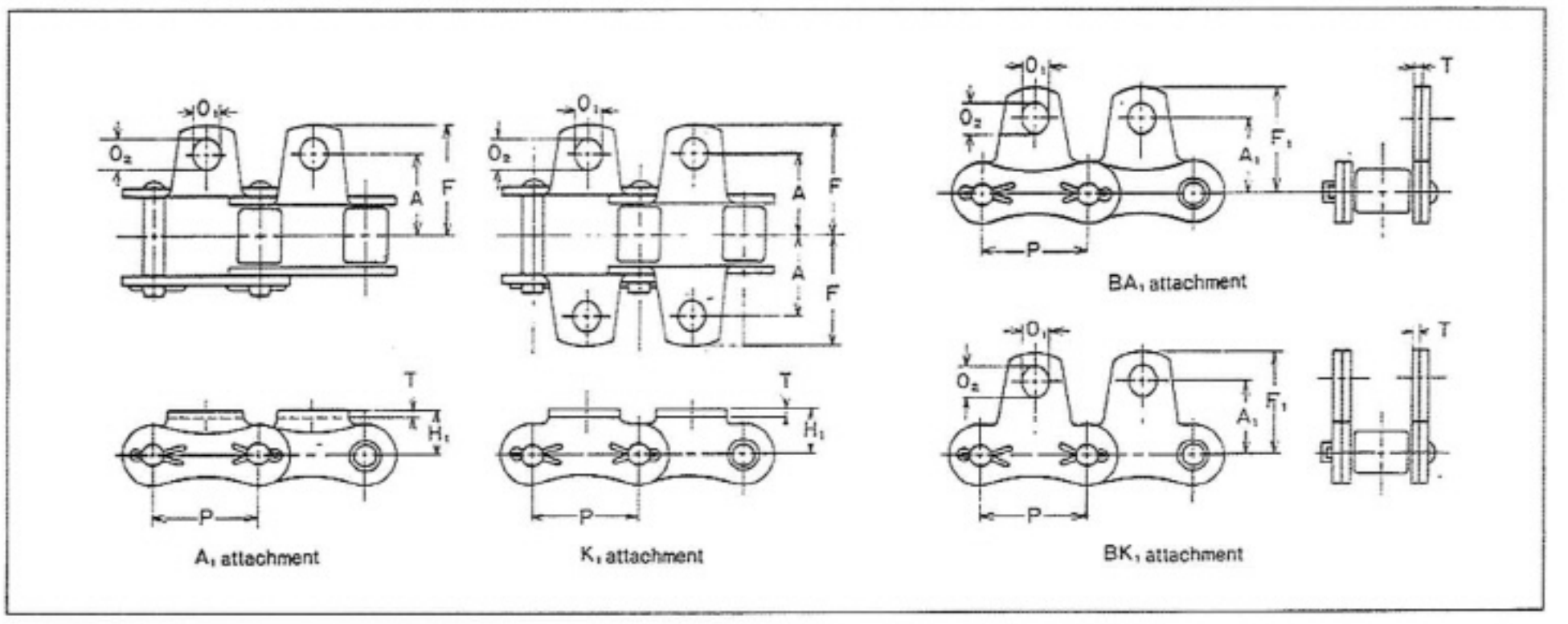

Dimensioms (mm)

Chain No	Pitch P	A, K Attachment			BA, BK Attachment		A, K, BA, BK Attachment		
		A	F	H_1	A_1	F_1	O_1	O_2	T
S32	29.21	21.43	29.95	8.60	17.3	25.6	5.2	6.8	1.50
S52	38.10	29.35	38.25	11.40	22.1	30.9	6.9	8.5	2.40
S55	41.40	27.00	37.00	11.40	19.5	29.6	6.9	10.1	2.40
S62	41.91	33.35	47.65	11.40	24.6	37.9	6.9	13.2	2.40

HC Farming Machinery Chains

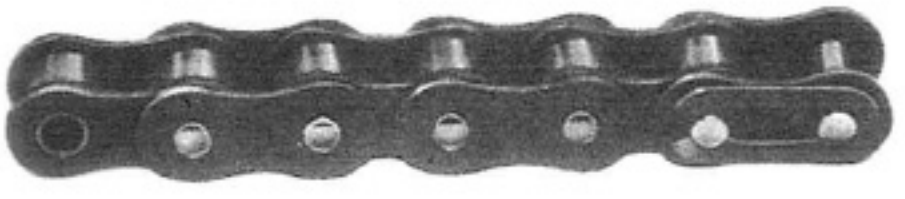

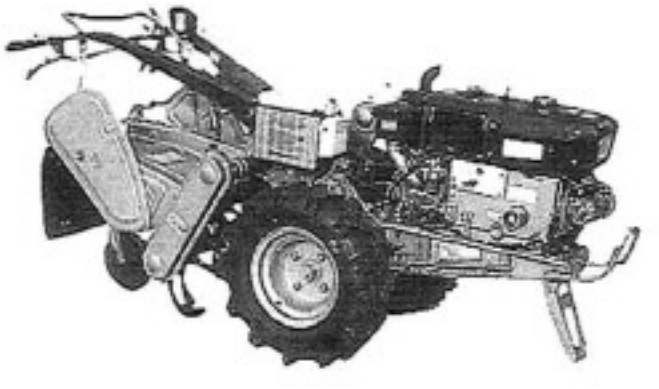

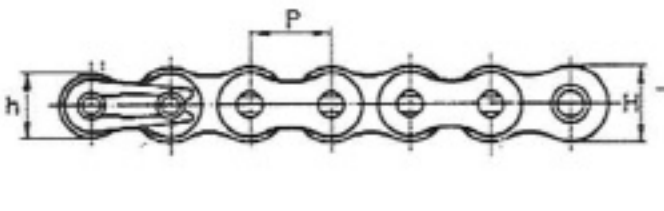

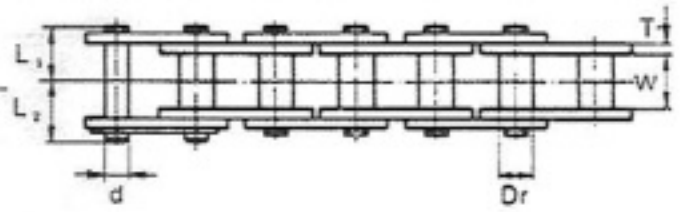

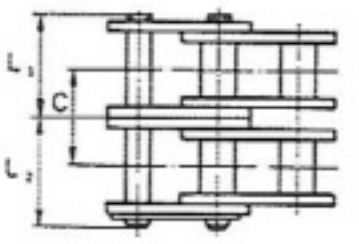

Dimension:mm

HC Chain No.	Pitch P	Roller Dia Dr	Inside Width W	Dia d	Pin Length		Link Plate				Traverse Pitch C	Average Ultimate Strength (kg.f)	Application To Machines
					L_1	L_2	H	h	T	t			
HC 415S	12.7	7.77	4.76	3.96	6.625	7.15	12.0	10.4	1.5	1.5		1.720	Binder, Transplanter, Combine
HC 420	12.7	7.77	6.35	3.96	7.27	8.53	12.0	10.4	1.5	1.5		1.720	Binder
HC 50H	15.875	10.16	9.53	5.09	10.3	12	15.0	13.0	2.0	2.0		3.200	Power-Tiller, Trans Planter
HC 50HH	15.875	10.16	9.53	5.09	10.7	10.7	15.0	13.0	2.4	2.0		3.400	Garden-Tiller
HC 60H	19.05	11.91	9.60	5.96	11.1	11.1	18.10	15.60	2.4	2.4		4.500	〃
HC 60HH	19.05	11.91	12.70	5.96	14.33	14.33	18.10	15.60	3.2	3.2		5.000	Power-Tiller
HC 61HH	19.05	11.91	9.60	5.96	12.60	12.60	18.10	15.60	3.2	3.2		5.000	〃
HC 61-2	19.05	11.91	9.60	5.96	20.80	20.80	18.10	15.60	2.4	2.4	19.6	7.660	〃
HC 60SH	19.05	14.28	13.50	7.10	14.95	14.95	17.90	18.10	3.5	3.2		6.000	〃
HC 80HH	25.40	15.88	15.88	7.94	17.85	17.85	24.1	20.8	4.0	4.0		9.000	Small Tractor(15HP)
HC 80SHT	25.40	15.88	15.88	10.02	21.6	21.6	26.9	26.9	6.0	5.0		12.500	Small Tractor(22HP)
HC 90SHT	28.575	21.3	17.46	11.11	46.91	46.91	30.6	30.6	6.4	5.6		14.000	Tractor(32HP)
HC100SHT	31.75	23.65	19.05	12.71	54.1	54.1	33.2	33.2	8.0	6.4		17.500	Tractor(50HP)

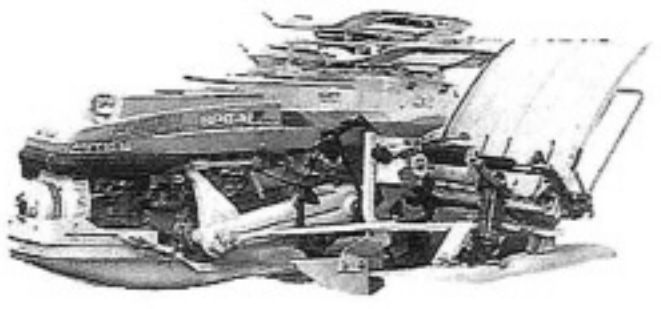

Introduction

HC Hollow Pin Chains (P.26)

HC Skid Chains for Automobile Manufacturing Line (P.57)

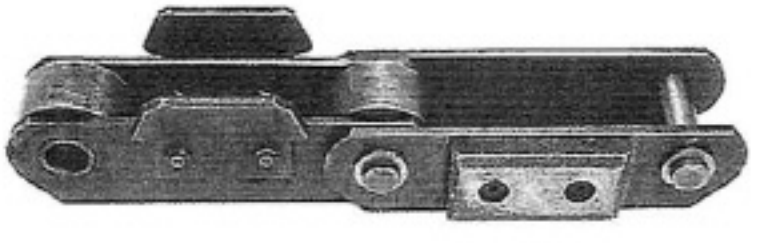

HC Agricultural Roller Chain(P.37)

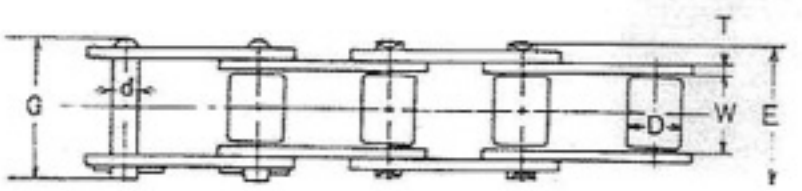

HC Feeding Chains (P.39)

HC Trencher Chains (P.41)

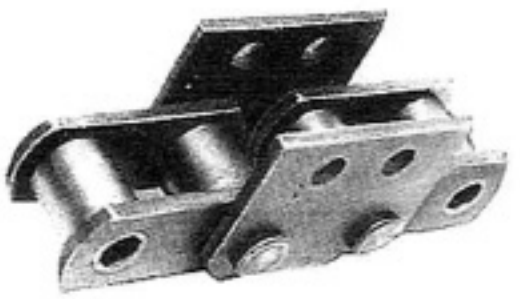

HC Farming Machinery Chains (P.38)

HC Escalator Step Chains (P.67~68)

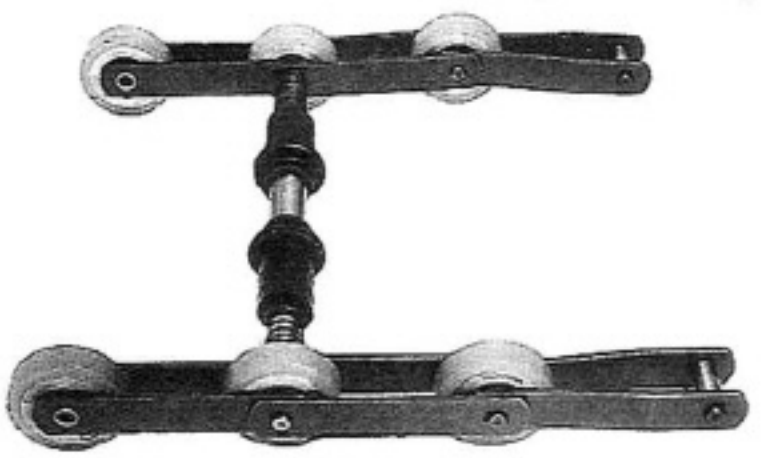

HC 81X Conveyor Chains (P.65)

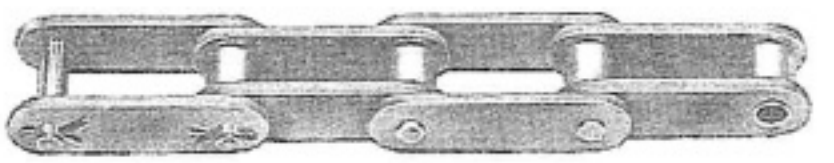

HC Feeding Chains

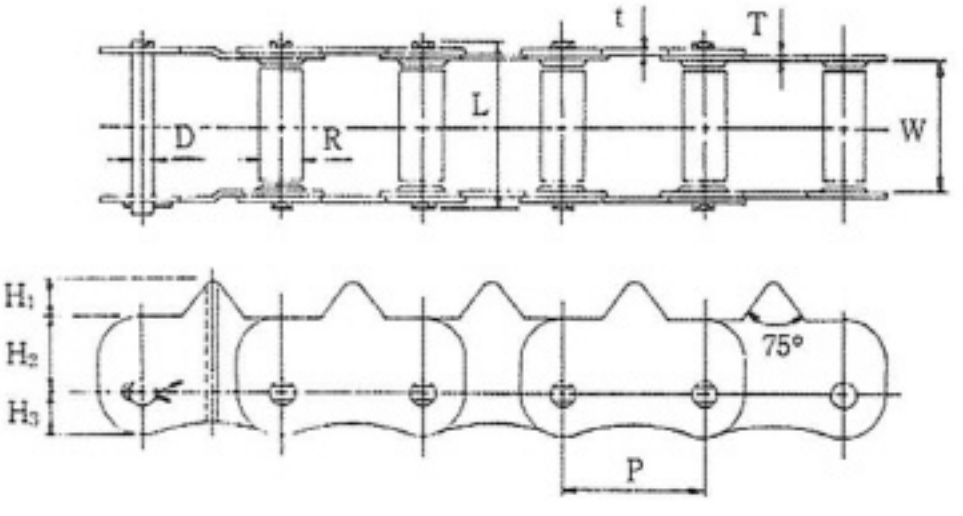

Dimension: mm

HC Chain No.	Pitch P	Roller Dia R	Inside Width W	Plate					Pin		Breaking Strength (kg.f)
				T	t	H_1	H_2	H_3	D	L	
HC3318	33.0	10.0	18.0	2.0	1.5	10	10	10	7.0	28.6	3500
HC3322	33.0	10.0	22.0	2.0	1.5	15	10	13	7.0	33.3	3500
HC3325	33.0	10.0	25.0	2.0	1.5	10	10	10	7.0	35.6	3500
HC3330	33.0	10.0	30.0	2.0	1.5	10	10	10	7.0	41.3	3500
HC3330	33.0	10.0	30.0	2.0	1.5	20	10	13	7.0	41.3	3500
HC3350	33.0	10.0	50.0	2.0	1.5	10	18	10	7.0	61.0	3500
HC3355	33.0	10.0	55.0	2.0	1.5	10	18	10	7.0	66.0	3500
HC3358	33.0	10.0	58.0	2.0	1.5	10	15	13	7.0	69.3	3500
HC3358	33.0	10.0	58.0	2.0	1.5	10	18	10	7.0	69.3	3500
HC3358	33.0	10.0	58.0	2.0	1.5	15	18	10	7.0	69.3	3500
HC3550	35.0	12.0	50.0	2.0	2.0	10	18	10	8.0	62.5	3800
HC3558	35.0	12.0	58.0	2.0	2.0	10	18	10	8.0	70.5	3800

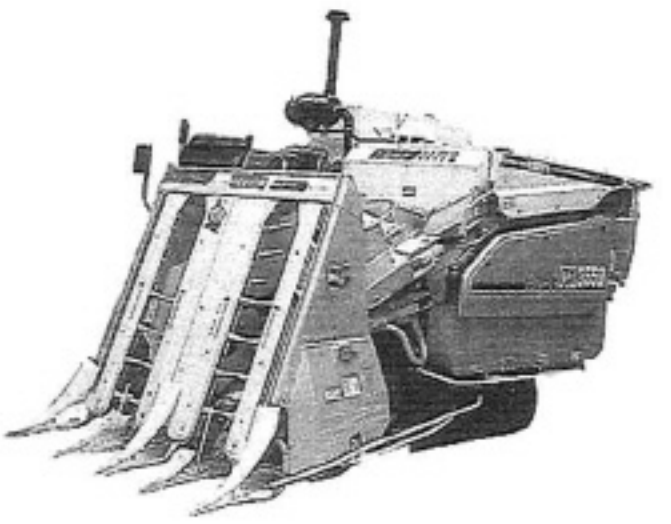

HC Agricultural Chains

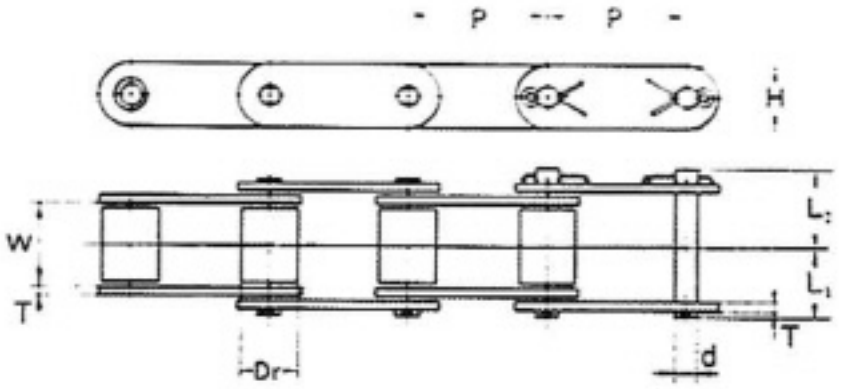

■CA- Type Chain Dimensions

Dimension: mm

HC Chain No.	Pitch P	Inside Width W	Roller Dia Dr	Pin			Plate		Average Ultimate Strength (kg.f)	Average Weight (kg/m)
				Dia d	L_1	L_2	Height H	Thickness T		
HC CA550	41.40	19.81	16.80	7.14	17.3	20.9	25.91	2.68	5,500	1.84
HC' CA555	41.40	12.70	16.80	7.14	14.6	18.1	19.10	3.2	5,700	1.77
HC CA557	41.40	19.05	15.75	7.99	17.9	21.6	26.05	3.2	6,200	2.37

■Attachment Specifications

C5E

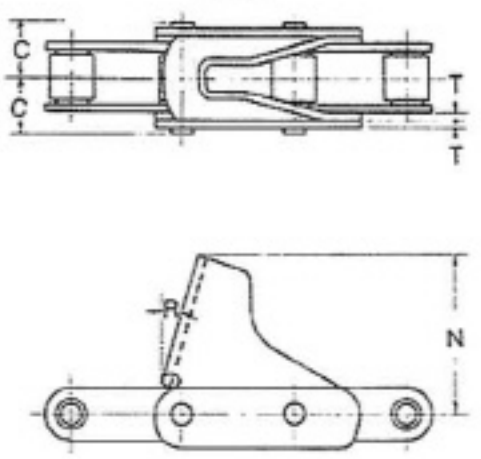

C21E

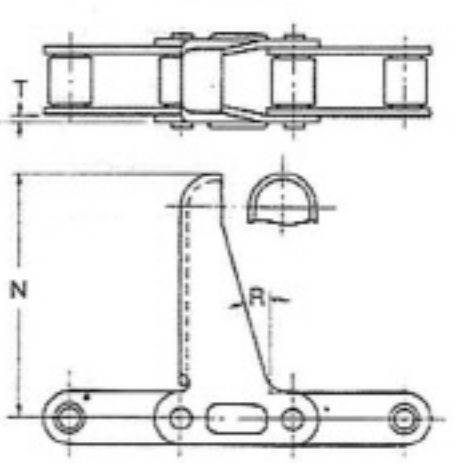

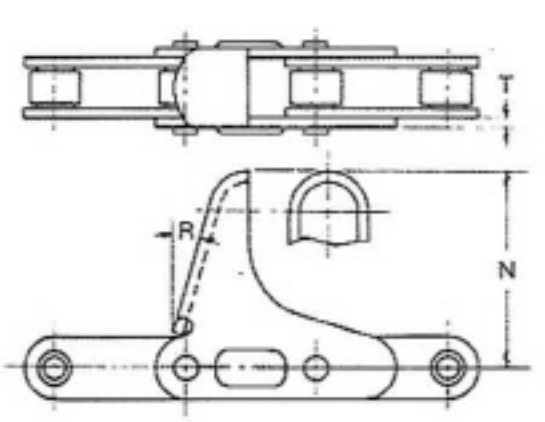

Attachment	Chain No.	R	N	C	T
C5E	CA550	15°	59.00	21.1	3.14
C21E	CA550	16°	92.07		2.68

Chain No.	R	N	A1	A2	F3	D3	G	T
CA555	15°	63.50						3.14

A4

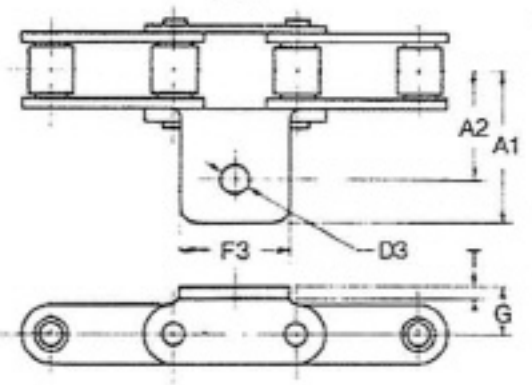

AA3

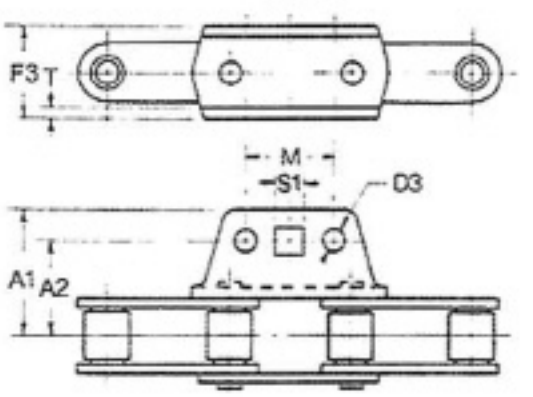

Attachment	Chain No.	A1	A2	M	D3	S1	F3	G	T
A4	CA557	52.39	36.91		10.32		38.10	15.88	4.50
AA3	CA557	43.29	31.90	30.20	8.20	9.73	31.06		3.40

HC Trencher Chains

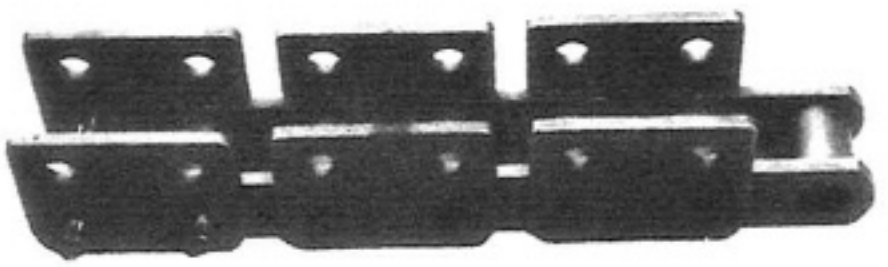

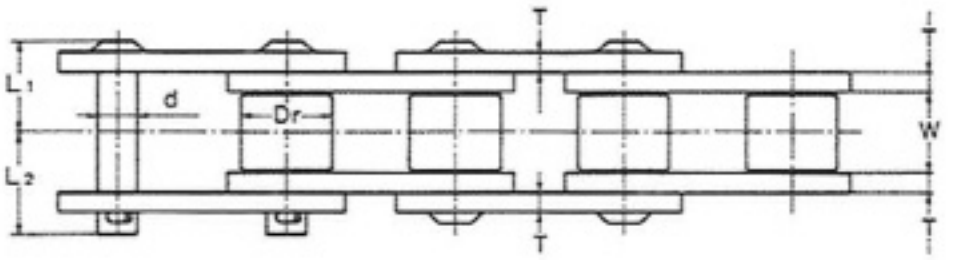

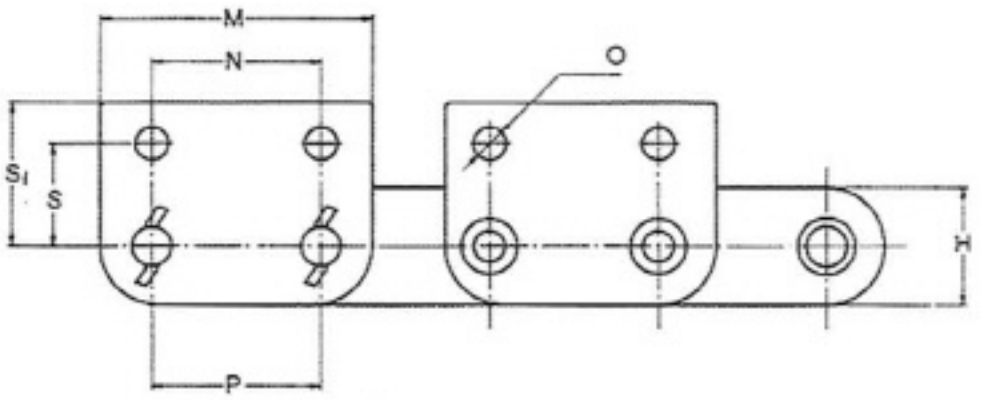

■Types Of Attachments

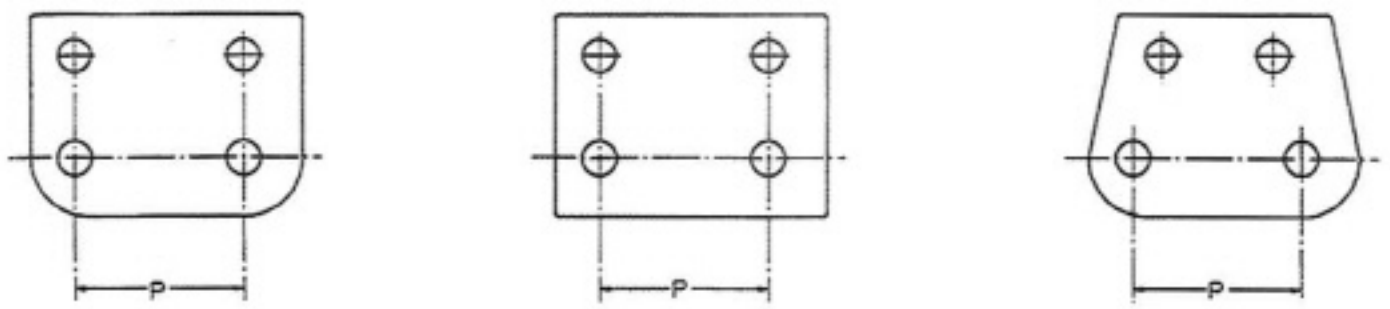

■Chain and Attachment Dimensions

Dimension: mm

HC Chain No.	Pitch P	Inside Width W	Roller Dia Dr	Pin			Plate		Average Ultimate Strength (kg.f)	Average Weight (kg/m)
				Out Dia d	L_1	L_2	Height H	Thickness T		
HC T432L	42.01	25.4	22.23	11.11	27.7	30.2	27.0	4.8	10,000	6.1
HC T432	42.01	25.4	22.23	11.11	27.7	30.2	28.6	4.8	12,000	6.3
HC T432H	42.01	25.4	22.23	11.11	30.7	33.3	31.8	6.4	15,000	7.9
HC T2000	50.8	31.75	28.58	14.1	34.5	40.1	38.1	6.4	21,000	11.5
HC T2069	66.27	31.75	28.58	14.1	34.5	40.1	38.1	6.4	21,000	10.5
HC T3067	77.90	37.31	41.28	19.05	47.2	47.8	47.6	8.0	31,000	17.8
HC T3067H	77.90	39.70	41.28	19.05	47.2	51.8	57.2	9.5	50,000	25.2
HC T3075	78.10	38.10	41.28	19.84	44.5	51.6	57.2	9.5	51,000	25.0

Dimension: mm

HC Chain No.	S	S_1	M	N	O	K	T
HC T432L	28.0	38.5	74.0	25.0	10.1	15.875	4.8
HC T432	28.6	40.0	74.0	25.4	10.2	15.875	4.8
HC T432H	33.15	44.7	69.85	41.3	10.2	15.875	6.4
HC T2000	38.1	57.15	89.0	50.8	13.8	15.875	6.4
HC T2609	41.3	57.15	107.0	50.8	16.3	15.875	6.4
HC T3067	50.8	71.5	135.0	77.8	20.7	15.875	8.0
HC T3067H	50.8	73.0	135.0	77.8	20.7	15.875	9.5
HC T3075	51.5	73.0	136.0	78.1	20.7	15.875	9.5

HC Leaf Chains

■ Types

AL Type

BL Type

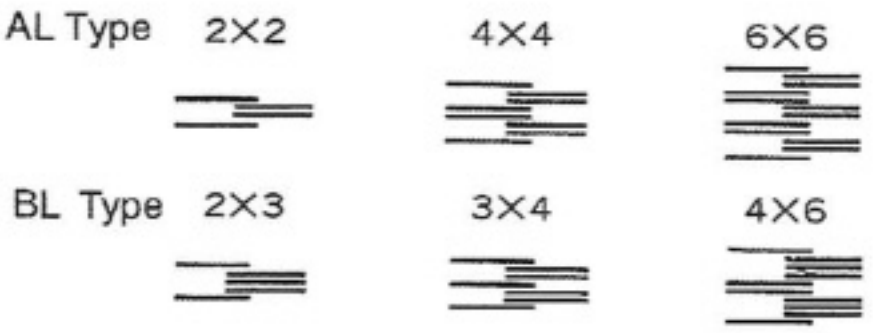

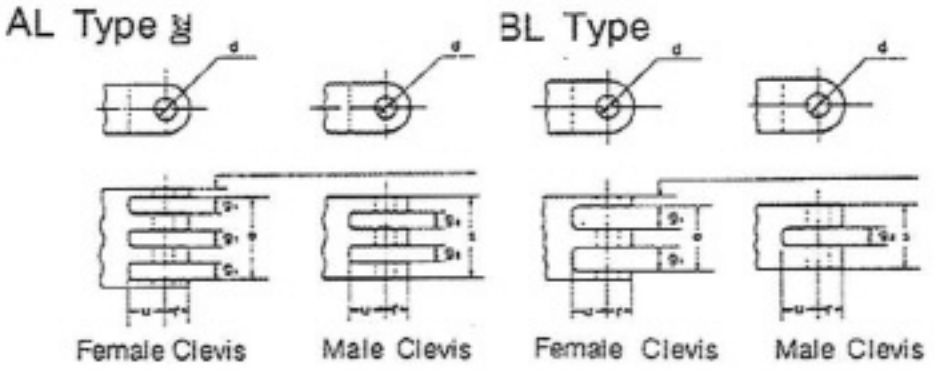

Dimension:mm

HC Chain No.	Pitch	Lacing Combination	Chain Bodies: Link Plate H	Link Plate T	Pin D	Pin L	Proof Strength (kg)	Average Weigth (kg)	Clevis: Min d	Max r	Min u	e	g_1	s	g_2
AL 422	12.70	2X2	10.4	1.5	3.96	8.40	1,700	0.38	4.02	6.3	6.0	—	3.4	3.1	—
AL 444		4X4				14.85	3,400	0.74				9.8		9.5	3.4
AL 466		6X6				21.30	5,100	1.10				16.2		15.9	3.4
AL 522	15.875	2X2	13.0	2.0	5.06	10.85	2,800	0.62	5.13	7.9	7.2	—	4.4	4.1	—
AL 544		4X4				19.35	5,600	1.22				12.9		12.6	4.4
AL 566		6X6				27.80	8,400	1.81				21.3		21.0	4.4
AL 622	19.05	2X2	15.6	2.4	5.92	12.65	3,900	0.87	6.00	9.5	9.0	—	5.1	4.8	—
AL 644		4X4				22.56	7,800	1.71				15.0		14.7	5.1
AL 666		6X6				32.45	11,700	2.54				24.8		24.5	5.1
AL 822	25.40	2X2	20.8	3.2	7.88	16.35	6,600	1.51	7.97	12.7	11.5	—	6.9	6.4	—
AL 844		4X4				29.80	13,200	2.98				20.3		19.8	6.9
AL 866		6X6				43.20	19,800	4.44				33.7		33.2	6.9
AL 1022	31.75	2X2	26.0	4.0	9.48	20.05	10,000	2.69	9.57	15.8	14.5	—	8.5	8.0	—
AL 1044		4X4				36.70	20,000	5.31				25.1		24.6	8.5
AL 1066		6X6				53.30	30,000	7.93				41.7		41.2	8.5
AL 1222	38.10	2X2	31.2	4.8	11.04	24.20	14,400	3.57	11.14	19.0	17.5	—	10.1	9.6	—
AL 1244		4X4				44.00	28,800	7.07				29.9		29.4	10.1
AL 1266		6X6				63.85	43,200	10.56				49.7		49.2	10.1
AL 1444	44.45	4X4	36.4	5.6	12.64	51.30	38,000	10.34	12.74	22.2	20.0	35.1	11.9	34.5	11.9
AL 1466		6X6				74.55	57,000	15.16				58.3		57.7	11.9
AL 1644	50.80	4X4	41.6	6.4	14.21	58.05	48,000	12.98	14.32	25.4	23.0	39.9	13.5	39.2	13.5
AL 1666		6X6				84.45	72,000	19.41				66.3		65.6	13.5
BL 423	12.70	2X3	12.0	2.0	5.06	12.95	2,400	0.84	5.13	6.3	6.3	—	4.4	6.5	—
BL 434		3X4				17.20	3,600	1.13				10.7		10.4	2.3
BL 446		4X6				23.60	4,800	1.65				17.1		16.8	4.4
BL 523	15.875	2X3	15.0	2.4	5.92	15.10	4,000	1.27	6.00	7.9	7.9	—	5.1	7.6	—
BL 534		3X4				20.10	6,000	1.69				12.5		12.2	2.6
BL 546		4X6				27.50	8,000	2.40				19.9		19.6	5.1
BL 623	19.05	2X3	18.1	3.2	7.88	19.75	6,500	2.04	7.97	9.5	9.5	—	6.9	10.3	—
BL 634		3X4				26.45	9,750	2.83				17.0		16.5	3.6
BL 646		4X6				36.50	13,000	4.01				27.0		26.5	6.9
BL 823	25.4	2X3	24.1	4.0	9.48	24.20	10,500	3.20	9.57	12.7	12.7	—	8.5	12.7	—
BL 834		3X4				32.55	15,800	4.44				21.0		20.5	4.4
BL 846		4X6				45.00	21,000	6.32				33.4		32.9	8.5
BL 1023	31.75	2X3	30.1	4.8	11.04	28.90	14,400	4.69	11.14	15.8	15.8	—	10.1	15.1	—
BL 1034		3X4				38.85	22,000	6.55				25.0		24.5	5.2
BL 1046		4X6				53.70	28,800	9.29				39.8		39.3	10.1
BL 1223	38.10	2X3	36.2	5.6	12.64	33.90	19,000	6.54	12.74	19.0	19.0	—	11.9	17.7	—
BL 1234		3X4				45.50	30,500	9.10				29.3		28.7	6.1
BL 1246		4X6				62.95	38,000	12.01				46.7		46.1	11.9
BL 1423	44.45	2X3	42.2	6.4	14.21	38.20	24,400	9.06	14.32	22.2	22.2	—	13.5	20.1	—
BL 1434		3X4				51.40	39,500	11.32				33.3		32.6	6.9
BL 1446		4X6				71.25	48,000	18.00				53.1		52.4	13.5
BL 1623	50.80	2X3	48.2	7.2	17.38	43.25	36,000	12.16	17.49	25.4	25.4	—	15.6	23.1	—
BL 1634		3X4				58.40	56,500	16.95				38.2		37.2	8.0
BL 1646		4X6				81.05	72,000	24.09				60.9		59.9	15.6

Selection of Leaf Chains

■ Selection Process

1. List the Conditions of Service.
   1) Chain Speed
   2) Repetition/1 day
   3) Acting Load

2. Decide types of Leaf Chain.
   AL Type: In Case of Repetition Less than 100 times a day Under Static Load.
   BL Type: In Case of 100 to 1,000 times of Repetition a Day Under Shock Condition.

3. Formula for the Size of Leaf Chain.
   Acting Load x Service Factor x Safety Factor = Proof Breaking Load.

■ Service Factor

Shock	Example	Service Factor	Type
Smooth Movement	For Laying Down Balance Weight	1.0	AL Type
Low Shock	Fork-Lift	1.3	AL Type or BL Type
High Shock	Mining Instrument. Constructing Machinery	1.5	BL Type

■ Safety Factor

	Chain Speed	Repetition	Safety Factor
AL Type	Less 30m/min	Less 10 Times /1 Day	9
		Less 100 Times /1 Day	12
BL Type	Less 30m/min	Less 1000 Times /1 Day	9

■ Clevis

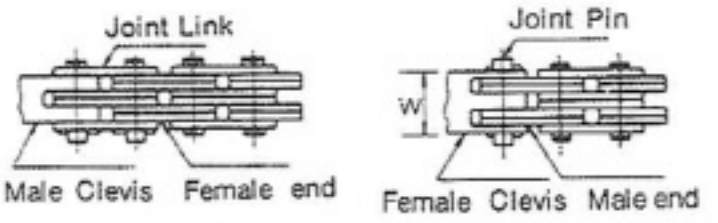

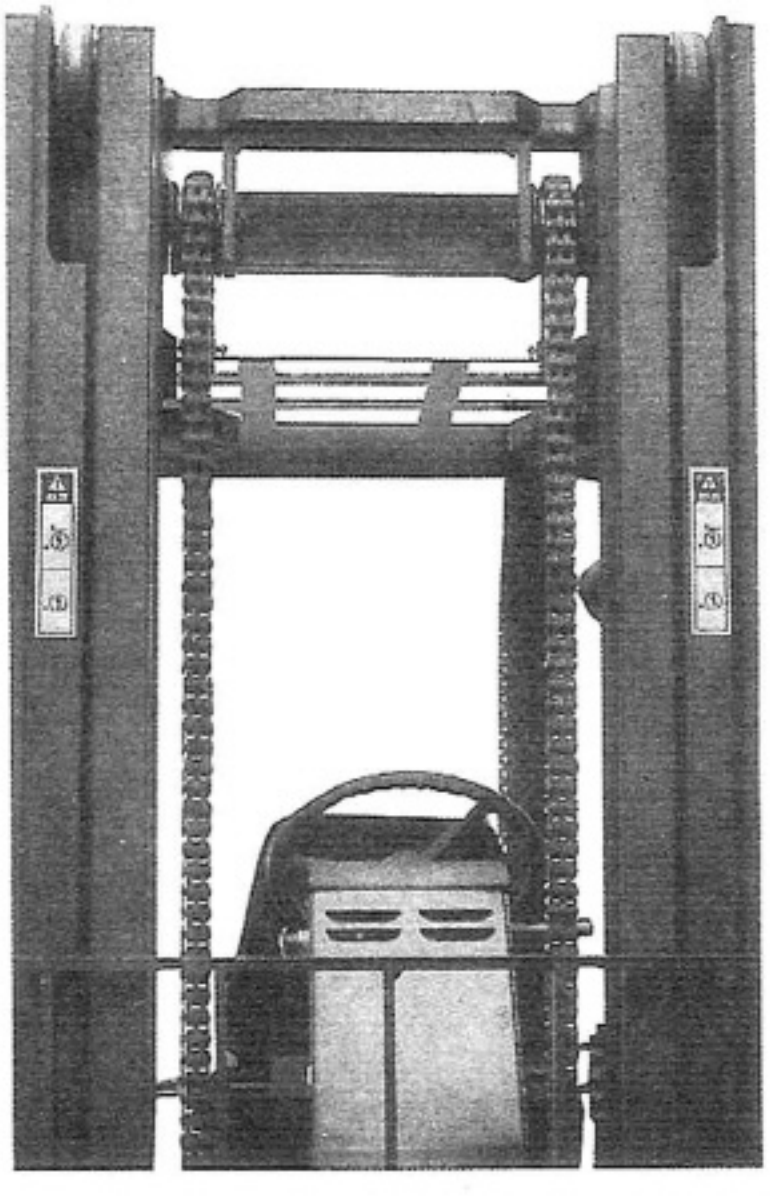

HC Conveyor Chains

1. Construction of Conveyor Chain

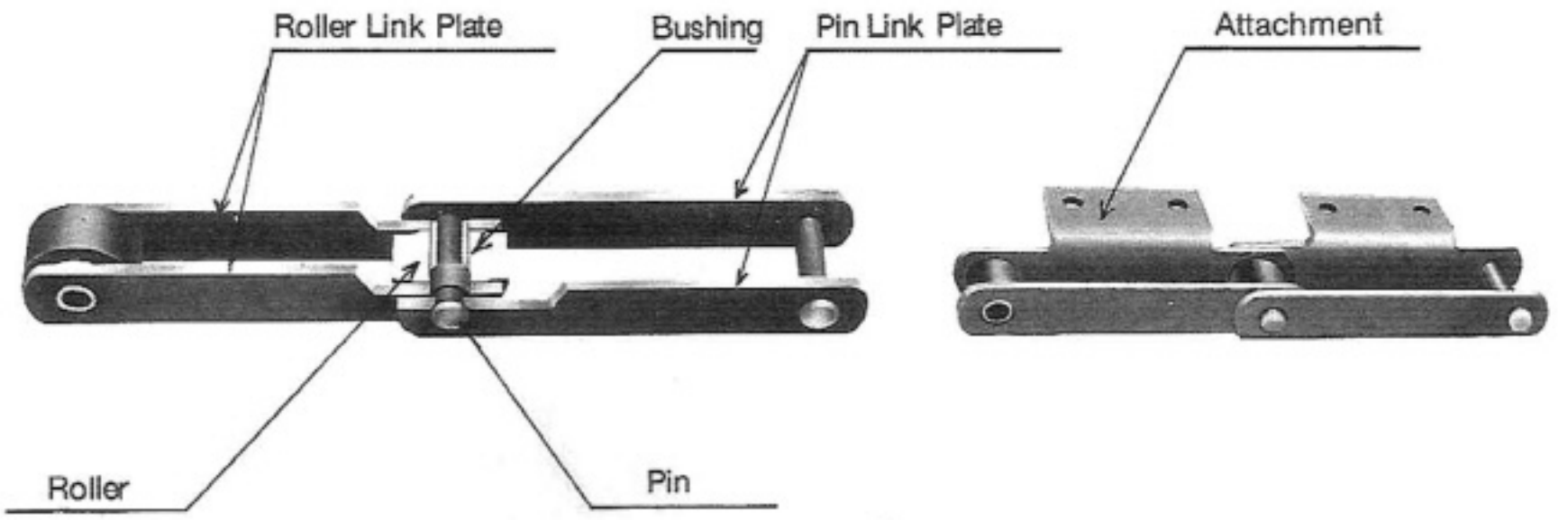

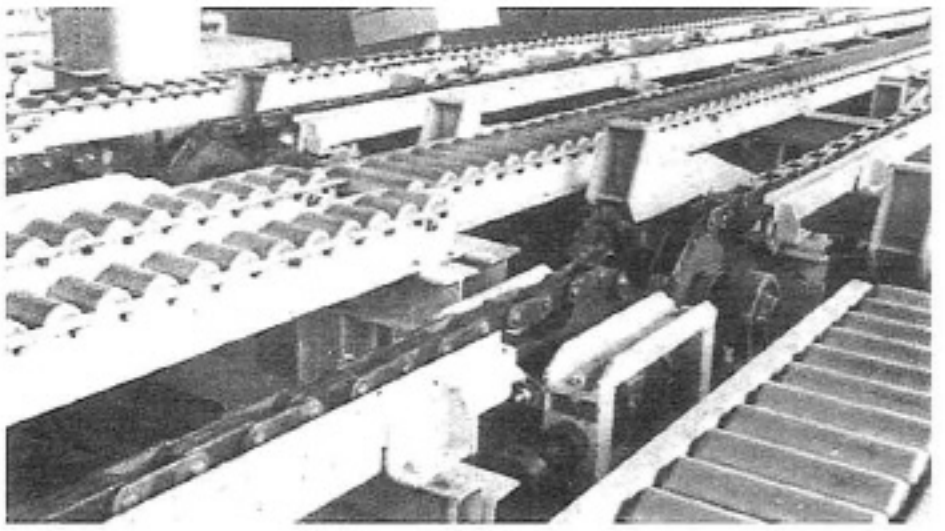

2. Types of Rollers & Attachments

R- Roller Type

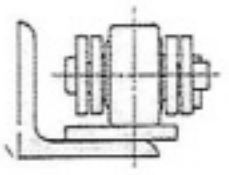

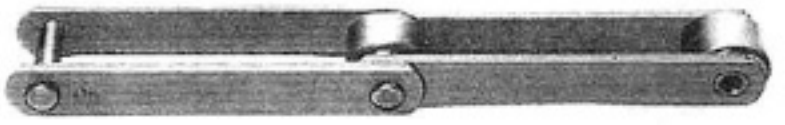

F- Roller Type

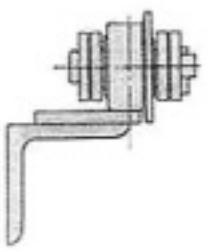

M- Roller Type

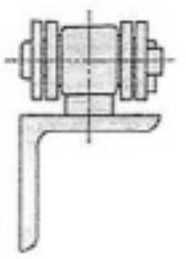

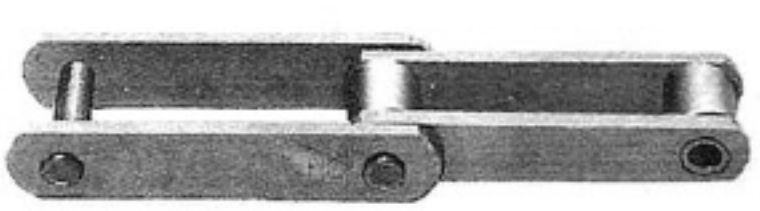

S- Roller Type

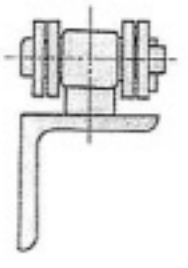

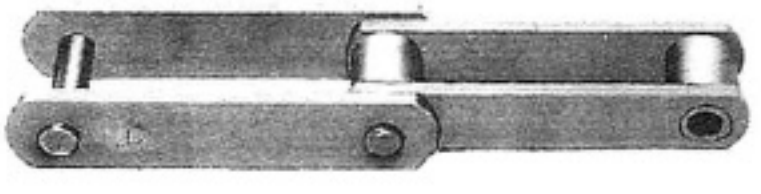

A- Attachment

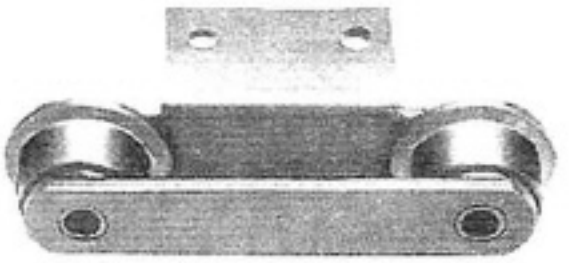

K- Attachment

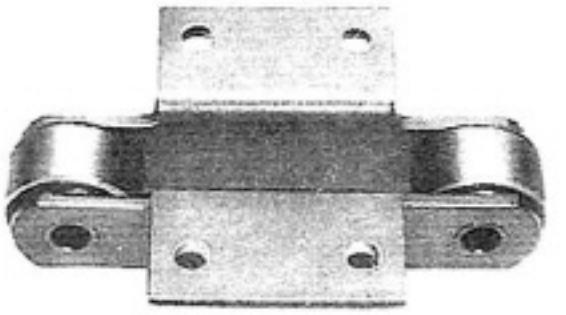

SA- Attachment

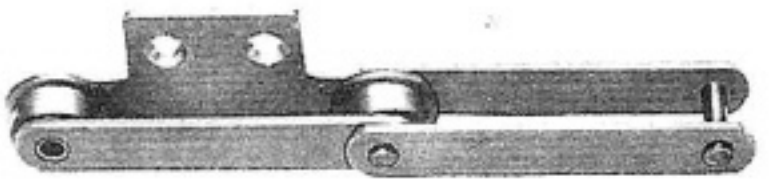

SK- Attachment

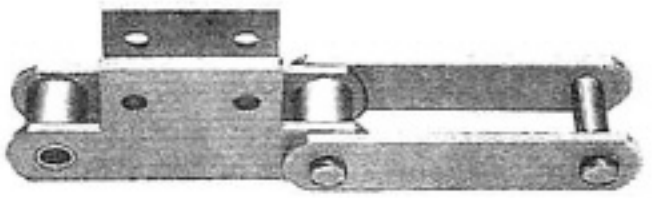

G2- Attachment

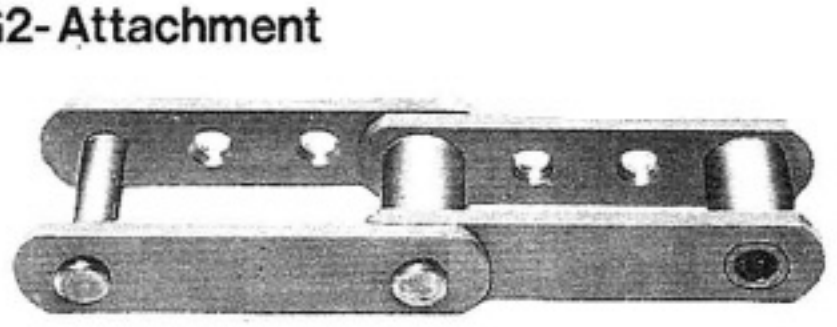

G4- Attachment

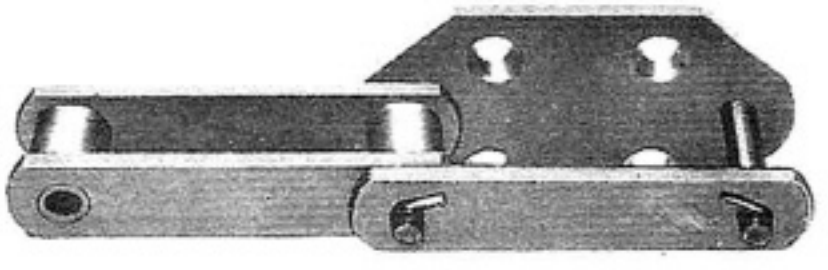

HC S(M)-Roller Conveyor Chains(RF-Type)

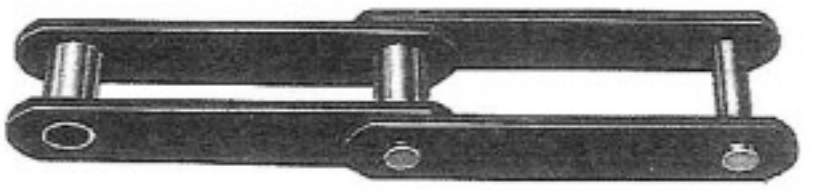

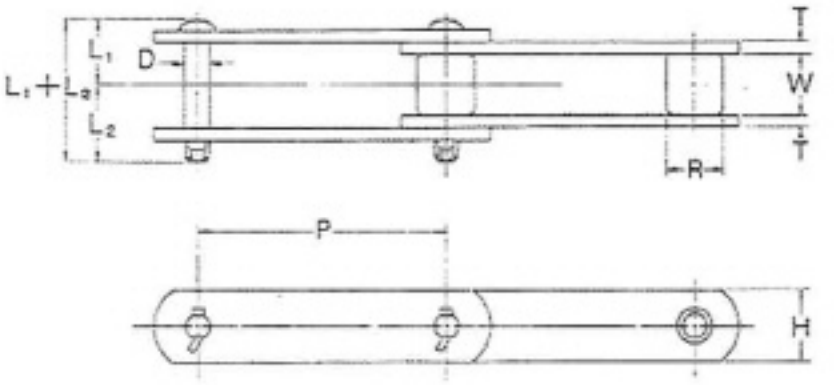

■Dimensions

Dimension:mm

Hc Chain No.	Pitch P	Roller Dia R	Inside Width W	Link Plate Height H	Link Plate Thickness T	Pin D	Pin C Pin L_1+L_2	Pin C Pin L_1	Pin C Pin L_2	Average Ultimate Strength (kg)	Average Weight (kg/m)
RF 03075−S RF 03100−S	75 100	15.9	16.1	22	3.2	8.0	38	18	20	3,000	1.9 1.7
RF 430−S	101.6	20.1	22.6	25.4	(4.8) (5.0)	9.7	55	25.5	19.5	5,500	3.0
RF 05075−S RF 05100−S RF 05150−S	75 100 150	22.2	22	32	4.5	11.3	53.5	24.5	29	7,000	4.2 3.7 3.2
RF 204−S	66.27	22.2	27	28.6	6.3 (6.0)	11.3	66	31	35	8,000	5.6
RF 450−S	101.6	22.2 (25.4)	27	28.6	6.3 (6.0)	11.3	66	31	35	8,000	4.6(4.8)
RF 08150−S	150	22.2 (25.4)	27	28.6	6.3 (6.0)	11.3	66	31	35	8,000	4.0(4.2)
RF 650−S(M)	152.4	25.8 (31.8)	30.2	38.1	6.3 (6.0)	11.3	69	32.5	36.5	8,000	6.0(6.4)
RF 10100−S(M) RF 10150−S(M)	100 150	29.0 (31.8)	30	38.1	6.3 (6.0)	14.5	73.5	33.5	40	11,500	6.8(7.1) 5.9(6.1)
RF 205−S	78.11	31.8	37.1	38.1	7.9	15.9	89	41.5	47.5	13,000	10.4
RF 214−S(M)	101.6	31.8(34.9)	31.6	38.1	7.9	15.9	89	39	45	13,000	8.7(9.1)
RF 6205−S(M)	152.4	34.9(38.1)	37.1	44.5	7.9	15.9	89	41.5	47.5	19,000	9.3(9.6)
RF 12200−S(M) RF 12250−S(M)	200 250	34.9 (38.1)	37.1	44.5	7.9	15.9	89	41.5	47.5	19,000	8.4(8.7) 7.8(8.0)
RF 212−S(M)	152.4	40.1 (44.5)	37.1	50.8	9.5 (10.0)	19.1	97.5	45	52.5	25,000	12.6(13.1)
RF 17200−S(M) RF 17250−S(M) RF 17300−S(M)	200 250 300	40.1 (44.5)	51.4	50.8	9.5 (10.0)	19.1	111.5	52	59.5	25,000	12.0(12.6) 11.1(11.6) 10.5(10.9)
RF 26200−S(M) RF 26250−S(M) RF 26300−S(M) RF 26450−S(M)	200 250 300 450	44.5 (50.8)	57.2	63.5	9.5 (10.0)	22.2	121	56	65	32,000	16.0(17.0) 14.7(15.5) 13.8(14.5) 12.4(12.9)
RF 36250−S(M) RF 36300−S(M) RF 36450−S(M) RF 36600−S(M)	250 300 450 600	50.8 (57.2)	66.7	76.2	12.7	25.4	145	68	77	48,500	24.4(25.5) 22.9(23.8) 20.2(20.8) 19.0(19.5)
RF 52300−S RF 52450−S RF 52600−S	300 450 600	57.2	77	76.2	16	31.8	175.5	82.5	93	51,000	29.7 26.2 24.4
RF 60300−N RF 60350−N RF 60400−N	300 350 400	70	77	90	12.7	35.0	160.5	77	83.5	51,000	31.0 18.8 27.7
RF 90350−N RF 90400−N RF 90500−N	350 400 500	85	88	110	16	42.0	189.5	89.5	100	80,500	42.4 40.8 38.1
RF 120400−N RF 120600−N	400 600	100	100	130	19	50.0	218.5	105.5	113	113,000	63.9 55.4

HC R-Roller Conveyor Chains

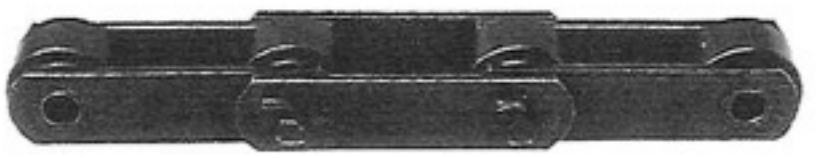

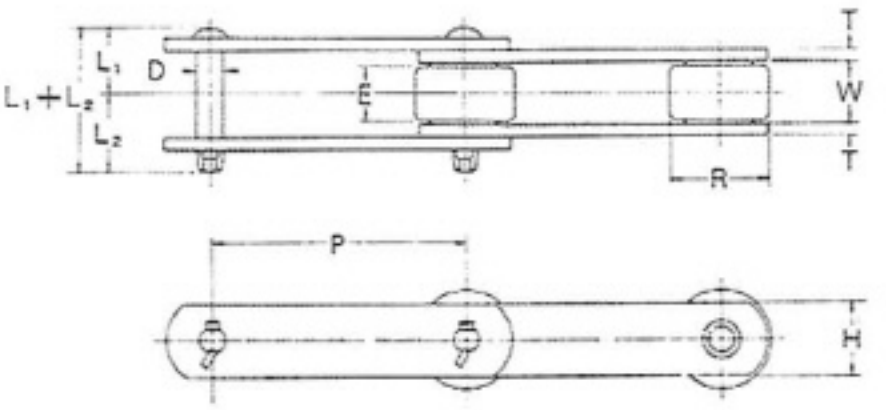

■ Dimensions

Dimension: mm

HC Chain No.	Pitch P	Roller R	Roller E	Inside Width W	Link Plate Height H	Link Plate Thickness T	Pin Dia D	C Pin L_1+L_2	C Pin L_1	C Pin L_2	Average Ultimate Strength(kg)	Average Weight (kg/m)
RF 03075−R	75	31.8	15.5	16.1	22	3.2	8.0	38	18	20	3.000	2.7
RF 03100−R	100											2.3
RF 430−R	101.6	38.1	19	22.6	25.4	4.8 (5.0)	9.7	55	25.5	29.5	5.500	4.3
RF 05100−R	100	40	19	22	32	4.5	11.3	53.5	24.5	29	7.000	5.0
RF 05150−R	150											4.1
RF 450−R	101.6	44.5	23	27	28.6	6.3 (6.0)	11.3	66	31	36	8.000	6.8
RF 08150−R	150	44.5	23	27	28.6	6.3 (6.0)	11.3	66	31	35	8.000	5.5
RF 650−R	152.4	50.8	26	30.2	38.1	6.3 (6.0)	11.3	69	32.5	36.5	8.000	7.7
RF 10100−R	100	50.8	27	30	38.1	6.3 (6.0)	14.5	73.5	33.5	40	11.500	9.8
RF 10150−R	150											7.9
RF 214−R	101.6	44.5	27	31.6	38.1	7.9	15.9	84	39	45	13.000	10.4
RF 6205−R	152.4	57.2	32	37.1	44.5	7.9	15.9	89	41.5	47.5	19.000	12.1
RF 12200−R	200	65	32	37.1	44.5	7.9	15.9	89	41.5	47.5	19.000	11.4
RF 12250−R	250											10.3
RF 212−R	152.4	69.9	32.5	37.1	50.8	9.5 (10.0)	19.1	97.5	45	52.5	25.000	17.1
RF 20200−R	200	75	40	44	50.8	9.5 (10.0)	19.1	105	48.5	56.5	25.000	16.4
RF 20300−R	300											13.5
RF 17200−R	200	80	44	51.4	50.8	9.5 (10.0)	19.1	111.5	52	59.5	25.000	18.8
RF 17250−R	250											16.5
RF 17300−R	300											15.0
RF 25200−R	200	85	44	49	63.5	9.5 (10.0)	22.2	113	52	61	32.000	22.9
RF 25300−R	300											18.5
RF 26250−R	250	100	50	57.2	63.5	9.5 (10.0)	22.2	121	56	65	32.000	25.3
RF 26300−R	300											22.3
RF 26450−R	450											18.0
RF 36300−R	300	125	56	66.7	76.2	12.7	25.4	145	68	77	48.500	39.0
RF 36450−R	450											30.7
RF 36600−R	600											26.9
RF 52300−R	300	140	65	77	76.2	16	31.8	175.5	82.5	93	51.000	48.8
RF 52450−R	450											37.5
RF 52600−R	600											32.9
RF 60300−R	300	140	68	77	90	12.7	35.0	160.5	77	83.5	51.000	52.4
RF 60350−R	350											47.2
RF 60400−R	400											43.8
RF 90400−R	400	170	76	88	110	16	42.0	189.5	89.5	100	80.500	66.9
RF 90500−R	500											59.0
RF 120400−R	400	200	87	100	130	19	50.0	218.5	105.5	113	113.000	105.7
RF 120600−R	600											83.3

HC F-Roller Type Chains

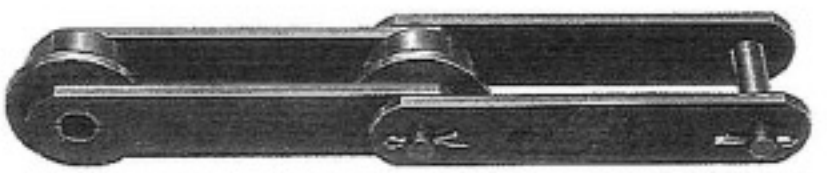

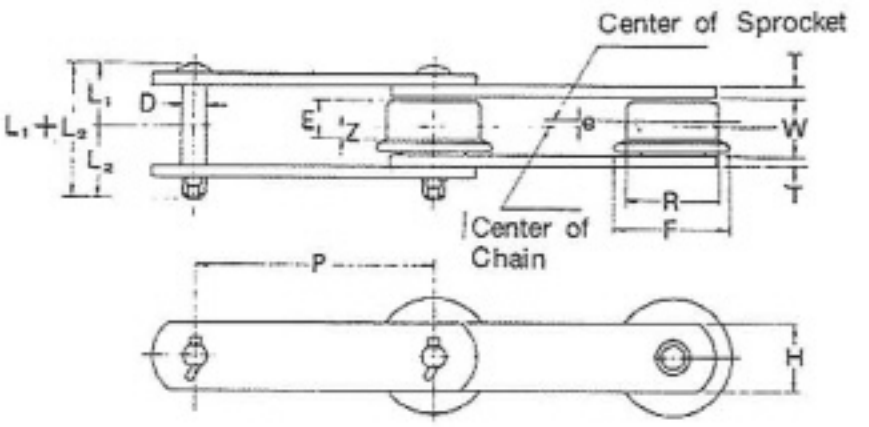

■ Dimensions

Dimension:mm

HC Chain No.	Pitch P	Roller					Inside Width W	Link Plate		Pin				Average Ultimate Strength (kg)	Average Weight (kg/m)
		Dia R	Flange F	E	e	Z		Height H	T	Dia D	C Pin				
											L_1+L_2	L_1	L_2		
RF 03075−F	75	31.8	42	12	1.8	4.3	16.1	22	3.2	8.0	38	18	20	3.000	2.8
RF 03100−F	100														2.4
RF 05100−F	100	40	50	14	2.5	4.5	22	32	4.5	11.3	53.5	25	28.5	7.000	5.2
RF 05150−F	150														4.2
RF 450−F	101.6	44.5	55	20	3	7	30.2	28.6	6.3 (6.0)	11.3	69	32.5	36.5	8.000	7.5
RF 08150−F	150	44.5	55	20	3	7	30.2	28.6	6.3 (6.0)	11.3	69	32.5	36.5	8.000	5.8
RF 650−F	152.4	50.8	65	20	3	7	30.2	38.1	6.3 (6.0)	11.3	69	32.5	36.5	8.000	8.0
RF 10150−F	150	50.8	65	20	3	7	30	38.1	6.3 (6.0)	14.5	73.5	33.5	40	11.500	8.1
RF 6205−F	152.4	57.2	70	25	3.5	9	37.1	44.5	7.9	15.9	89	41.5	47.5	19.000	12.4
RF 12200−F	200	65	80	24	4	8	37.1	44.5	7.9	15.9	89	41.5	47.5	19.000	11.9
RF 12250 F	250														19.6
RF 20200−F	200	75	95	30	5	0	44	50.8	9.5 (10.0)	19.1	105	48.5	56.5	25.000	17.4
RF 20300−F	300														14.2
RF 17200−F	200	80	100	34	5	12	51.4	50.8	9.5 (10.0)	19.1	111.5	52	59.5	25.000	19.8
RF 17250−F	250														17.3
RF 17300−F	300														15.7
RF 25200−F	200	85	100	34	5	12	49	63.5	9.5 (10.0)	22.2	113	52	61	32.000	23.9
RF 25300−F	300														19.1
RF 26250−F	250	100	125	38	6	13	57.2	63.5	9.5 (10.0)	22.2	121	56	65	32.000	26.2
RF 26300−F	300														23.6
RF 26450−F	450														18.9
RF 35300−F	300	100	125	40	6	14	59	76.2	9.5	25.4	125	58	66.5		26.8
RF 36300−F	300	125	170	42	7	14	66.7	76.2	12.7	25.4	145	68	77	48.500	40.1
RF 36450−F	450														31.9
RF 36600−F	600														27.8
RF 52300−F	300	140	170	49	8	16.5	77	76.2	16	31.8	175.5	82.5	93	51.000	52.5
RF 52450−F	450														39.3
RF 52600−F	600														34.3
RF 60300−F	300	140	170	49	8	16.5	77	90	12.7	35.0	160.5	77	83.5	51.000	55.1
RF 60350−F	350														49.5
RF 60400−F	400														45.8
RF 90400−F	400	170	205	56	10	18	88	110	16	42.0	189.5	89.5	100	80.500	71.6
RF 90500−F	500														62.8
RF 120600−F	600	200	250	64	11.5	20.5	100	130	19	50.0	218.5	105.5	113	113.000	88.0

Introduction

HC Conveyor Chains (P.47~49)

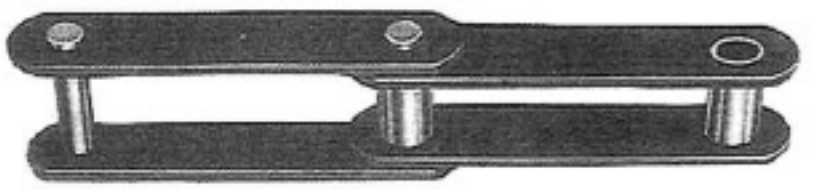

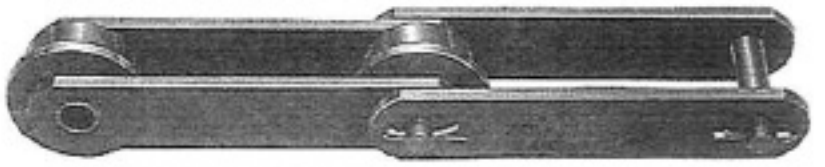

HC Attachment Conveyor Chains
(P.50~51)

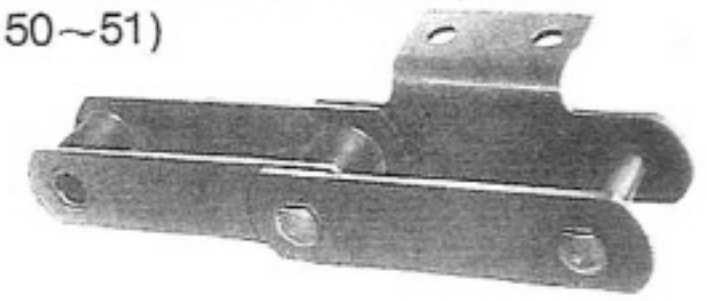

HC B-Type Bucket Elevator Chains
(P.60~61)

HC RF-Type Flow Chains (P.62~65)

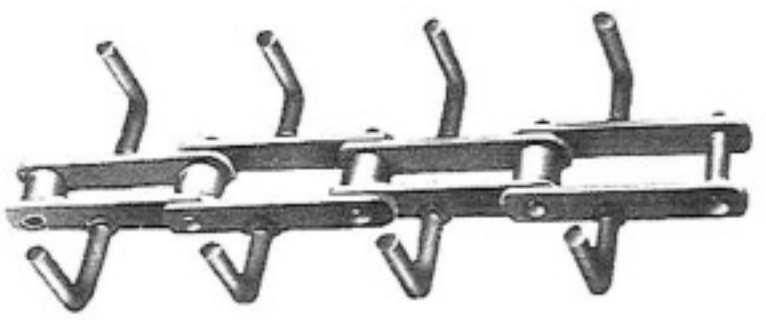

HC F-Side Roller Conveyor Chains
(P.66)

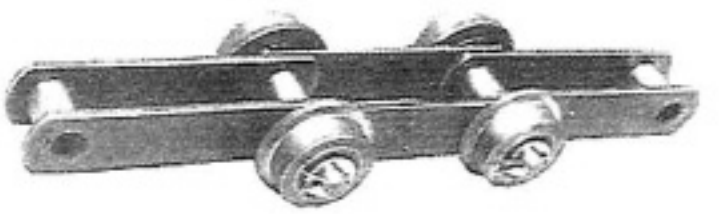

HC Top-Roller Conveyor Chains
(P.66)

HC Z-Type Trolley Conveyor Chains
(P.72)

HC Tower Parking Chains
(P.69)

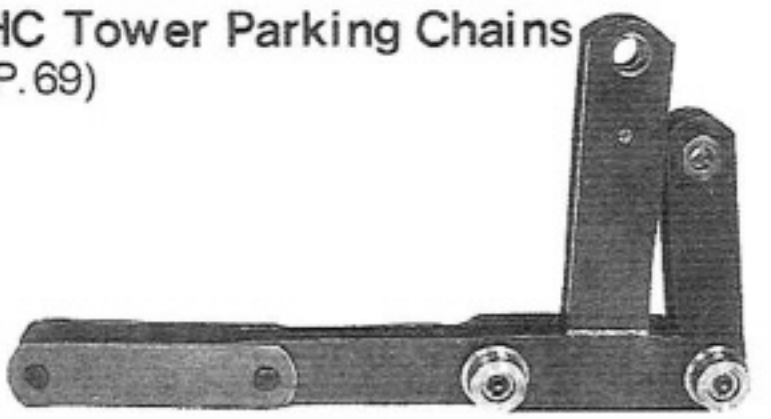

HC Standard Conveyor Chain Attachment (All Series) Dimensions

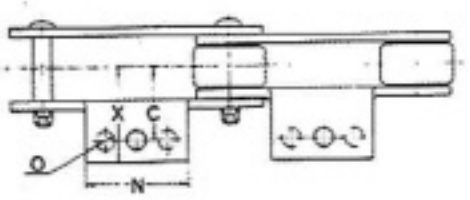

A-1 Attachment

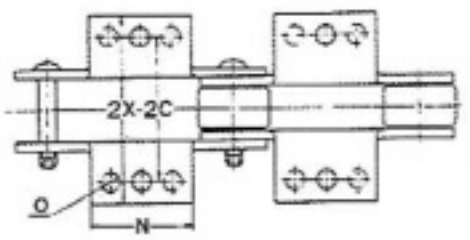

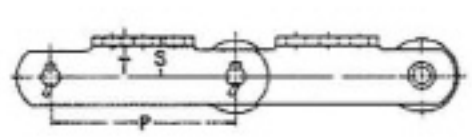

K-1 Attachment

■A-1,K-1 Attachments

Dimension:mm

HC Chain No.		P	S	C	2C	X	2X	N	T	O	Jointing bolt	Additional Weight (kg)
Chain No.	Types of Roller											
RF 03075	R.F.S	75	20	30	60	46	92	55	3.2	10	M8	0.05
RF 03100	R.F.S	100						65				0.06
RF 430	R.S	101.6	22	40	80	54	108	70	4.8〈5.0〉	12	M10	0.11
RF 05075	S	75	22	35	70	52	104	55	4.5	10	M8	0.03
RF 05100	R.F.S	100						65				0.08
RF 05150	R.S.S	150						85				0.10
RF 204	S	66.27	24	45	90	59	118	35	6.3〈6.0〉	12	M10	0.08
RF 450	R.F.S.M	101.6	28	50	100	64	128	70	6.3〈6.0〉	12	M10	0.18
RF 08150	R.F.S.M	150	28	50	100	64	128	90	6.3〈6.0〉	12	M10	0.22
RF 650	R.F.S.M	152.4	32	50	100	64	128	90	6.3〈6.0〉	12	M10	0.22
RF 10100	R.S.M	100	28	50	100	65	130	70	6.3〈6.0〉	12	M10	0.16
RF 10150	R.F.S.M	150						90				0.20
RF 214	R.S.M	101.6	35	55	110	73	146	80	7.9	15	M12	0.28
RF 6205	R.F.S.M	152.4	38	60	120	79	158	100	7.9	15	M12	0.37
RF 12200	R.F.S.M	200	38	60	120	79	158	120	7.9	15	M12	0.45
RF 12250	R.F.S.M	250						165				0.62
RF 212	R.S.M	152.4	45	65	130	83	166	100	9.5〈10.0〉	15	M12	0.49
RF 17200	R.F.S.M	200	45	75	150	98	196	120	9.5〈10.0〉	15	M12	0.66
RF 17250	R.F.S.M	250						165				0.79

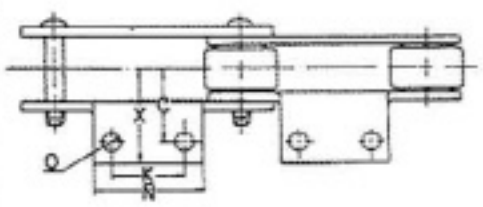

A-2 Attachment

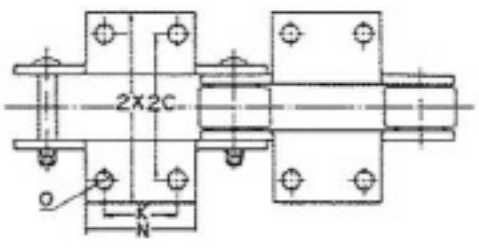

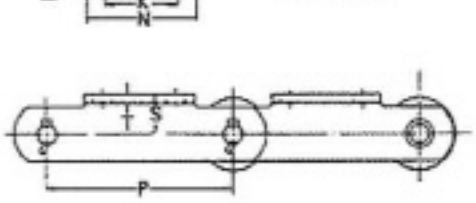

K-2 Attachment

■A-2,K-2 Attachments

Dimension:mm

HC Chain No.		P	S	C	2C	X	2X	N	K	T	O	Jointing bolt	Additional Weight (kg)
Chain No.	Types of Roller												
RF 03075	R.F.S	75	20	30	60	46	92	55	30	3.2	10	M8	0.05
RF 03100	R.F.S	100						65	40				0.06
RF 430	R.S	101.6	22	40	80	54	108	70	40	4.8〈5.0〉	12	M10	0.11
RF 05075	S	75	22	35	70	52	104	55	30	4.5	10	M8	0.07
RF 05100	R.F.S	100						65	40				0.08
RF 05150	R.S.S	150						85	60				0.10
RF 450	R.F.S.M	101.6	28	50	100	64	128	70	40	6.3〈6.0〉	12	M10	0.18
RF 08150	R.F.S.M	150	28	50	100	64	128	90	60	6.3〈6.0〉	12	M10	0.22
RF 650	R.F.S.M	152.4	32	50	100	64	128	90	60	6.3〈6.0〉	12	M10	0.22
RF 10100	R.S.M	100	28	50	100	65	130	70	40	6.3〈6.0〉	12	M10	0.16
RF 10150	R.F.S.M	150						90	60				0.20
RF 214	R.S.M	101.6	35	55	110	73	146	80	40	7.9	15	M12	0.28
RF 205	S	78.11	35	60	120	75	150	65	30	7.9	12	M10	0.23
RF 6205	R.F.S.M	152.4	38	60	120	79	158	100	60	7.9	15	M12	0.37
RF 12200	R.F.S.M	200	38	60	120	79	158	120	80	7.9	15	M12	0.45
RF 12250	R.F.S.M	250						165	125				0.62
RF 212	R.S.M	152.4	45	65	130	83	166	100	60	9.5〈10.0〉	15	M12	0.49
RF 17200	R.F.S.M	200	45	75	150	98	196	120	80	9.5〈10.0〉	15	M12	0.66
RF 17250	R.F.S.M	250						165	125				0.79

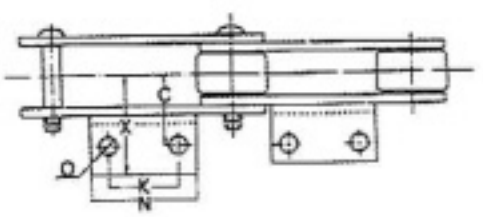

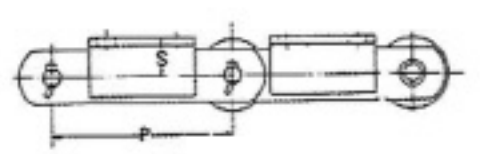

A-2 Attachment(Welded)

■A-2 Attachments(Welded)

Dimension:mm

HC Chain No.		P	S	C	X	K	N	O	Used Angle	Jointing bolt	Additional Weight (kg)
Chain No.	Types of Roller										
RF 17300	R.F.S.M	300	45	75	110.5	180	220	15	L 65×65×6	M12	1.54
RF 26300	R.F.S.M	300	55	80	123.5	180	220	15	L 75×75×9	M12	2.22
RF 60300	R.F.N	300	90	115	165	110	170	24	L100×100×13	M20	3.30
RF 90350	N	350	100	140	210	100	180	28	L 30×130×15	M24	5.20
RF 90400	R.F.N	400				150	230				6.60
RF120400	R.N	400	120	150	220	120	200	28	L130×130×15	M24	5.80

HC Standard Conveyor Chain Attachment(All Series) Dimensions

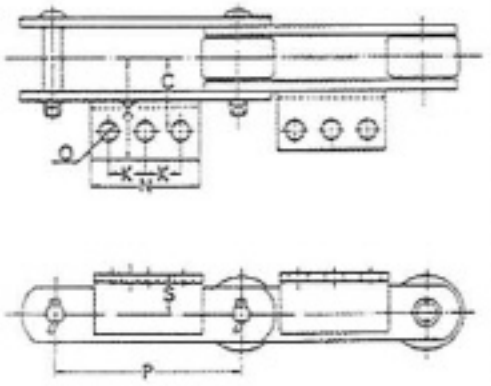

A-3 Attachment(Welded)

■ A-3 Attachment(Welded)

HC Chain No.		P	S	C	X	K	N	O	Used Angle	Jointing bolt	Additional Weight (kg)
Chain No.	Type of Roller										
RF 26450	R.F.S.M	450	55	80	123.5	140	320	15	L 75×75×9	M12	3.26
RF 36450	R.F.S.M	450	70	100	160	140	330	19	L100×100×10	M16	5.07
RF 36600	R.F.S.M	600				180	410				6.26
RF 52450	R.F	450	80	120	171.4	140	330	24	L100×100×13	M20	6.30
RF 52600	R.F	600				180	410				7.80
RF 60350	R.F.N	350	90	115	165	80	220	24	L100×100×13	M20	4.20
RF 60400	R.F.N	400				100	260				6.00
RF 90500	R.F.N	500	100	140	210	130	340	28	L130×130×15	M24	9.80
RF120600	R.F.N	600	220	150	220	160	400	28	L130×130×15	M24	11.50

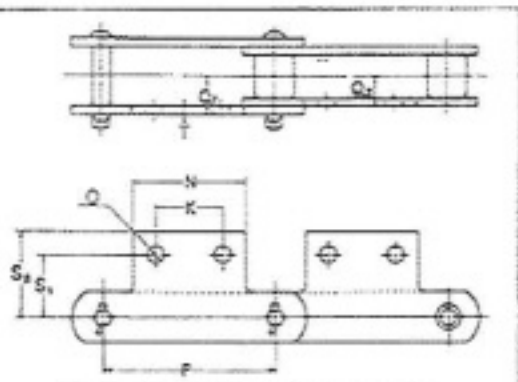

SA-2 Attachment

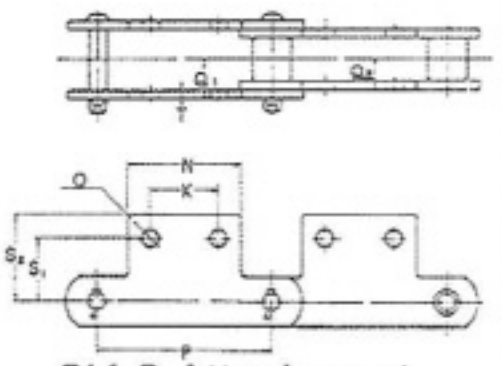

SK-2 Attachment

■ SA-2, SK-2 Attachment

HC Chain No.		P	S_1	S_2	Q_1	Q_2	K	N	T	O	Jointing bolt	Additional Weight (kg)
Chain No.	Types of Roller											
RF 03075	R.S	75	33	49	15.5	11.5	30	55	3.2	10	M8	0.05
RF 03100	R.S	100					40	65				0.06
RF 430	R.S	101.6	37.6	51.6	22〈22.5〉	16〈16.5〉	40	70	4.8〈5.0〉	12	M10	0.11
RF 05100	R.S	100	33.4	50.7	21	15.5	40	65	4.5	10	M8	0.08
RF 05150	R.S	150					60	85				0.10
RF 450	R.S.M	101.6	47.6	60.7	27〈26.5〉	20〈19.5〉	40	70	6.3〈6.0〉	12	M10	0.18
RF 08150	R.S.M	150	46.1	58.7	27〈26.5〉	20〈19.5〉	60	90	6.3〈6.0〉	12	M10	0.22
RF 650	R.S.M	152.4	50	63	28.5〈28〉	21.5〈21〉	60	90	6.3〈6.0〉	12	M10	0.22
RF 10100	R.S.M	100	46.1	61	28.5〈28〉	21.5〈21〉	40	70	6.3〈6.0〉	12	M10	0.16
RF 10150	R.S.M	150					60	90				0.20
RF 214	R.S.M	101.6	50	70	32.5	23.5	40	80	7.9	15	M12	0.28
RF 6205	R.S.M	152.4	55	75.7	35.5	26.5	60	100	7.9	15	M12	0.37
RF 12200	R.S.M	200	55	75.7	35.5	26.5	80	120	7.9	15	M12	0.45
RF 12250	R.S.M	250					125	165				0.62
RF 212	R.S.M	152.4	60	83.6	38〈39.5〉	28〈28.5〉	60	100	9.5〈100〉	15	M12	0.49

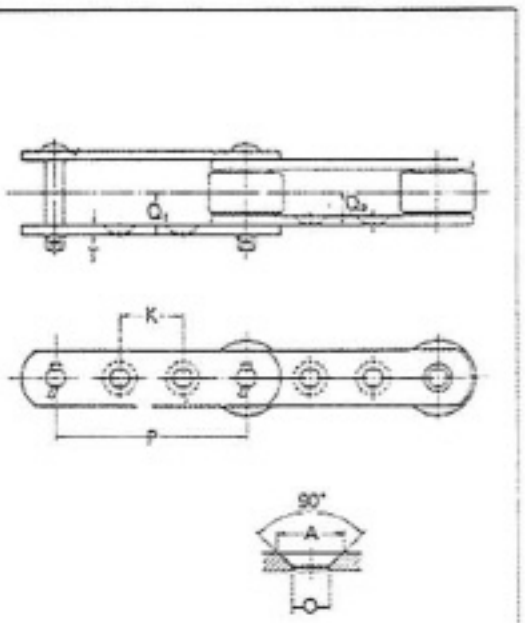

G-2 Attachment

■ G-2 Attachment

HC Chain No.		P	K	T	Q_1	Q_2	A	O	Length of Bolt		Jointing bolt
Chain No.	Types of Roller								Pin Link	Roller Link	
RF 05100	R.S	100	40	4.5	21	15.5	15	10	36	26	M8
RF 05150	R.F.S	150	60								
RF 650	R.F.S.M	152.4	60	6.3〈6〉	28.5〈28〉	21.5〈21〉	20	12	49	35	M10
RF 10100	S.M	100	30	6.3〈6〉	28.5〈28〉	21.5〈21〉	20	12	49	35	M10
RF 10150	R.F.S.M	150	60								
RF 6205	R.F.S.M	152.4	50	7.9	35.5	26.5	26	15	63	45	M12
RF 12200	R.F.S.M	200	80	7.9	35.5	26.5	26	15	63	45	M12
RF 12250	R.F.S.M	250	125								
RF 17200	R.F.S.M	200	70	9.5〈10.0〉	45.5〈46.5〉	35〈35.5〉	26	15	81	61	M12
RF 17250	R.F.S.M	250	110								
RF 17300	R.F.S.M	300	150								
RF 26300	R.F.S.M	300	140	9.5〈10.0〉	48〈49〉	38〈38.5〉	26	15	88	67	M12
RF 26450	R.F.S.M	450	220								
RF 36450	R.F.S.M	450	220	12.7	59.5	46	32	19	105	75	M16
RF 36600	R.F.S.M	600	300								
RF 52450	R.F.S	450	200	16	71.5	45.5	38	24	125	90	M20
RF 52600	R.F.S	600	300								

HC VB-Type Conveyor Chains for Automobile Manufacturing Line

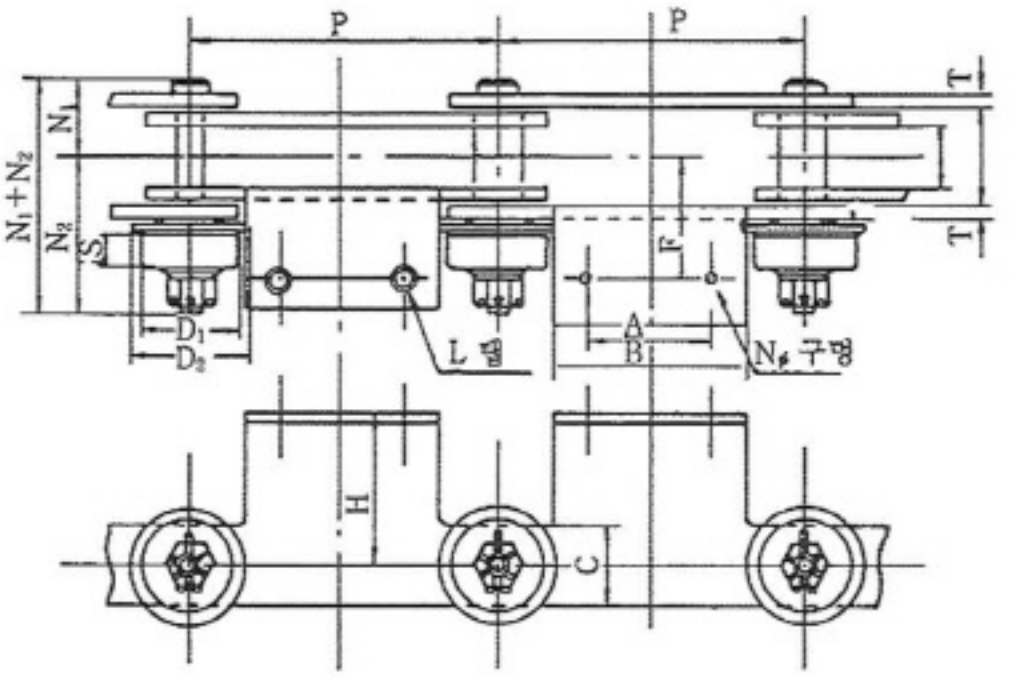

HC Chain No.	Pitch P	Bearing				Link Plate		Pin		Attachments						Average Weight (kg/m)	Average Ultimate Strength (kg.f)
			Dia	Dia	Jointing Width	Height	Thickness	Length	Dia								
		E	D_1	D_2	S	C	T			A	B	L	K	F	H		
HK 7100VB	100	37.5	45	55	16	32	6	96	12	40	65	M8	10	50	70	10.4	7.800
HK 7125VB	125									40	60					8.7	
HK 7150VB	150									60	85					8.6	
HK 7200VB	200									80	135					8.3	
HK 7004VB	101.6									40	66.6					10.5	
HK 7005VB	127.0									40	62.0					8.8	
HK 7006VB	152.4									60	87.4					8.3	
HK 7008VB	203.2									80	138.2					8.4	
HK13150VB	150	45.5	52	66	18	38	7	116	15.4	60	96	M10	12	60	75	13.0	15.000
HK13200VB	200									80	140					12.1	
HK13250VB	250									140	190					11.5	
HK13006VB	152.4									60	98.4					12.9	
HK13008VB	203.2									80	143.2					12.0	
HK13010VB	254.0									140	194.0					11.5	
HK20200VB	200	56.6	68	84	25	50	9	138	21	80	130	M10	12	60	80	18.6	24.000
HK20250VB	250									140	180					18.5	
HK20300VB	300									180	230					17.8	
HK20008VB	203.2									80	133.2					18.6	
HK20010VB	254.0									140	184.0					17.5	
HK20012VB	304.8									180	234.8					17.3	

HC FB Type Conveyor Chains for Automobile Manufacturing Line

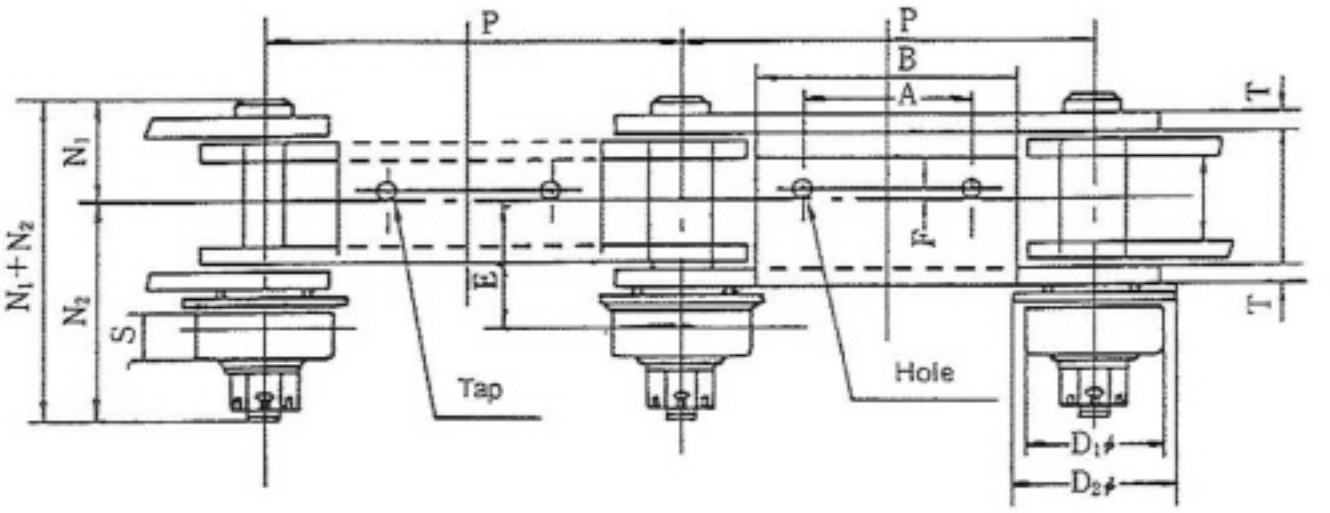

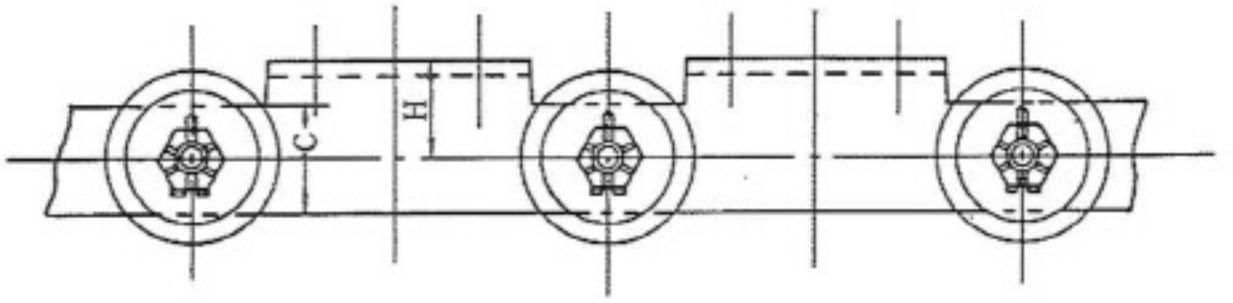

Dimension: mm

HC Chain No.	Pitch P	Bearing				Link Plate		Pin		Attachment						Average Weight (kg/m)	Average Ultimate Strength (kg.f)
			Dia		Jointing Width	Height	Thickness	Length	Dia								
		E	D_1	D_2	S	C	T			A	B	L	K	F	H		
HK 7100FB	100	37.5	45	55	16	32	6	96	12	40	65	M8	10	2.5	25	8.6	7,800
HK 7125FB	125									40	60					7.6	
HK 7150FB	150									60	85					7.1	
HK 7200FB	200									80	135					6.6	
HK 7004FB	101.6									40	66.6					8.4	
HK 7005FB	127.0									40	62.0					7.5	
HK 7006FB	152.4									60	87.4					6.8	
HK 7008FB	203.2									80	138.2					6.7	
HK13150FB	150	45.5	52	66	18	38	7	116	15.4	60	96	M8	12	2.5	35	11.4	15,000
HK13200FB	200									80	140					10.2	
HK13250FB	250									140	190					9.4	
HK13006FB	152.4									60	98.4					11.4	
HK13008FB	203.2									80	143.2					10.6	
HK13010FB	254.0									140	194.0					9.4	
HK20200FB	200	56.6	68	84	25	50	9	138	21	80	130	M10	12	2.5	45	18.3	24,000
HK20250FB	250									140	180					16.9	
HK20300FB	300									180	230					16.0	
HK20008FB	203.2									80	133.2					18.3	
HK20010FB	254.0									140	184.0					17.0	
HK20012FB	304.8									180	234.8					16.0	

HC R Type Conveyor Chains for Automobile Manufacturing Line

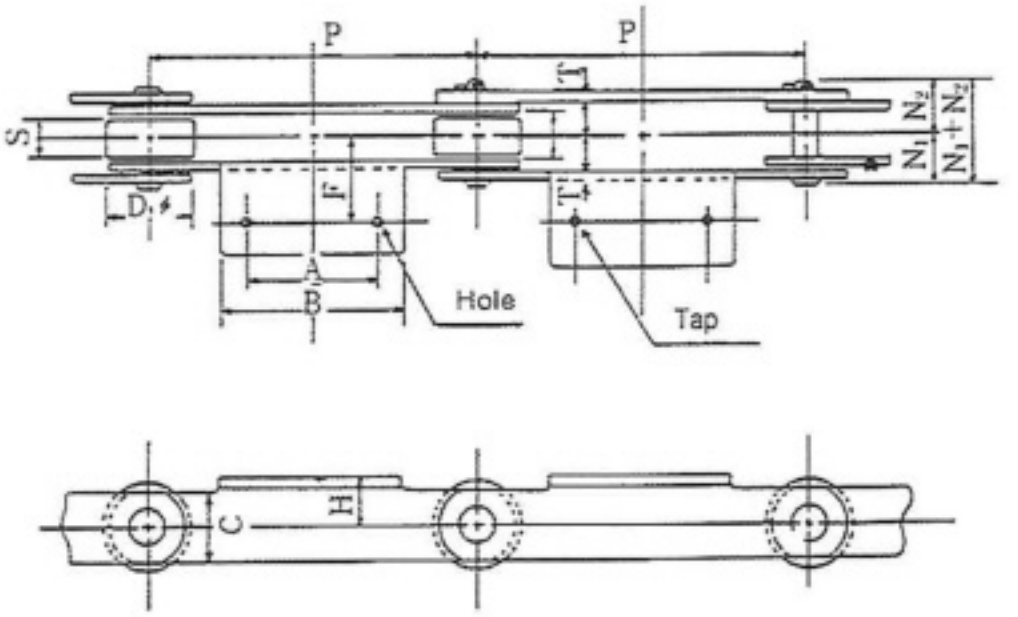

Dimension:mm

HC Chain No.	Pitch P	Roller		Link Plate		Pin		Attachments						Average Weight (kg/m)	Average Ultimate Strength (kg.f)
		Dia D	Jointing Width S	Height C	Thickness T	N_1+N_2	Dia	A	B	L	K	F	H		
HK 3100R	100	30	16	23	3.2	37.2	8								
	125							40	65	M8	10	30	16	2.6	3.000
	150														
HK 5100R	100	40	19	32	4.5	54	11	40	65	M8	10	40	22	6.7	5.000
HK 5125R	125							40	60					5.6	
HK 5150R	150							60	85					4.8	
HK 5200R	200							80	135					4.0	
HK 5004R	101.6							40	66.6					6.6	
HK 5005R	127.0							40	62.0					5.7	
HK 5006R	152.4							60	87.4					5.3	
HK 5008R	203.2							80	138.2					4.8	
HK 7100R	100	45	22	32	6	64	12	40	65	M8	10	41	25	7.9	7.800
HK 7125R	125							40	60					7.0	
HK 7150R	150							60	85					7.0	
HK 7200R	200							80	135					6.2	
HK 7004R	101.6							40	66.6					7.6	
HK 7005R	127.0							40	62.0					7.0	
HK 7006R	152.4							60	87.4					6.3	
HK 7008R	203.2							80	138.2					6.3	
HK13150R	150	48	27.4	38	7	78.5	15.4	60	96	M8	10	49	32	11.5	15.000
HK13200R	200							80	148					10.3	
HK13250R	250							140	198					9.4	
HK13006R	152.4							60	100.4					11.4	
HK13008R	203.2							80	151.2					10.1	
HK13010R	254.0							140	202					9.4	
HK20200R	200	65	32.5	50	9	100	21	80	130	M10	12	60	45	17.2	24.000
HK20250R	250							140	180					16.0	
HK20300R	300							180	230					15.3	
HK20008R	203.2							80	133.2					17.2	
HK20010R	254.0							140	184.0					16.1	
HK20012R	304.8							180	234.8					15.2	

HC F Type Conveyor Chains for Automobile Manufacturing Line

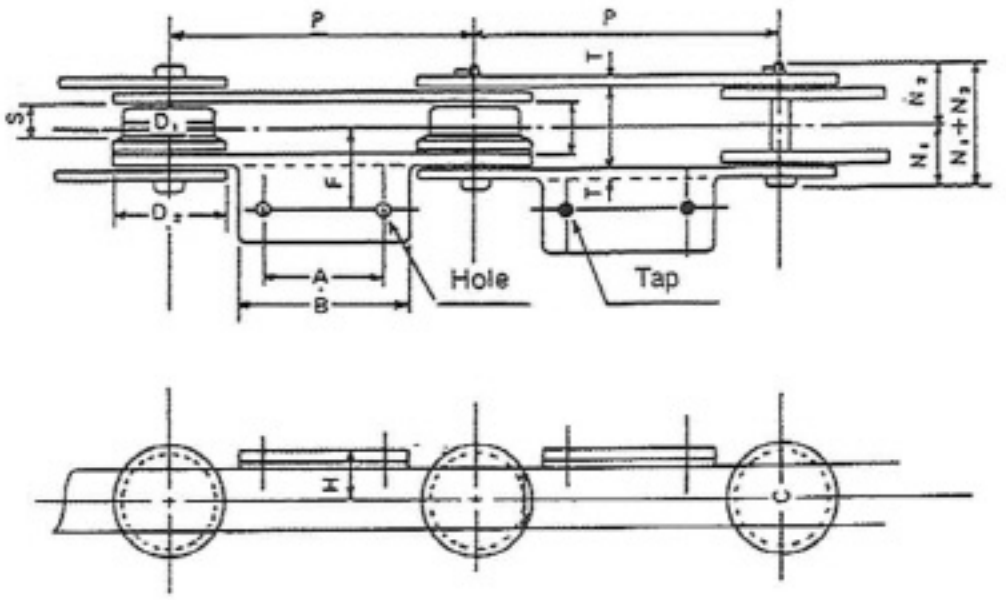

Dimension: mm

HC Chain No.	Pitch P	Roller			Link Plate		Pin		Attachments						Average Weight (kg/m)	Average Ultimate Strength (kg.f)
		Dia D_1	Jointing Width D_2	S	Height C	Thickness T	Length	Dia	A	B	L	K	P	H		
HK 3100F	100	30	40	12	23	3.2	37.2	8	40	65	M8	10	30	16	3	3.000
HK 5100F	100	40	50	14	32	4.5	54	11	40	65	M8	10	40	22	7	5.000
HK 5125F	125								40	60					5.8	
HK 5150F	150								60	85					5.0	
HK 5200F	200								80	13.5					4.2	
HK 5004F	101.6								40	66.6					6.9	
HK 5005F	127.0								40	62.0					5.9	
HK 5006F	152.4								60	87.4					5.5	
HK 5008F	203.2								80	138.2					4.9	
HK 7100F	100	45	55	16	32	6	64	12	40	65	M8	10	41	25	8.1	7.800
HK 7125F	125								40	60					7.2	
HK 7150F	150								60	85					7.2	
HK 7200F	200								80	135					6.4	
HK 7004F	101.6								40	66.6					7.9	
HK 7005F	127.0								40	62.0					7.2	
HK 7006F	152.2								60	87.4					6.5	
HK 7008F	203.4								80	138.2					6.5	
HK13150F	150	48	60	19.7	38	7	78.5	15.4	60	96	M8	10	49	32	11.7	15.000
HK13200F	200								80	148					10.4	
HK13250F	250								140	198					9.5	
HK13006F	152.4								60	100.4					11.6	
HK13008F	203.2								80	151.2					10.2	
HK13010F	254.0								140	202					9.6	
HK20200F	200	65	80	23.9	50	9	100	21	80	130	M10	12	60	45	17.6	24.000
HK20250F	250								140	180					16.3	
HK20300F	300								180	230					15.3	
HK12008F	203.2								80	133.2					17.5	
HK20010F	254.0								140	184.0					16.3	
HK20012F	304.8								180	234.8					15.4	

HC WB Type Conveyor Chains for Automobile Manufacturing Line

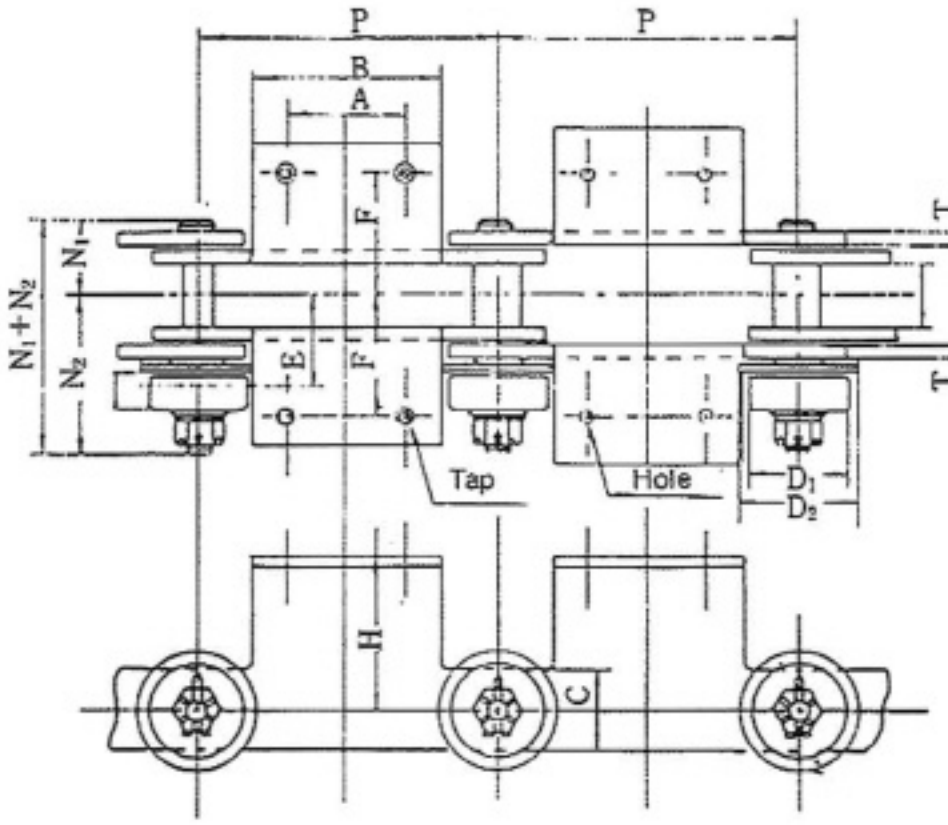

Dimension: mm

HC Chain No.	Pitch P	Bearing				Link Plate		Pin		Attachments						Average Weight (kg/m)	Average Ultimate Strength (kg.f)
		Dia			Jointing Width S	Height C	Thickness T	Lenth	Dia								
		E	D	D_2						A	B	L	K	F	H		
HK 7100WB	100	37.5	45	55	16	32	6	96	12	40	65	M8	10	50	70	13.4	7,800
HK 7125WB	125									40	60					11.0	
HK 7150WB	150									60	85					11.2	
HK 7200WB	200									80	135					11.5	
HK 7004WB	101.6									40	66.6					13.6	
HK 7005WB	127.0									40	62.0					11.5	
HK 7006WB	152.4									60	87.4					11.0	
HK 7008WB	203.2									80	138.2					11.6	
HK13150WB	150	45.5	52	66	18	38	7	116	15.4	60	96	M10	12	60	75	15.8	15,000
HK13200WB	200									80	140					15.4	
HK13250WB	250									140	190					15.4	
HK13006WB	152.4									60	98.4					15.8	
HK13008WB	203.2									80	143.2					15.4	
HK13010WB	254.0									140	194.0					15.4	
HK20200WB	200	56.6	68	84	25	50	9	155	21	80	130	M10	12	60	80	23.6	24,000
HK20250WB	250									140	180					23.1	
HK20300WB	300									180	230					22.8	
HK20008WB	203.2									80	133.2					23.7	
HK20010WB	254.0									140	184.0					23.1	
HK20012WB	304.8									180	234.8					22.8	

HC Skid Chains for Automobile Manufacturing Line

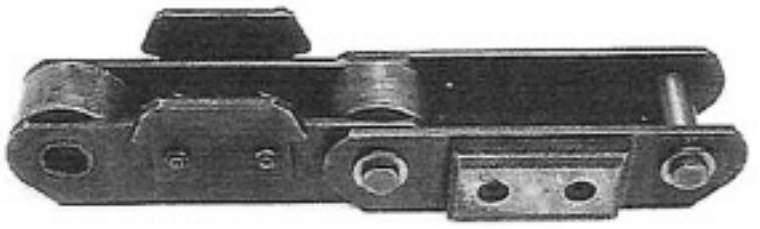

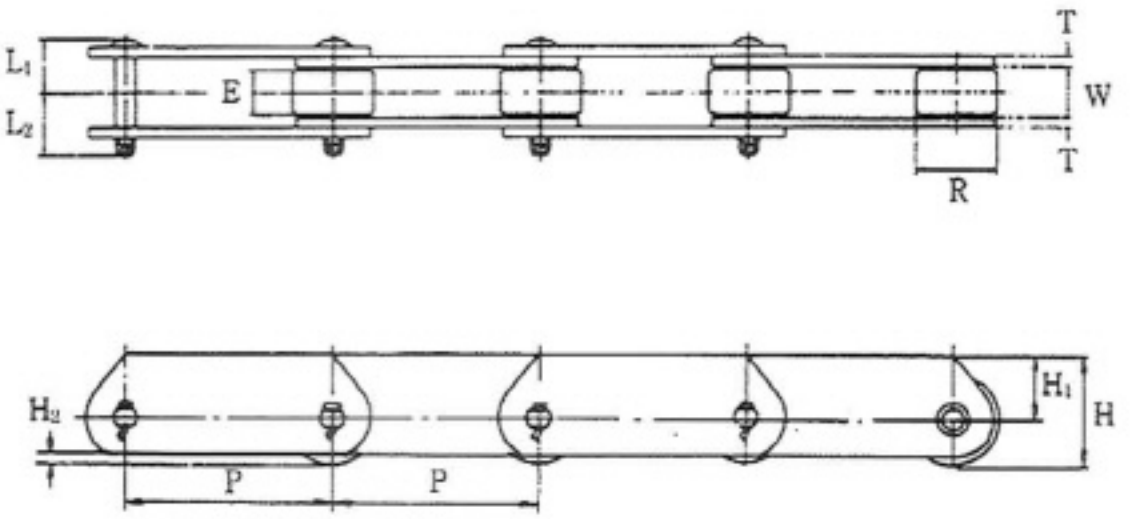

Dimension: mm

HC Chain No.	Pitch P	Roller		Inside Width W	Height of Chain H	Link Plate			Pin		Average Ultimate Strength (kg.f)	Average Weight (kg/m)
		Dia R	Width E			Height		Thickness T	L_1	L_2		
						H_1	H_2					
SKD 03075−R	75	31.8	15.5	16.1	36.9	21	4.9	3.2	18	20	3.2	3.000
SKD 03100−R	100										2.8	
SKD 05100−R	100	40	19	22	44	24	4	4.5	25	28.5	5.9	7.000
SKD 05150−R	150										4.9	
SKD 08150−R	150	44.5	23	27	50.3	28	8	6.3	31	34.5	7.0	8.000
SKD 10150−R	150	50.8	27	30	57.4	32	6.4	6.3	33	36	9.7	11.500
SKD 10200−R	200										8.5	
SKD 6205−R	152.4	57.2	32	37.1	63.5	35	6	7.9	40.5	43	14.0	19.000
SKD 12200−R	200	65	32	37.1	73.5	41	10	7.9	40.5	43	14.9	19.000
SKD 12250−R	250										13.5	
SKD 17250−R	250	80	44	51.4	90	50	13.8	9.5	51.5	58	22.5	25.000
SKD 17300−R	300										21.5	
SKD 20160−R	160	60		38		35	5	6.0	42	42	12.9	20.000
SKD 26300−R	300	85	50	57.2	95.5	53	10.5	9.5	55.5	61	24.3	32.000
SKD 36300−R	300	100	56	66.7	112	62	12	12.7	68	78	39.0	48.500
SKD 36400−R	400										34.2	
SKD 52450−R	450	110	56	77	125	70	17	16	82	90	46.0	51.000

HC Sewage Treatment Chains

■Sewage Treatment Plant Drive Chains

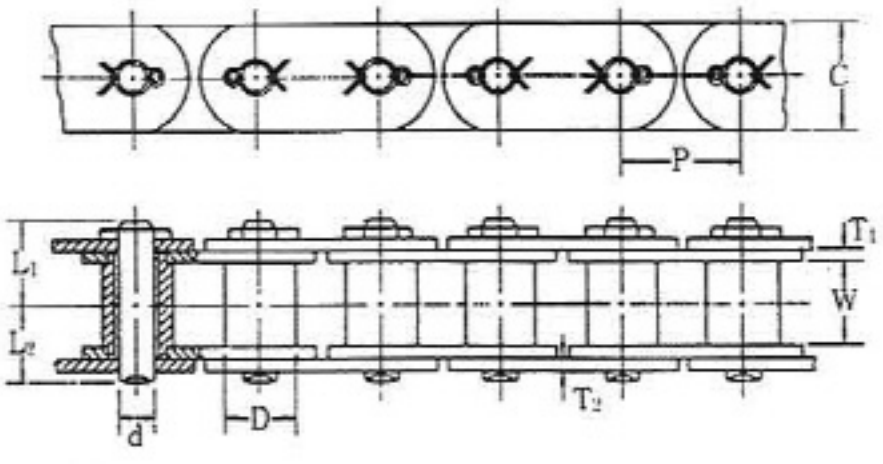

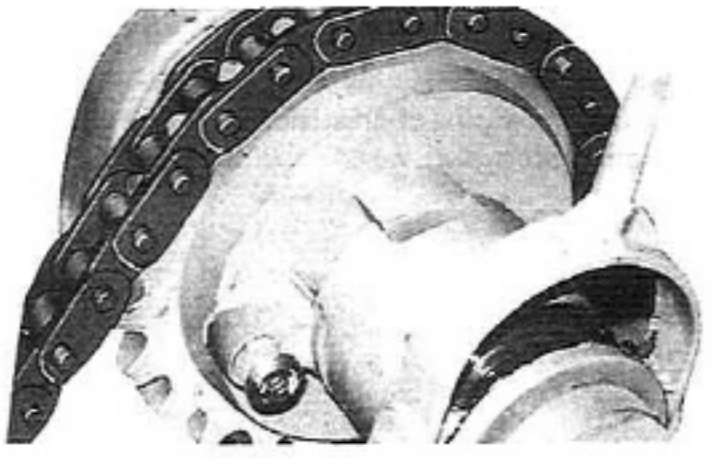

Dimension

Dimension:mm

HC Chain No.	Pitch P	Bush Dia D	Inside Width W	Height C	Link Plate Thickness		Pin Dia	Pin Length		Average Ultimate Strength (kg.f)	Average Weight (kg/m)
					T_1	T_2	d	L_1	L_2		
120 BES4	38.10	22.23	25.4	33	4	4	11.11	26.9	23.8	10.500	6.3
140 BES4	44.45	25.40	25.4	37	5	5	12.70	30.7	26.1	15.000	8.4
160 BES4	50.80	28.58	31.8	43	7	6	14.29	37.3	32.8	24.000	12.6
200 BES4	63.50	39.68	38.1	54	8	8	19.84	45.3	40.0	36.000	18.5
240 BES4	76.20	47.63	47.6	63.5	10	10	23.80	56.8	49.8	42.000	27.5

■Sewage Treatment Water Screen Chains

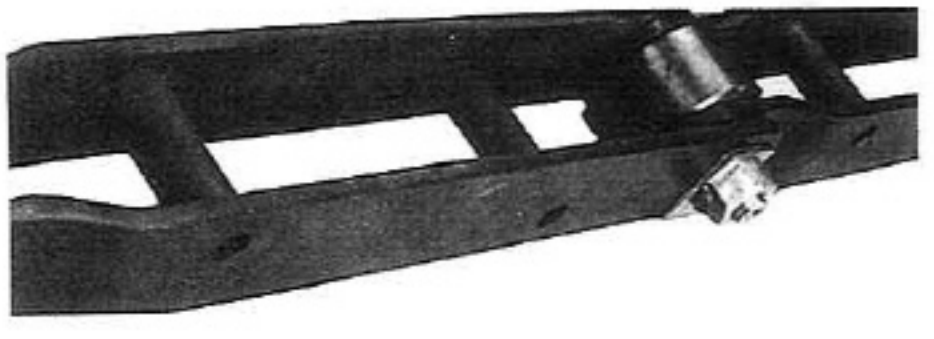

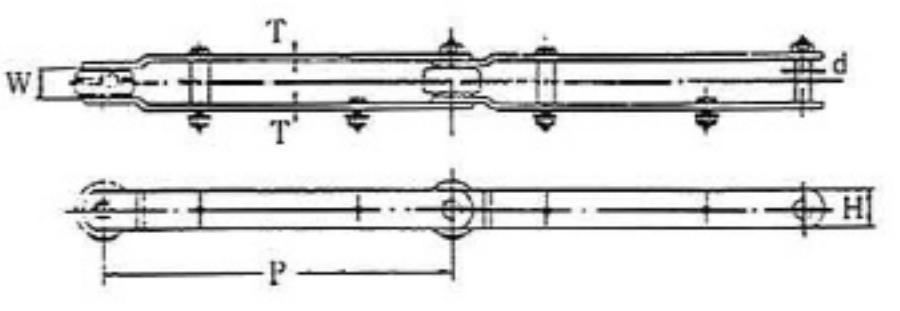

Dimension:mm

HC Chain No.	Average Ultimate Strength(kg)	Pitch P	Roller Dia D	Inside Width W	Pin Dia d	Link Plate Height H	Link Plate Thickness T	Average Weight (kg/m)
HRT4525	25.000	450	90	40.3	20	65	9	16.0
HRT6030	30.000	600	100	40.3	30	75	9	17.0
HRT6040	40.000	600	100	55.2	32	80	12	24.0
HRT6058	58.000	600	100	52.6	34	80	16	30.0
HRT6068	68.000	600	115	64.6	36	90	16	38.0
HRT6078	78.000	600	125	85.0	40	100	19	54.0

HC Sewage Treatment Grit Collector Chains

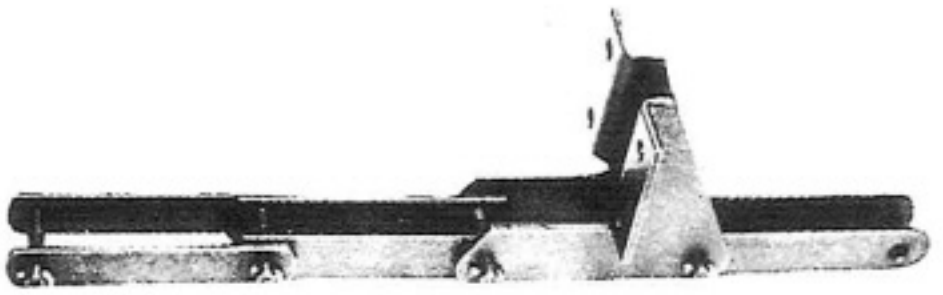

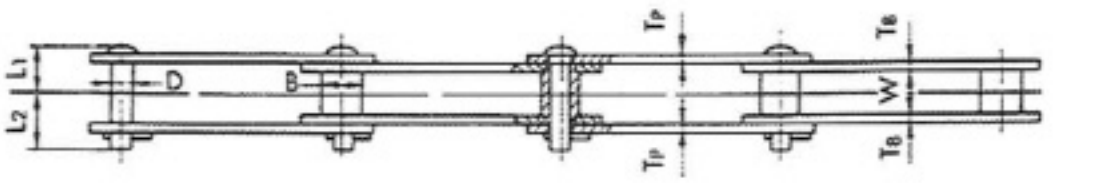

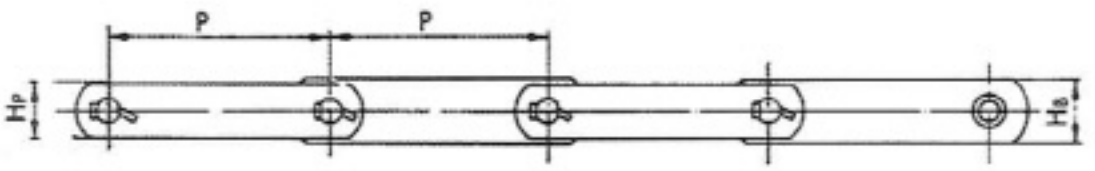

Dimension:mm

HC Chain No.	Average Ultimate Strength (kg.f)	Proof Breaking Strength (kg.f)	Pitch P	Bush Dia B	Inside Width W	Pin			Pinlink Plate		Bushlink Plate		Average Weight (kg.f/m)
						Dia D	L_1	L_2	Thickness T_P	Height T_P	Thickness T_B	Height H_B	
HCS13078W	13.500	12.500	78.11	23	26	12.7	28	32	5	33	5	36	5.2
HCS13103W			103.2										4.6
HCS13152W			152.4										3.6
HCS15152W	15.000	14.000	152.4	24	26	13.5	29	33	5	36	6	38	4.8
HCS19152W	19.000	17.500	152.4	26	30	14.5	32	39.5	6	38	6	44	5.8
HCS25152W	25.000	23.000	152.4	29	30	15.8	35	41	6	44	7	54	7.9
HCS35152W	35.000	32.000	152.4	35	38	19.0	41	46	7	54	7	60	10.9

■SF-4 Attachment

Dimension:mm

HC Chain No.	Dimensions									Additional Weight/Set (kg.f/m)
	2C	2X	J	S	S_1	S_2	S_3	O	T	
HCS13078W	90	131.5	38	110	35	55	28	14	5	0.6
HCS13103W			52							0.7
HCS13152W			76							1.0
HCS15152W	100	143.5	76	155	65	70	35	14	5	1.2
HCS19152W	100	141.5	76	157	65	70	38	14	6	1.4
HCS25152W	100	143.5	76	154	65	70	38	14	6	1.4
HCS35152W	110	152.0	76	160	65	75	40	14	7	1.6

■LA-1 Attachment

Dimension:mm

HC Chain No.	Dimensions									Additional Weight/Set (kg.f/m)
	d_0	L_1	L_2	C	X	N	O	T_A	T_L	
HCS13078W	M10	29.5	41.5	55	77	40	19	16	12	0.4
HCS13103W						56				0.6
HCS15152W	M12	30.5	44.5	55	77	68	19	16	12	0.8
HCS19152W	M12	33.5	51.5	65	90	80	24	20	16	1.2
HCS25152W	M14	36.5	53.5	65	90	80	24	20	16	1.4
HCS35152W	M16	42.5	61.5	75	102	80	26	24	19	2.0

■Long-Pin Attachment

Dimension:mm

HC Chain No.	Dimensions						Additional Weight/Set (kg.f/m)
	d	d_0	L_1	L_2	O	XT_0	
HCS13078W	12	M10	28	49	24	12	0.06
HCS13103W							0.06
HCS15152W	13	M12	29	51	25	12	0.10
HCS19152W	14	M12	32	59	28	16	0.11
HCS25152W	15.5	M14	35	62	29	16	0.14
HCS35152W	18.5	M16	41	72	36.2	19	0.20

HC Standard Roller Chains(Single Strand)

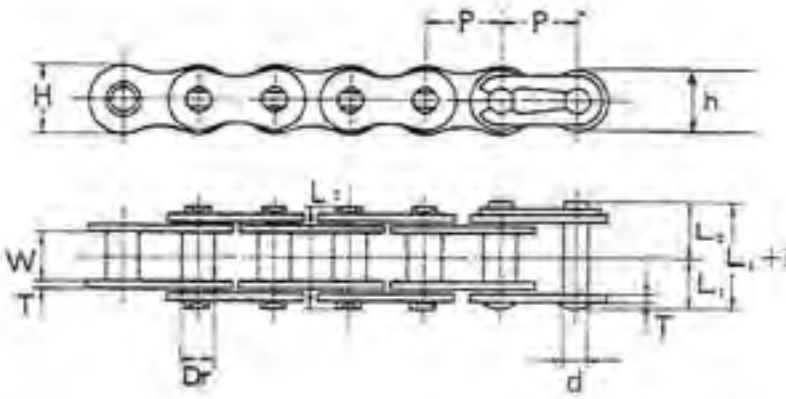

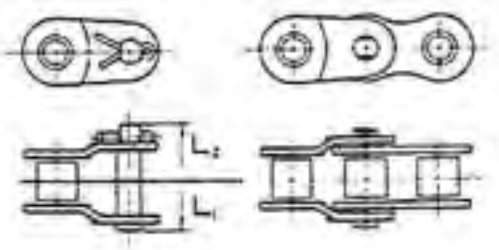

■ Chain Dimensions

Dimension:mm

Chain No.	Pitch P	Inside Width W	Roller Dia Dr	Pin				Link Plate			KS Breaking Strength (kg.f)	Average Ultimate Strength (kg)	Maximum Allowable Load(kg)	Average Weight (kg/m)
				Dia d	Length L_1+L_2	Overall L_1	Dimensions L_2	Thickness T	Height H	Height h				
25	6.35	3.18	3.30	2.31	8.6	3.8	4.8	0.75	5.84	5.05	360	460	65	0.14
35	9.525	4.78	5.09	3.59	12.7	5.85	6.85	1.25	9.0	7.8	800	1,150	220	0.33
40	12.70	7.95	7.94	3.97	17.45	8.25	9.2	1.5	12.0	10.4	1,420	1,920	370	0.64
50	15.875	9.53	10.16	5.09	22.3	10.3	12.0	2.0	15.0	13.0	2,210	3,200	650	1.04
60	19.06	12.70	11.91	5.96	28.1	12.85	15.25	2.4	18.1	15.6	3,200	4,400	900	1.53
80	25.4	15.88	15.88	7.94	35.5	16.25	19.25	3.2	24.1	20.8	5,650	7,500	1,500	2.66
100	31.75	19.05	19.05	9.54	42.6	19.75	22.85	4.0	30.1	26.0	8,850	11,500	2,300	3.99
120	38.10	25.4	22.23	11.11	53.8	24.9	28.9	4.8	36.2	31.2	12,800	15,600	3,100	5.93
140	44.45	25.4	25.4	12.71	58.6	26.9	31.7	5.6	42.2	36.4	17,400	20,500	4,100	7.49
160	50.80	31.75	28.58	14.29	68.7	31.85	36.85	6.4	48.2	41.6	22,700	26,300	5,400	10.10
180	57.15	35.72	35.71	17.46	78.1	35.65	42.45	7.2	54.2	46.8	(28,700)	33,800	6,200	13.45
200	63.50	38.10	39.69	19.85	83.8	39.0	44.8	8.0	60.3	52.0	35,400	43,500	7,300	16.49
240	76.20	47.63	47.63	23.81	103.4	47.9	55.5	9.5	72.4	62.4	51,100	65,000	10,100	24.5

■ Types of Pin Finish

Riveted Pin Type

Cottered Pin Type

HC B-Type Bucket Elevator Chains

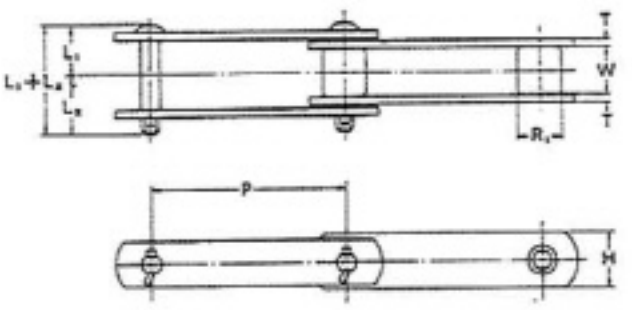

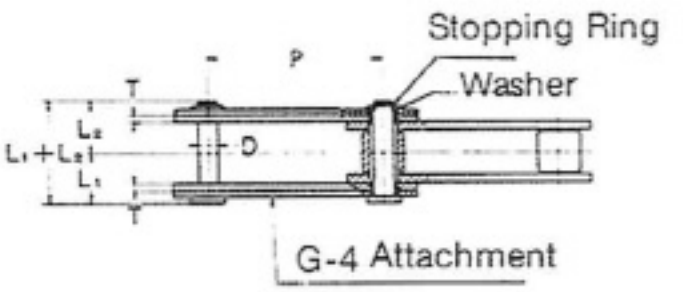

Joint Link

Dimension:mm

HC Chain No.	Pitch P	Roller Dia R	Inside Width W	Link Plate		Pin			Average Weight (kg/m)	Averge Ultimate Strength(kg)			
				H	T	L_1+L_2	L_1	L_2		Spec	BT Spec	R Spec	Y Spec
B 10150−S	150	29	30	38.1	6.3	69	33	36	5.4	11.500	23.000	11.500	21.500
B 12006−S	152.4	34.9	37.1	44.5	7.9	83.5	40.5	43	8.6	19.000	28.500	19.000	28.500
B 12200−S	200								7.8				
B 17200−S	200	40.1	51.4	50.8	9.5	109.5	51.5	58	11.6	25.000	39.500	25.000	39.500
B 17250−S	250								10.7				
B 26200−N	200	50.8	57.2	63.5	9.5	117	56	61	16.2	30.500	57.500	30.500	52.000
B 26250−N	250								14.7				
B 26300−N	300					129.5	68.5		13.9				
B 36250−N	250	57.2	66.7	76.2	12.7	147	69	78	23.7	−	88.500	−	87.000
B 36300−N	300								22.1				
B 36350−N	350					159	81		20.6				
B 60300−N	300	70	77	90	12.7	172	88	84	29.7	−	106.000	−	96.000
B 60350−N	350								27.8				
B 60400−N	400								26.4				
B 90350−N	350	85	88	110	16	197	101.5	95.5	45.9	−	166.000	−	151.000
B 90400−N	400								43.4				
B120400−N	400	100	100	130	19	227.5	119.5	108	63.5	−	225.000	−	206.000

■ Joint Links

Dimension:mm

HC Chain No.	Pitch P	D	L_1	L_2	L_1+L_2	T
(B36250−N)・B36300−N・B36350−N	250・300・350	28	83	81	164	(12.7)22
B60300−N・B60350−N・B60400−N	300・350・400	35	88	88	176	22
B90350−N・B90400−N	340・400	42	102.5	101.5	204	16
B120400−N	400	50	114.5	115.5	230	19

HC B-Type Bucket Elevator Chains

■ Attachment

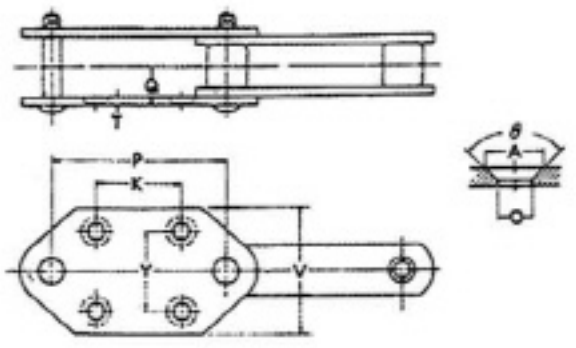

G-4 Attachment

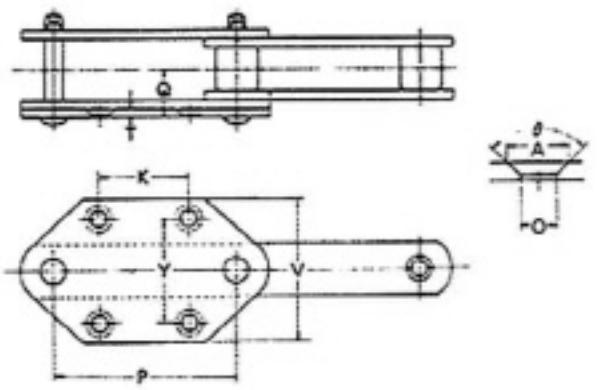

G-4 Attachment
(Combination of Two Plates)

■ G-4 Attachment

Dimension:mm

HC Chain No.	P	V	K	Y	T	Q	A	O	θ	Jointing bolt	Weight of Chain With ATT (every two links)
RF 650-S(M)	152.4	110	75	70	6.3	28.5	20	12	90°	M10	7.2(7.6)
RF 10150-S(M)	150	110	75	70	6.3	28.5	20	12	90°	M10	7.2(7.4)
B 10150-S							26	15		M12	7.0
RF 6205-S(M)	152.4	110	75	70	7.9	35.5	26	15	90°	M12	11.0(11.3)
B 12006-S	152.4	110	75	70	7.9	35.5	26	15	90°	M12	10.5
RF 12220-S(M)	200	110	100	70						M12	10.2(10.5)
B 12200-S	200	120	100	80						M14	9.9
RF 17200-S(M)	200	120	100	80	9.5	45.5	26	15	90°	M12	14.0(14.6)
B 17200-S	200	120	100	80			26	15		M14	13.9
RF 17250-S(M)	250	150	140	100			26	15		M12	14.5(15.0)
B 17250-S	250	150	140	100			32	19		M16	14.0
RF 26200-S(M)	200	120	100	80	9.5	48	26	15	90°	M12	17.5(18.5)
B 26200-N	200	120	100	80			26	15		M14	18.3
RF 26250-S(M)	250	150	140	100			26	15		M12	17.6(18.4)
B 26250-N	250	150	140	100			32	19		M16	17.8
RF 26300-S(M)	300	150	180	100			26	15		M12	16.7(17.4)
RF 36250-S(M)	250	150	140	100	12.7	60	32	19	90°	M16	27.6(28.6)
B 36250-N	250		140								27.5
RF 36300-S(M)	300		180								26.2(27.1)

■ G-4 Attachments(Combination of Two Plates)

Dimension:mm

HC Chain No.	P	V	K	Y	T	Q	A	O	θ	Jointing bolt	Weight of Chain With ATT (every two links)
B 26300-N	300	200	170	140	12	60	38	24	90°	M20	22.5
B 36300-N	300	200	170	140	12	72	38	24	90°	M20	31.4
B 36350-N	350	240	200	170	12	72	40	28	60°	M24	31.2
B 60300-N	300	200	170	140	12	77	38	24	90°	M20	39.5
B 60350-N	350	240	200	170	12	77	40	28	60°	M24	38.8
B 60400-N	400	280	230	200	16	81	50	35	60°	M30	42.8
B 90350-N	350	240	200	170	12	89.5	40	28	60°	M24	57.8
B 90400-N	400	280	230	200	16	93.5	50	35	60°	M30	60.8
B120400-N	400	280	230	200	16	105.5	50	35	60°	M30	82.2

HC RF-Type Flow Chains

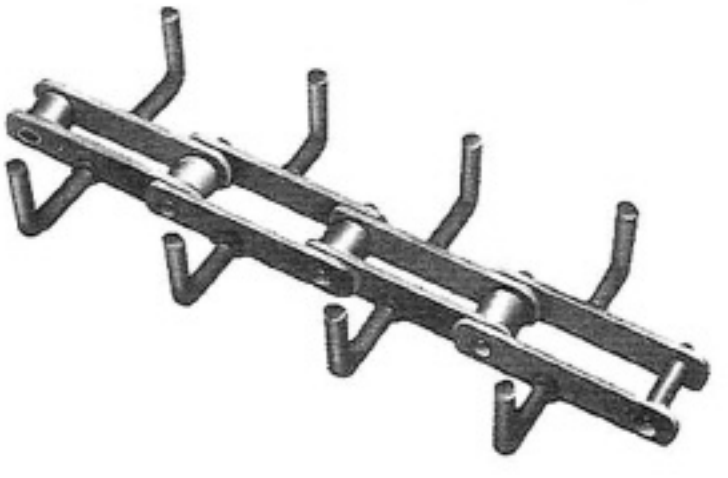

1. Horizontal Flow Conveyor Chains (HC Flow FC Type)

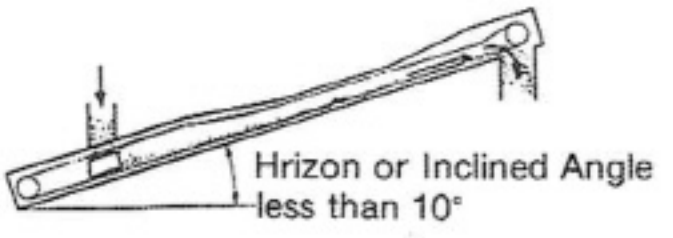

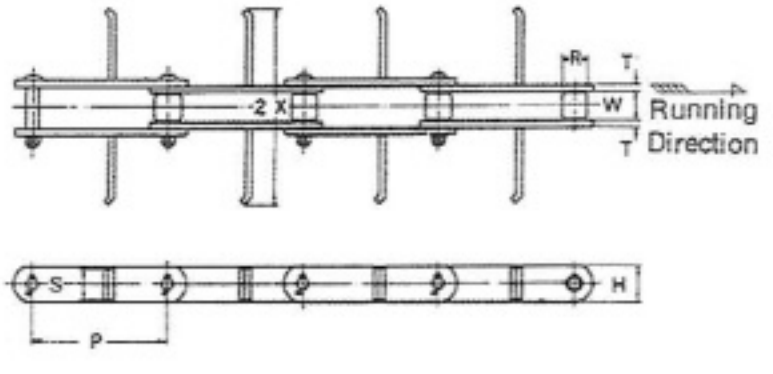

L Attachment

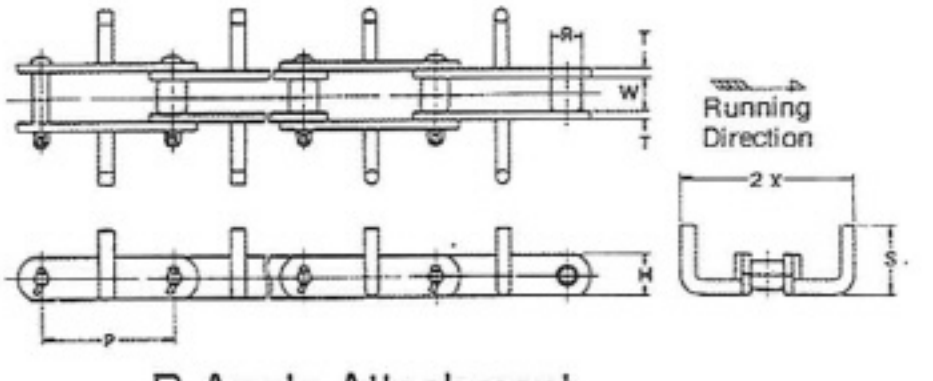

B Angle Attachment,
B Annulus Attachment

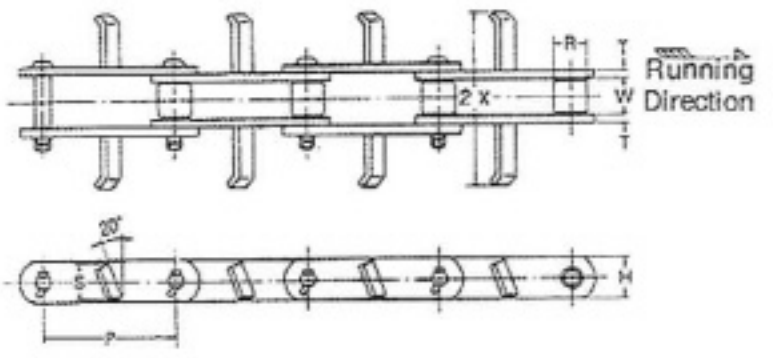

KL Attachment

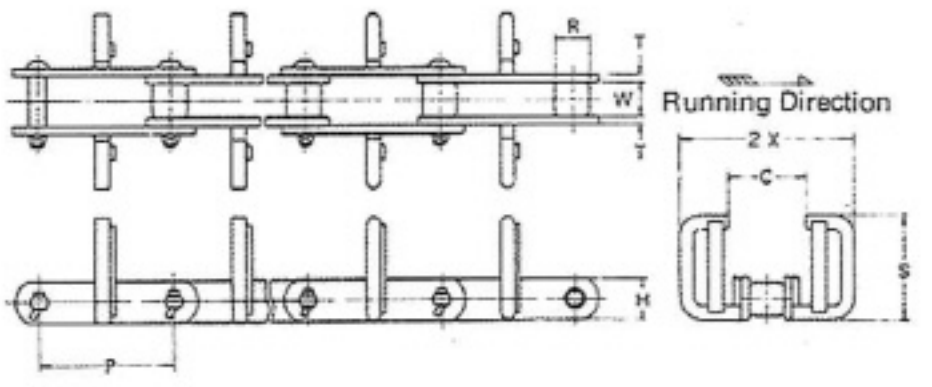

U²V Angle Attachment,
U₂V Annulus Attachment

HC RF-Type Flow Chains

■ Dimensions

Dimension:mm

HC Chain No.	Former Chain Type No.	Used Flow Type No.	Pitch P	Roller Dia R	Inside Width W	Link Plate Height H	Link Plate Thickness T	Wing Height 2X	L Attachment S	L Attachment Weight (kg/m)	KL Attachment S	KL Attachment Weigh (kg/m)	B Attachment S	B Attachment Weight (kg/m)	U_2V Attachment S	U_2V Attachment C	U_2V Attachment Weight (kg/m)	Average Ultimate Strength(kg) Heavy Series	Average Ultimate Strength(kg) Heavy Series
RF 450W-M	F4 FW4	FC150	101.6	25.4	27	31.8	6.3	135	28	6.5	28	6.5	55	7.4	80	60	9.1	11.000	14.500
RF08125W-M		FC200	125	25.4	27	31.8	6.3	185	28	6.5	28	6.5	80	8.2	115	85	10.1	11.000	14.500
RF 10125-M		FC200	125	31.8	30	31.8	6.3	185	34	8.1	34	8.1	80	8.9	115	85	10.9	11.500	23.000
RF 10150-M		FC270	150					250					100	9.8	140	105	12		
RF 6205M	F6 FA6	FC270	152.4	38.1	37.1	44.5	7.9	250	40	12	40	12	100	14.4	140	105	18.5	19.000	28.500
RF 12200-M		FC350	200	38.1	37.1	44.5	7.9	330	40	12	40	12	125	16.3	185	130	20	19.000	28.500
RF 17200-M		FC350	200	44.5	51.4	50.8	9.5	330	46	17	46	17	125	18.7	185	130	23	25.000	39.500
RF 17250-M		FC450	250					430					160	19.3	230	135	23.7		
RF 26200-M	F8 GA8	FC410	200	50.8	57.2	63.5	9.5	390	58	28	58	28	150	25	233	100	33.4	32.000	53.000
RF 26250-M		FC450	250					430		23		23	160	25	230	135	29	30.500	55.500
RF 26300-M		FA580	300					560		23		23	200	27	290	160	30.6	30.500	69.500
RF 36300-M	F12	FC580	300	57.2	66.7	76.2	12.7	560	70	34	70	34	200	37	290	160	40	48.500	69.500
RF 36300-N	FA12																	-	88.500

Types of Attachments	Application
L	For Conveying Grain Like Wheat or Cement
KL	For Conveying High Adhesive Powdered Material
B Annulus	For Conveying Powdered Material Like Flour and Cement at Higher Coveying Efficiency Than L Attachment
B Angle	For Conveying Granular Material Difficult to Convey With B Annulus or Adhesive Powdered Material
U_2V Annulus	For Larger Conveyor Than With L, KL, B or For an Upgrade
U_2V Angle	For Conveying Granular Material Difficult to Convey With U_2V Annulus or Adhesive Powdered Material
W	For Conveying Powdered Material

HC RF-Type Flow Chains

3. Flow Conveyor Chains For Grain Only(HC Flow FK Type)

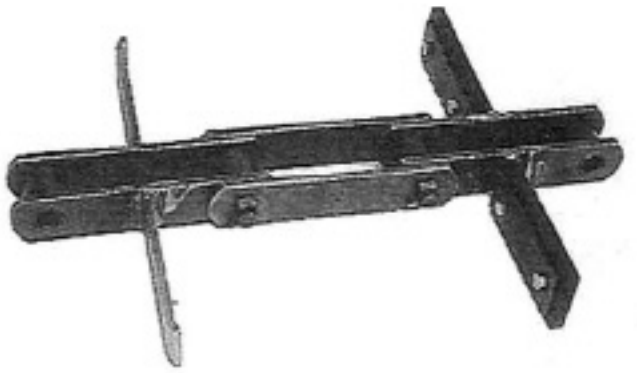

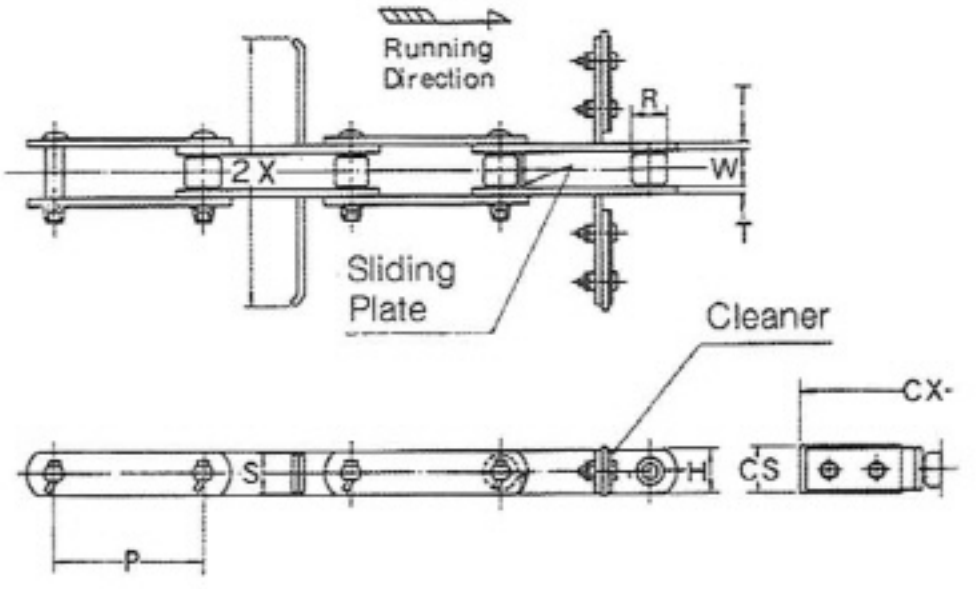

■Dimensions

Dimension:mm

HC Chain No.	Used Flow Type No.	Pitch P	Roller Dia R	Inside Width W	Link Plate		Attachment		Cleaner		Average Weight (kg/m)	Average Ultimate Strength (kg)
					Height H	Thickness T	Wing Height 2X	S	CX	CS		
RF 03075-S	FK110	75	15.9	16.1	22	3.2	95	20	105	28	2.1	3,000
RF 430-S	FK150	101.5	20.1	22.6	25.4	4.8	135	22	145	32	3.4	5,500
RF 450-S	FK150	101.6	22.2	27	28.6	6.3	135	25	145	34	5.0	8,000
RF 08125-S	FK200	125	22.2	27	28.6	6.3.	185	25	195	34	5.0	8,000
RF 10125-S	FK200 FK240	125	29	30	38.1	6.3	185 225	34	195 235	47	6.8 7.3	11,500
RF 10150-S	FK270 FK320	150	29	30	38.1	6.3	250 300	34	265 315	47	6.9 7.2	11,500
RF 6205-S	FK270	152.4	34.9	37.1	44.5	7.9	250	40	265	53	10.5	19,000
RF 12200-S	FK350	200	34.9	37.1	44.5	7.9	330	40	345	53	10.3	19,000
RF 17200-S	FK350 FK450	200	40.1	51.4	50.8	9.5	330 430	46	345 445	58	14.0 16.0	25,000
RF 26200-S	FK450	200	44.5	57.2	63.5	9.5	430	58	445	68	21.0	32,000

HC 81X Conveyor Chains

Dimension:mm

HC Chain No.	Pitch P	Inside Width W	Roller Dia Dr	Pin			Link Plate		Breaking Strength (kg.f)
				d	L_1	L_2	T	H	
HC81X	66.2	26.9	23.1	11.1	29.3	28.7	4.0	28.6	7,500
HC81XH	66.2	26.9	23.1	11.1	32.9	32.9	8.0	28.6	14,000
HC81X-8"	203.2	26.9	23.1	11.1	24.3	28.7	4.0	28.6	7,500

HC RF-Type Flow Chains

3. Flow Conveyor Chains For Grain Only(HC Flow FK Type)

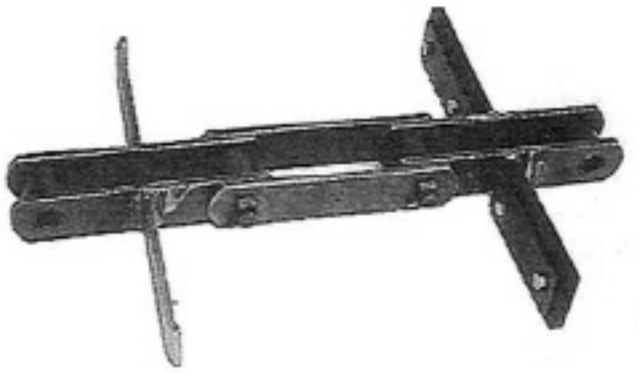

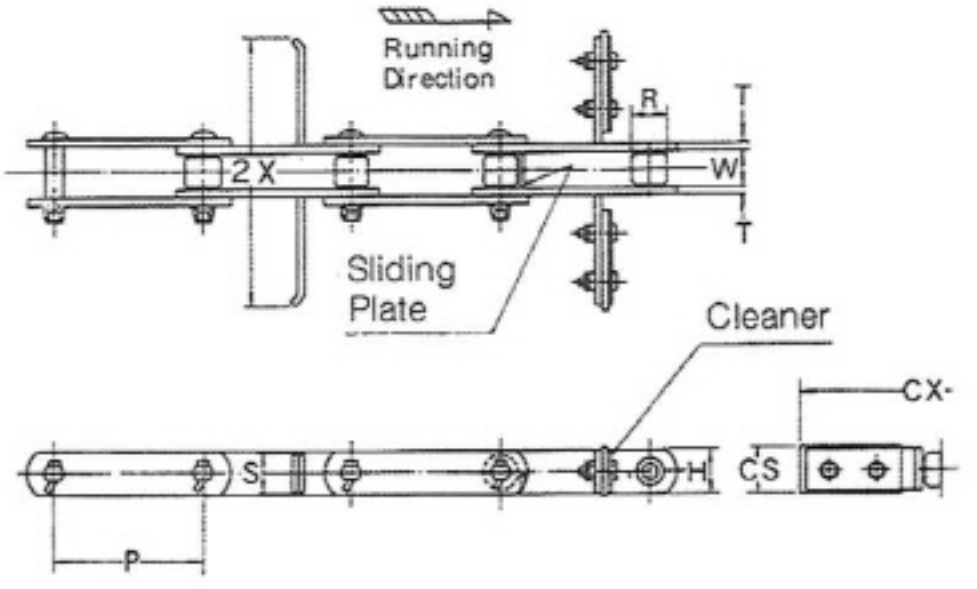

■Dimensions

Dimension:mm

HC Chain No.	Used Flow Type No.	Pitch P	Roller Dia R	Inside Width W	Link Plate		Attachment		Cleaner		Average Weight (kg/m)	Average Ultimate Strength (kg)
					Height H	Thickness T	Wing Height 2X	S	CX	CS		
RF 03075-S	FK110	75	15.9	16.1	22	3.2	95	20	105	28	2.1	3,000
RF 430-S	FK150	101.5	20.1	22.6	25.4	4.8	135	22	145	32	3.4	5,500
RF 450-S	FK150	101.6	22.2	27	28.6	6.3	135	25	145	34	5.0	8,000
RF 08125-S	FK200	125	22.2	27	28.6	6.3.	185	25	195	34	5.0	8,000
RF 10125-S	FK200 FK240	125	29	30	38.1	6.3	185 225	34	195 235	47	6.8 7.3	11,500
RF 10150-S	FK270 FK320	150	29	30	38.1	6.3	250 300	34	265 315	47	6.9 7.2	11,500
RF 6205-S	FK270	152.4	34.9	37.1	44.5	7.9	250	40	265	53	10.5	19,000
RF 12200-S	FK350	200	34.9	37.1	44.5	7.9	330	40	345	53	10.3	19,000
RF 17200-S	FK350 FK450	200	40.1	51.4	50.8	9.5	330 430	46	345 445	58	14.0 16.0	25,000
RF 26200-S	FK450	200	44.5	57.2	63.5	9.5	430	58	445	68	21.0	32,000

HC 81X Conveyor Chains

Dimension:mm

HC Chain No.	Pitch P	Inside Width W	Roller Dia Dr	Pin			Link Plate		Breaking Strength (kg.f)
				d	L_1	L_2	T	H	
HC81X	66.2	26.9	23.1	11.1	29.3	28.7	4.0	28.6	7,500
HC81XH	66.2	26.9	23.1	11.1	32.9	32.9	8.0	28.6	14,000
HC81X-8"	203.2	26.9	23.1	11.1	24.3	28.7	4.0	28.6	7,500

HC RF-Type Side Roller Conveyor Chains

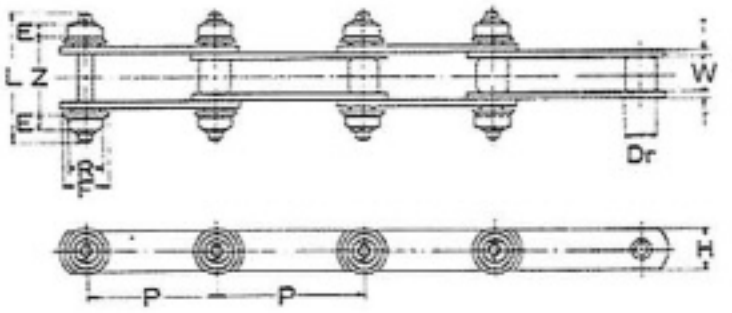

Dimension:mm

HC Chain No.	Pitch P	Roller Dia Dr	Inside Width W	Plate		Side Roller			Pin		Additional Weight of Side Roller(kg/2EA)	Allowable Load on Side Roller(kg)	
				H	T	R	F	E	L	Z		No Heat Treated	Heat Treated
RF 03075-S	75	15.9	16.1	22	3.2	31.8	42	12	76	38	0.3	70	110
RF 03100-S	100												
RF 430-S	101.6	20.1	22.6	25.4	4.8	38.1	50	15	103	56	0.5	100	160
RF 05075-S	75	22.2	22	32	4.5	40	50	14	102	55	0.5	120	200
RF 05100-S	100												
RF 05150-S	150												
RF 450-S	101.6	22.2	27	28.6	6.3	44.5	55	20	130	70.5	0.7	170	240
RF 10100-S	100	29	30	38.1	6.3	50.8	65	20	136	73	1.0	200	330
RF 10150-S	150												
RF 6205-S	152.4	34.9	37.1	44.5	7.9	57.2	70	25	167	90.5	1.3	280	470
RF 12200-S	200	34.9	37.1	44.5	7.9	65	80	24	167	92.5	1.8	280	470
RF 12250-S	250												
RF 17200-S	200	40.1	51.4	50.8	9.5	65	80	24	192	112.5	3.8	320	540
RF 17250-S	250												
RF 17300-S	300												
RF 26200-S	200	44.5	57.2	63.5	9.5	80	100	34	229	124.5	6.9	500	860
RF 26250-S	250												
RF 26300-S	300												
RF 36250-S	250	50.8	66.7	76.2	12.7	100	125	38	268	151	11.7	670	1.130
RF 36300-S	300												
RF 17300-S	300												

HC Top Roller Conveyor Chains

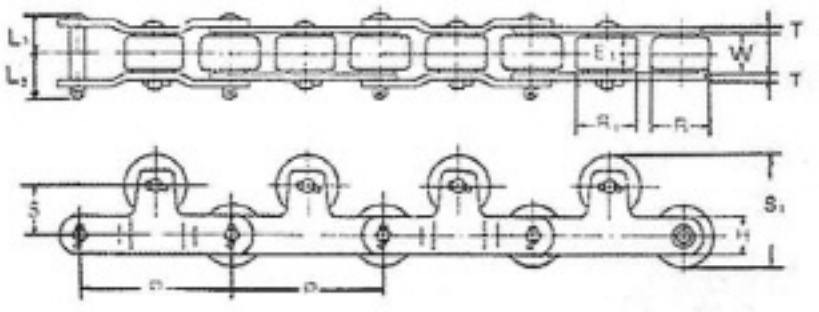

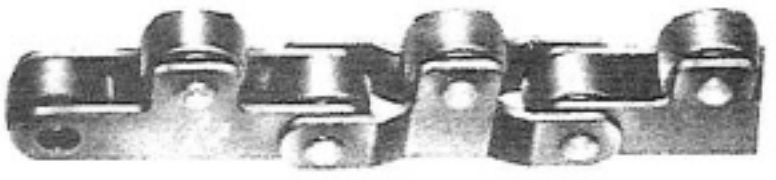

Dimension:mm

HC Chain No.	Pitch P	Roller			Plate		Pin		Top Roller				Type	Average Weight (kg./m)	Additional Weight of Side Roller (kg/1EA)	Allowable Top Roller Load.	
		Dr	E	W	H	T	L_1	L_2	S_1	S_2	R	E_1				In Case of No Heat Treat	In Case of Heat Treat
RF 03075-R	75	31.8	15.5	16.1	22	3.2	18	20	231	59	40	13	I	2.7	0.18	35	60
RF 03100-R	100													2.3			
RF 05100-R	100	40	19	22	32	4.5	25	28.5	30	70	40	19	I	5.0	0.26	65	105
RF 05150-R	150													4.1			
RF 10150-R	150	50.8	27	30	38.1	6.3	33	36	30	80.8	50.8	27	I	7.9	0.56	115	195
RF 6205-R	152.4	57.2	32	37.1	44.5	7.9	40.5	43	37.8	95	57.2	32	I	12.1	0.91	150	255
RF 12200-R	200	65	32	37.1	44.5	7.9	40.5	43	45	110	65	32	I	11.4	1.15	150	255
RF 17200-R	200	80	44	51.4	50.8	9.5	51.5	58	65	145	80	44	II	18.8	2.58	250	420

HC Escalator Step Chains

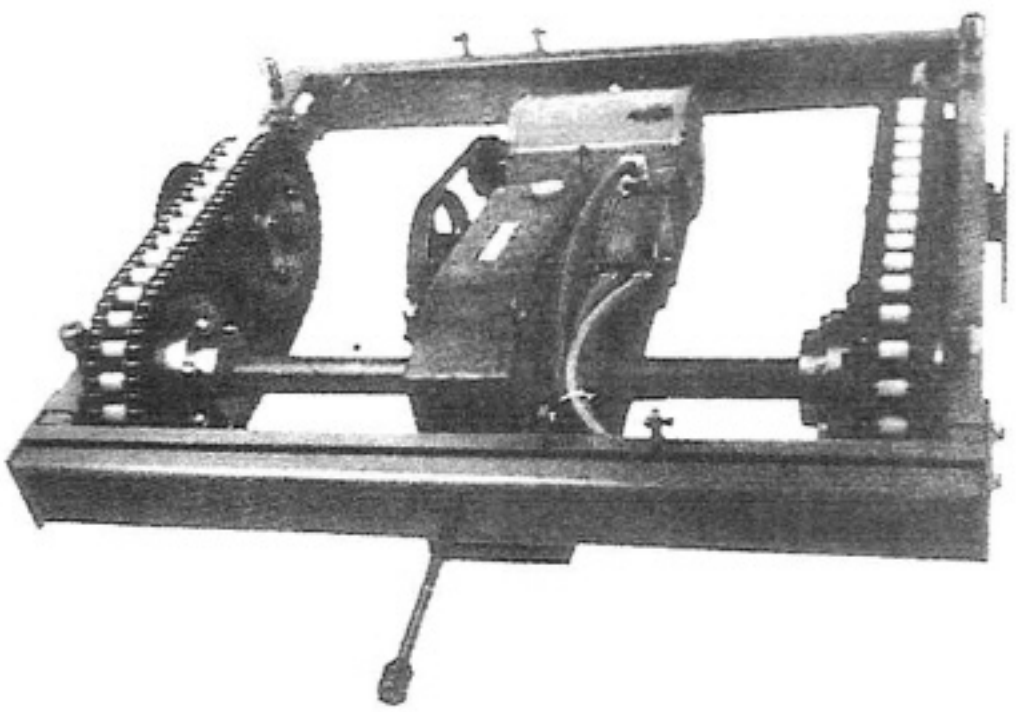

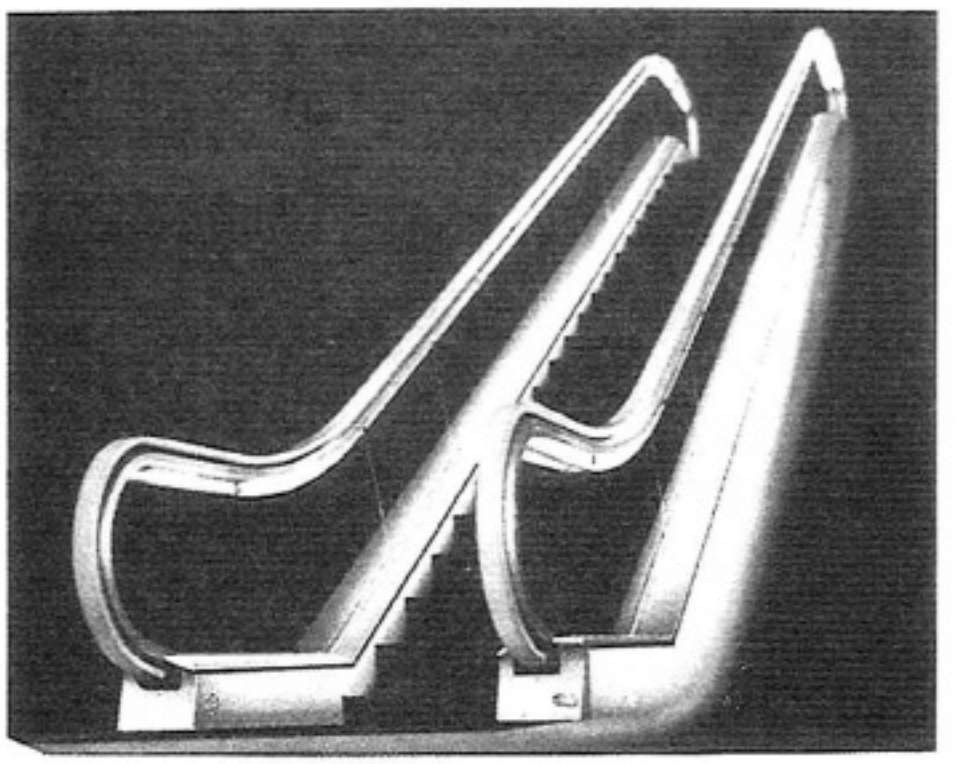

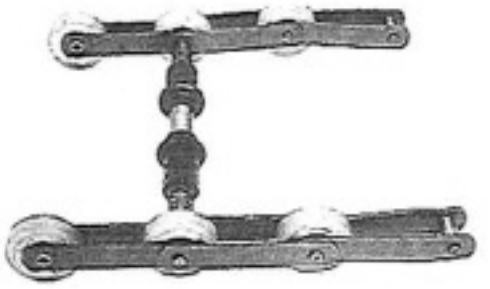

■ Axle-Type Step Chains

Axle-Type Standard Step Chain

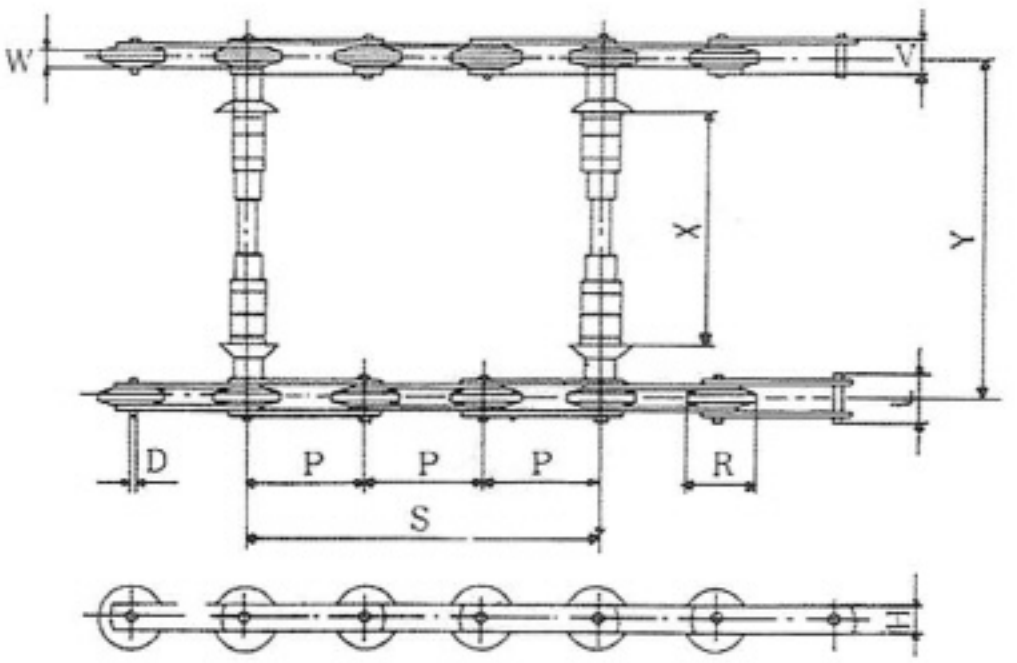

Axle-Type Step Chain for Subway and Outdoor Escalator

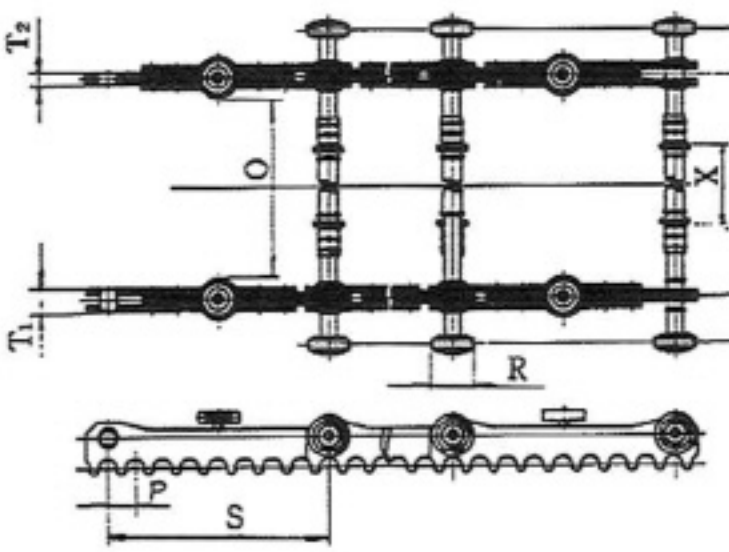

Dimension: mm

HC Chain No.	Pitch P	Roller Dia R	Pin Dia D	Inside Width W	Pin Length L	Distance of Axles S	H	X	Y	Z	T_1	T_2	O	Minimum Strength (kg.f)
HC32ESC	135.467	76.5	11.10	22.50	51.0	406.4	32	471	656.5				—	12.300
HC40ESC	135.467	76.5	11.10	22.50	51.0	406.4	32	690	875.5				—	12.300
HC48ESC	135.467	76.5	11.10	22.50	51.0	406.4	32	891	1076.5				—	12.300
HC32BESC	50.8	76.5	—	—	—	406.4	—	380.5	747	923	16	33	670	
HC48BESC	50.8	76.5	—	—	—	406.4	—	800.5	1167	1343	16	33	1090	
HIGH RISE	135.467	76.5	12.0	22.50	51.0	406.4	32	800.5	1076.5					15.200
PALLET	135.467	76.5	12.0	22.50	51.0	406.4	32/38	856.3	1063.6					15.000

HC Escalator Step Chains

■ Moduler Chain

Dimension: mm

HC Chain No.	Moduler Pitch P	Moduler Dia R_1	Inside Width L	Width of Stair Way Y	Outside Width Z	Minimum Strength (kg.f)
80-2M.D.L	50.8	28.6	43.54	72.64	110.3	11.700

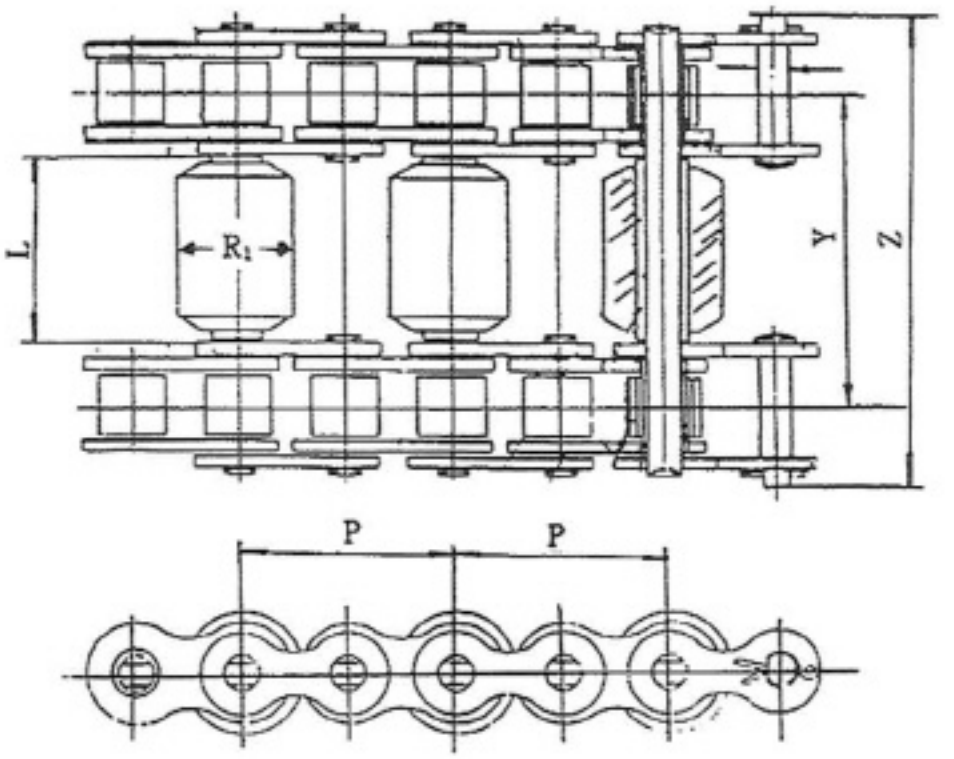

■ Roller Chain-Type Step Chains

5E-Type

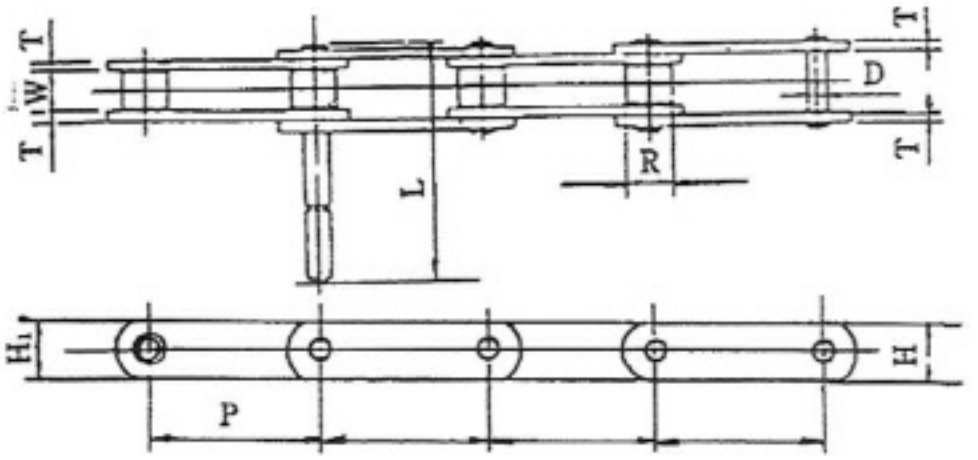

38N, 38NH-Type

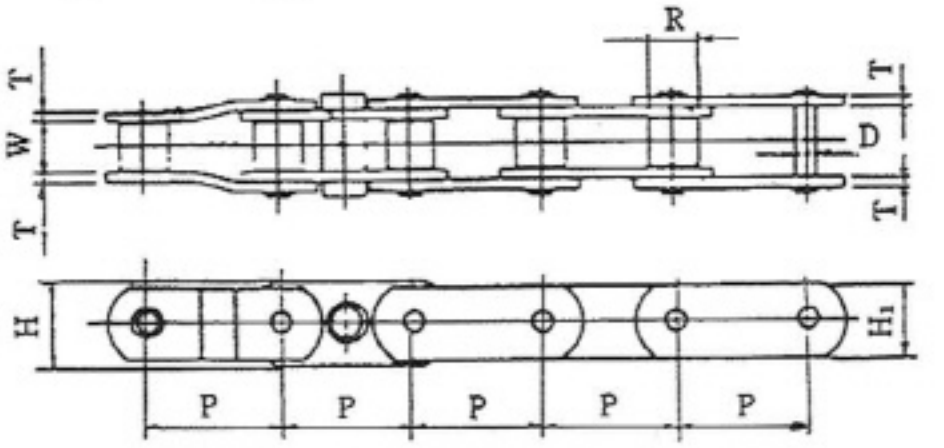

GO1-Type

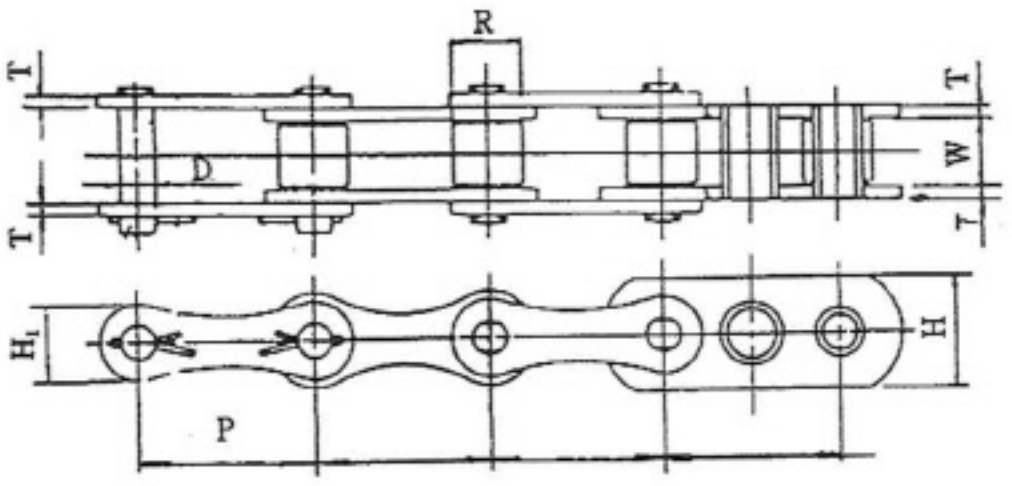

GO2-Type

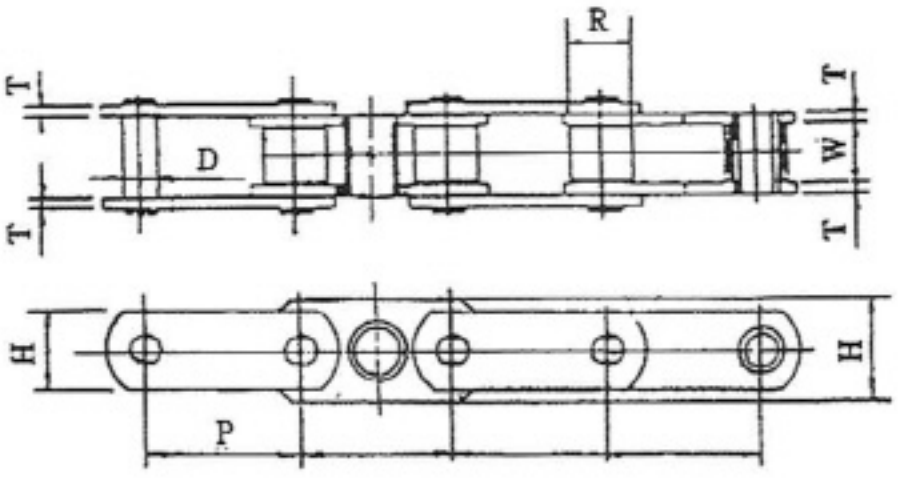

Dimension: mm

HC Chain No.	Pitch P	Inside Width W	Roller Dia R	Pin Dia D	Hole Dia F	D-1 Att D_2	D-1 Att ℓ	Bearing Area (cm^2)	Breaking Load (kg.f)	Average Weight (kg/m)
HC GO1	68.4	25.4	28.0	14.29	21.0	—	—	5.02	9.000	5.17
HC GO2	67.6	25.4	28.0	14.29	21.0	—	—	5.02	9.000	5.17
HC 38N	81.28	31.4	31.75	12.70	21.0	—	—	5.69	12.700	9.01
HC 38NH	81.28	31.4	31.75	14.29	21.0	—	—	6.44	20.400	9.01
HC 5E	101.244	25.0	28.0	14.29	—	14.94	—	93.6	18.600	5.94

HC Tower Parking Chains

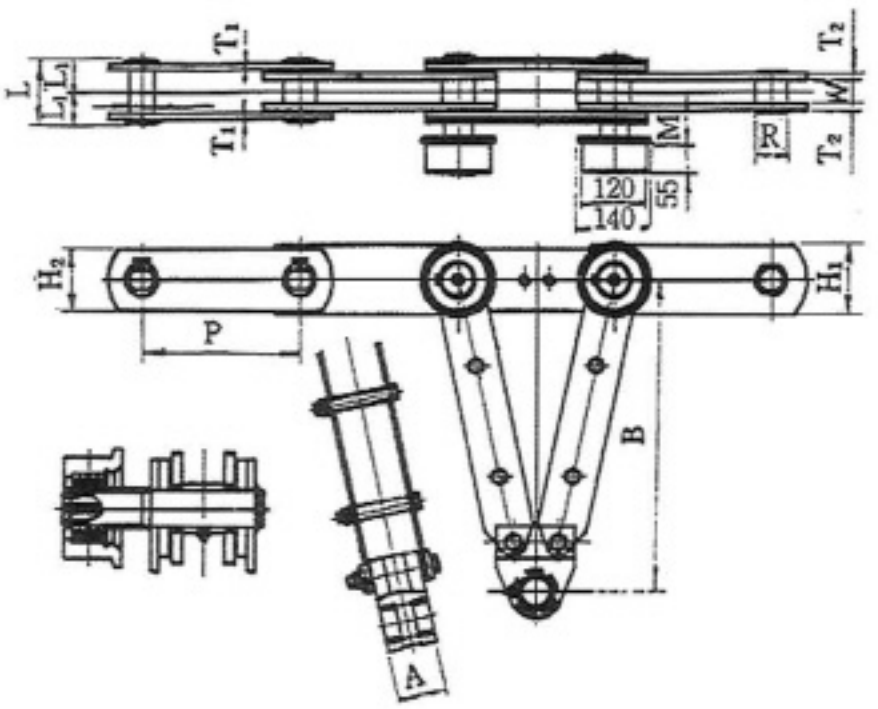

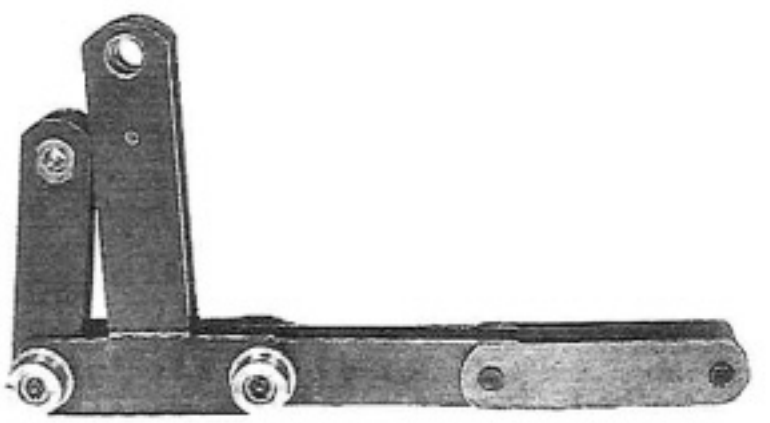

S TYPE

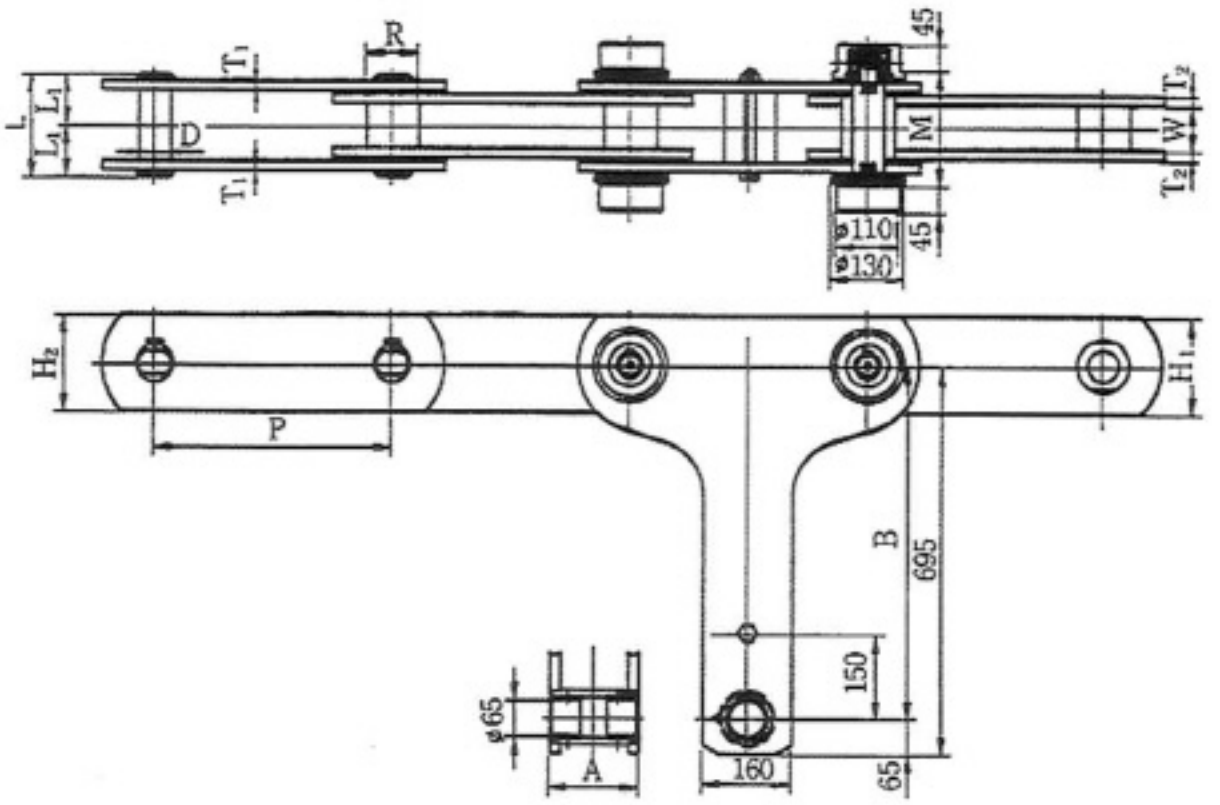

C TYPE

Dimension:mm

Types	HC Chain No.	Parking Capacity	P	H_1	H_2	T_1	T_2	L	L_1	D	R	M	W	A	B	Average Weight (kg/step)	Minimum Breaking Load (t)
S Type	HC24S	Less 24 Cars	420	130	115	12.7	12.7	118	59	42	58	105	40	98	601	96	125
	HC32S	30~40	437.5	115	100	12.7	12.7	133	66.5	42	58	105	60	98	634.8		155
C-Type	HC24C	15~24	440	140	140	12	12	117	58.5	40	70	131	50	101	630	110	100
	HC32C	25~32	440	160	160	16	14	139	69.5	45	83	153	60	123	630	146	150
	HC42C	33~42	440	175	175	19	16	169	84.5	60	90	183	80	153	630	185	230
	HC42CL	33~42	455	175	175	19	16	169	84.5	60	90	183	80	153	630	180	230

HC Standard Roller Chains (Double Strand, Triple Strand)

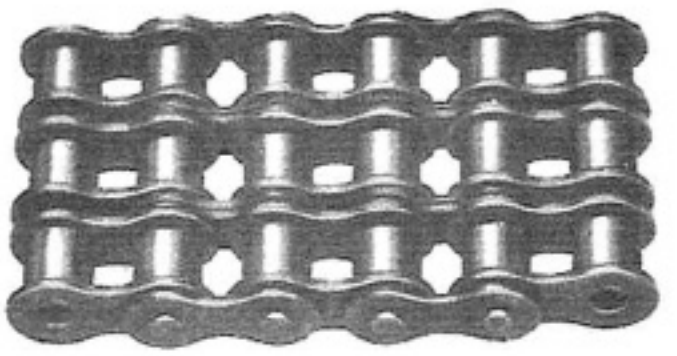

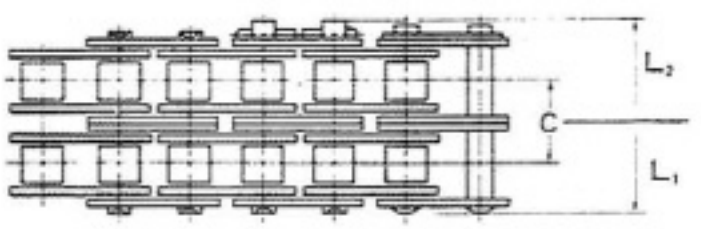

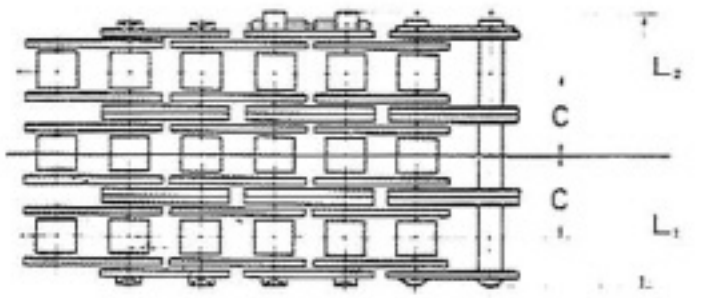

■ Chain Dimensions

Dimension:mm

HC Chain No.	Pitch P	Inside Width	Roller Dia Dr	Pin				Link Plate			Traverse Pitch C	Average Ultimate Strength (kg)	Max Allowable Load (kg)	Average Weight (kg/m)
				Dia d	Length L_1+L_2	Overall Dimensions		Thickness T	Height H	Height h				
						L_1	L_2							
25−2	6.35	3.18	3.30	2.31	15.0	7.0	8.0	0.75	5.84	5.05	6.4	920	110	0.27
35−2	9.525	4.78	5.09	3.59	22.8	10.9	11.9	1.25	9.0	7.8	10.1	2,300	370	0.69
40−2	12.70	7.95	7.94	3.97	32.6	15.45	17.15	1.5	12.0	10.4	14.4	3,840	630	1.27
50−2	15.875	9.53	10.16	5.09	40.5	19.35	21.15	2.0	15.0	13.0	18.1	6,400	1,100	2.07
60−2	19.05	12.70	11.91	5.96	51.0	24.25	26.75	2.4	18.1	15.6	22.8	8,800	1,530	3.04
80−2	25.40	15.88	15.88	7.94	64.8	30.9	33.9	3.2	24.1	20.8	29.3	15,000	2,550	5.27
100−2	31.75	19.05	19.05	9.54	78.5	37.7	40.8	4.0	30.1	26.0	35.8	23,000	3,910	7.85
120−2	38.10	25.4	22.23	11.11	99.2	47.6	51.6	4.8	36.2	31.2	45.4	31,200	5,270	11.70
140−2	44.45	25.4	25.4	12.71	107.5	51.35	56.15	5.6	42.2	36.4	48.9	41,000	6,970	14.83
160−2	50.80	31.75	28.58	14.29	127.3	61.15	66.15	6.4	48.2	41.6	58.5	52,600	9,180	20.04
180−2	57.15	35.72	35.71	17.46	144.1	68.75	75.35	7.2	54.2	46.8	65.8	67,600	10,540	26.52
200−2	63.50	38.10	39.69	19.85	155.5	74.85	80.65	8.0	60.3	52.0	71.6	87,000	12,410	32.63
240−2	76.20	47.63	47.63	23.81	191.3	91.9	99.4	9.5	72.4	62.4	87.8	130,000	17,170	48.1
25−3	6.35	3.18	3.30	2.31	21.4	10.2	11.2	0.75	5.84	5.05	6.4	1,380	170	0.40
35−3	9.525	4.78	5.09	3.59	32.9	16.0	16.9	1.25	9.0	7.8	10.1	3,450	550	1.05
40−3	12.70	7.95	7.94	3.97	46.8	22.65	24.15	1.5	12.0	10.4	14.4	5,760	930	1.90
50−3	15.875	9.53	10.16	5.09	58.6	28.4	30.2	2.0	15.0	13.0	18.1	9,600	1,630	3.09
60−3	19.05	12.70	11.91	5.96	73.8	35.65	38.15	2.4	18.1	15.6	22.8	13,200	2,250	4.54
80−3	25.4	15.88	15.88	7.94	94.1	45.6	48.5	3.2	24.1	20.8	29.3	22,500	3,750	7.89
100−3	31.75	19.05	19.05	9.54	114.4	55.65	58.75	4.0	30.1	26.0	35.8	34,500	5,750	11.77
120−3	38.10	25.4	22.23	11.11	144.8	70.4	74.4	4.8	36.2	31.2	45.4	46,800	7,750	17.53
140−3	44.45	25.4	25.4	12.71	156.6	75.84	80.75	5.6	42.2	36.4	48.9	61,500	10,250	22.20
160−3	50.80	31.75	28.58	14.29	185.9	95.45	90.45	6.4	48.2	41.6	58.5	78,900	13,500	30.02
180−3	57.15	35.72	35.71	17.46	210.2	101.7	108.5	7.2	54.2	46.8	65.8	101,400	15,500	38.22
200−3	63.50	38.10	39.69	19.85	227.2	110.75	116.45	8.0	60.3	52.0	71.6	130,500	18,250	49.02
240−3	76.20	47.63	47.63	23.81	219.0	135.85	143.15	9.5	72.4	62.4	87.8	195,000	24,250	71.6

HC Coil Conveyor Chains

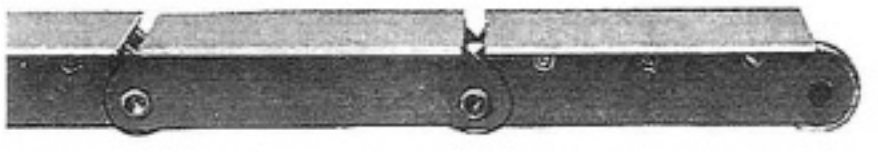

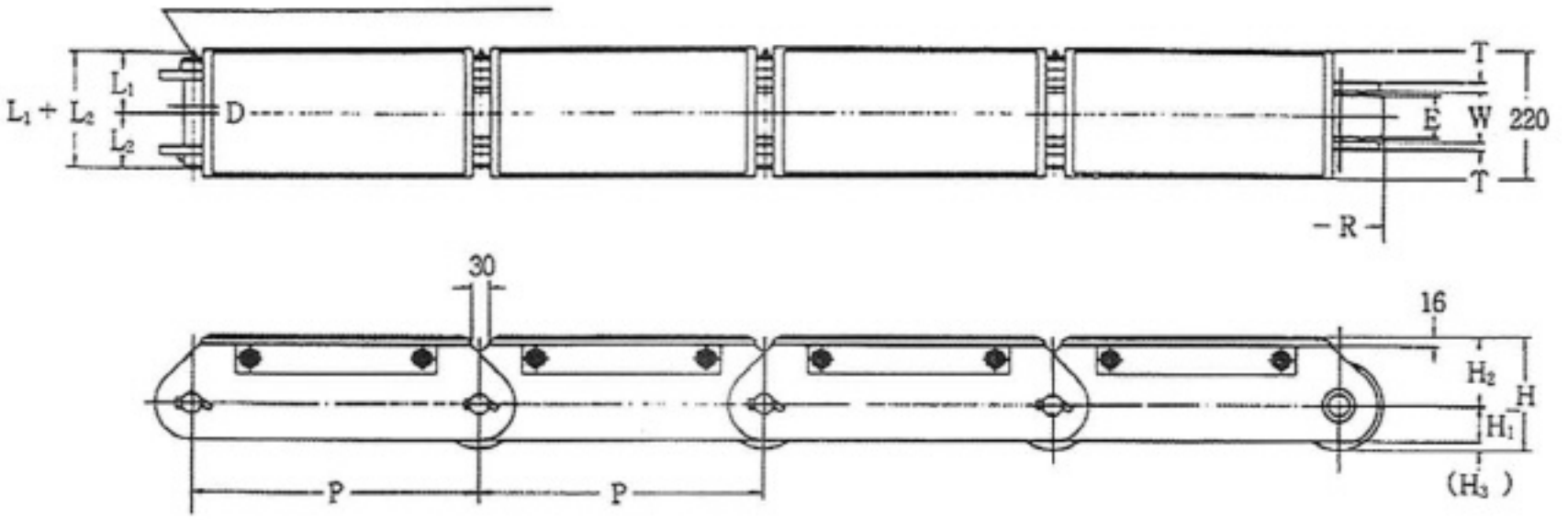

Dimension: mm

HC Chain No.	Pitch	Roller Dia	Roller Jointing Width	Inside Width	Thick-ness	Height				Dia	Pin				Average Weight	Max. Tensile Strength	Allowable Load on Roller	Average Ultimate Strength
	P	R	E	W	T	H	H_1	H_2	H_3	D	D_1	L_1+L_2	L_1	L_2	(kg.f/m)	(kg.f)	(kg.f/EA)	(kg.f)
CT 60300	300	125	60	65	12.7	171	42.5	108.5	20	28	36	165	88	77	90	8,500	3,000	60,000
CT 60400	400														82			
CT 60500	500														78			
CT 90300	300	135	65	79	12.7	182.5	54	115	13.5	30	36	179	95	84	99	12,800	3,600	90,000
CT 90400	400														91			
CT 90500	500														87			
CT130300	300	150	70	84	16	195	61	120	14	38	46	198	104	93	123	18,500	4,300	130,000
CT130400	400														112			
CT130500	500														105			
CT160400	400	175	80	91	16	227	69	139.5	18.5	41	46	205	108	97	135	22,800	5,700	160,000
CT160500	500														126			
CT160600	600														118			
CT200600	600	180	90	102.6	19	225	76	135	14	45	50	229	119	110	141	28,500	6,600	200,000

HC Light Type Trolley Conveyor Chains

1. Specifications

		L—3	L—5
Chain	Allowable Tensile Strength(kg)	230	600
	Ultimate Strength (kg)	3000	5000
	Weight(kg/m)	2.2	5.5
Hanger Pitch(mm)		151.1 or double	200 or double
Loaded Materials(kg)	Single Hanger	Max. 15	Max. 30
	Y. U—Hanger	Max. 30	Max. 60
Carrying Speed(m/min)		0.1~6.0	0.5~10

2. Chain and Hanger

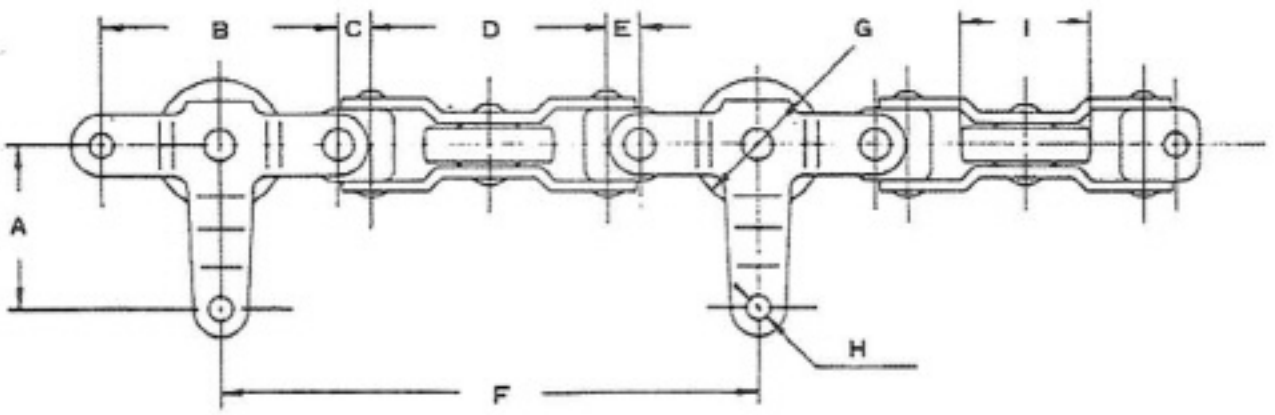

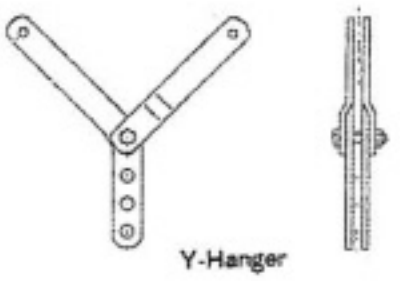
Y-Hanger

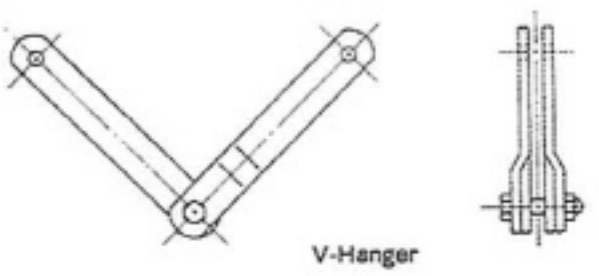
V-Hanger

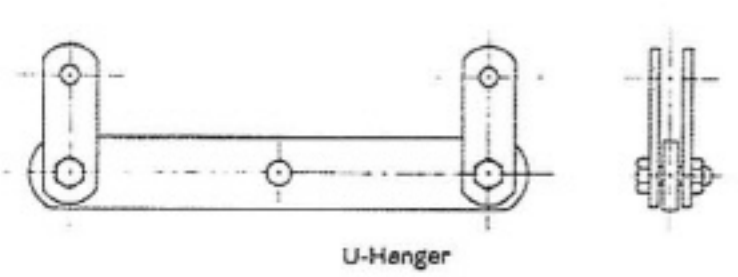
U-Hanger

	A	B	C	D	E	F	G	H	I	J	K
L—3	50	68.9	7.15	68.9	7.15	152.1	33.34	6.35	33.34	41.3	3.2
L—5	60	88	12	88	12	200	48	8.5	48	60.5	4.0

3. Drive Unit

a. L-3 : Gear Drive Type
b. L-5 : Caterpillar Type

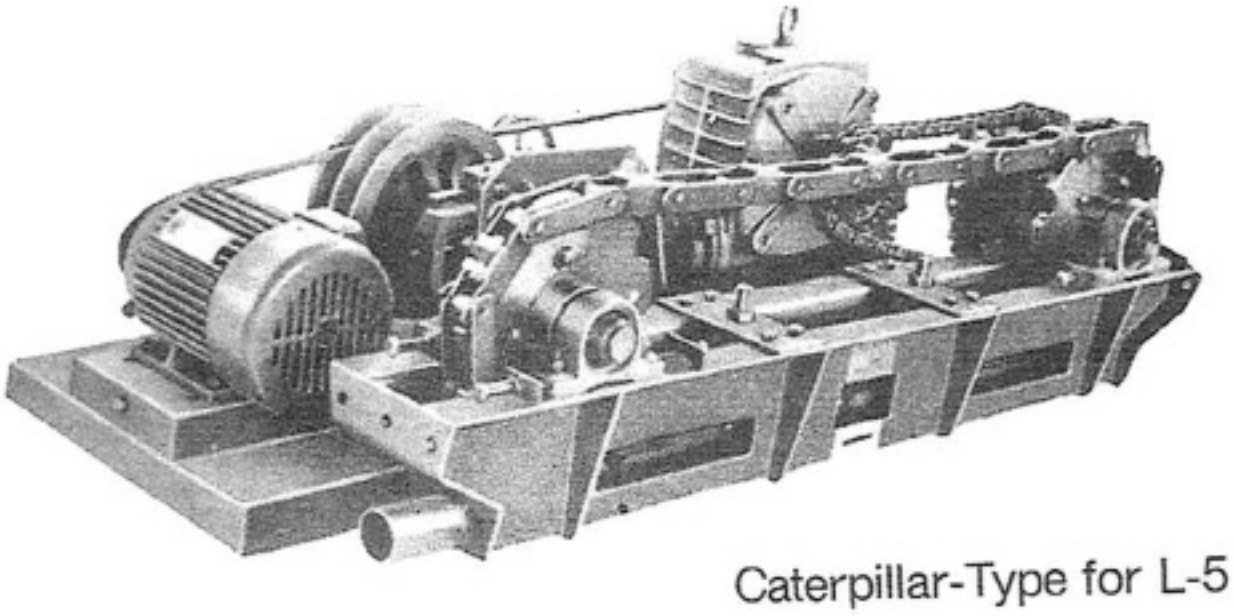

Caterpillar-Type for L-5

NZ-075 Trolley Conveyor Chains

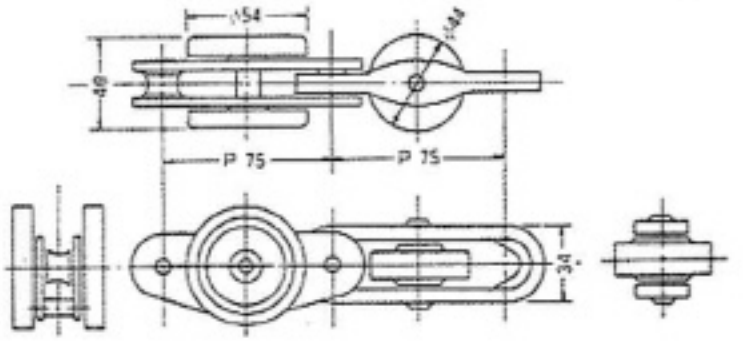

■ Specifications

Classification	Specification & Capacity	Classification	Specifications & Efficiency
Pitchotc	75mm	Horizontal Curved Radius	R 600
Average Ultimate Strength	5000kg.f	Vertical Degree Curved Radius	R 600
Weight loaded	In Cas Of Single Point Hanger-25kg	Horizontal Curved Angle	30°, 45°, 60°, 90°
	In Case Of Double Point Hanger-50kg	Vertical Curved Angle	30°, 45°, 60°, 90°, 180°

■ Types of Rail

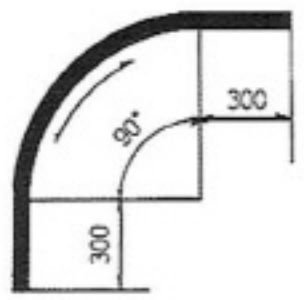

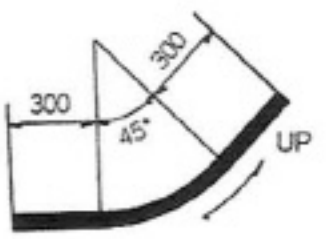

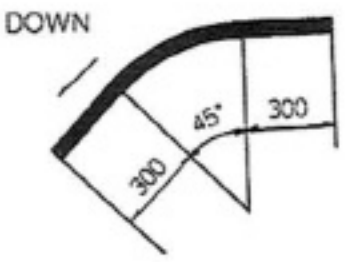

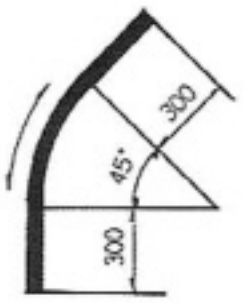

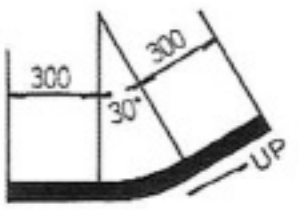

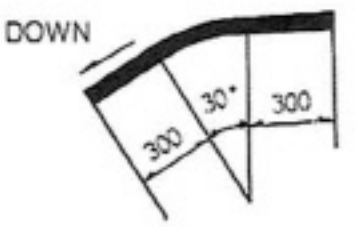

■ Drive Unit

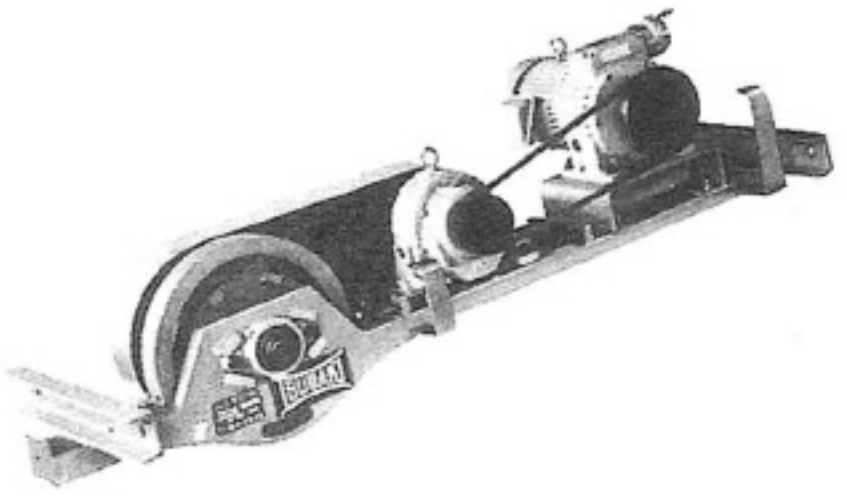

■ Take-Up Unit

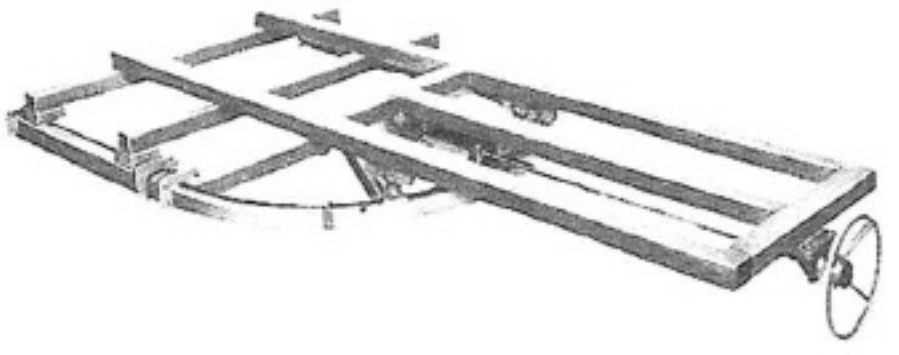

HC Trolley Conveyor Chains(Forged Type)

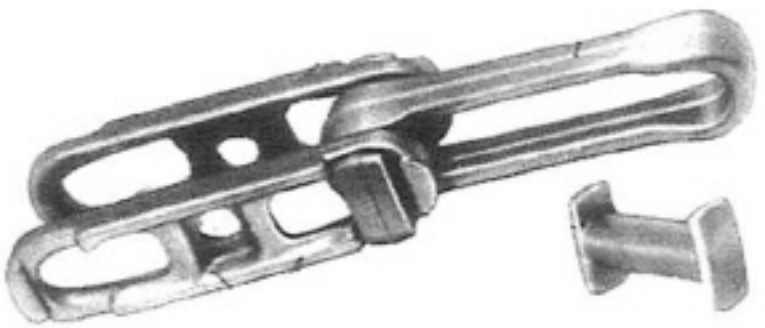

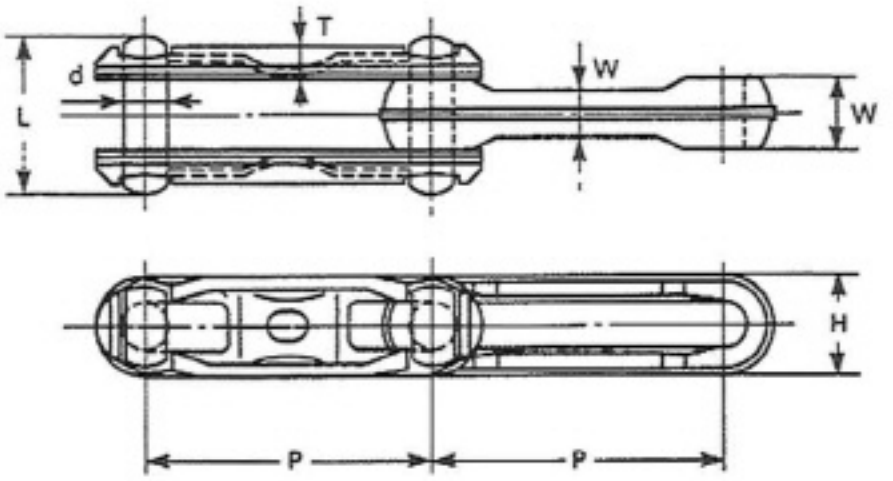

Dimension: mm

HC Chain No.	Pitch		Pin		Plate				Max. Allowable Tensile Strength(kg)	Average Ultimate Strength (kg.f)	Average Weight (kg/m)
	mm	inch	d	L	T	H	W	W'			
HC 348	76.2	3.0	12.7	44.1	9.9	27.9	18.8	13.0	1.000	10.900	3.3
HC 458	101.6	4.0	16.2	55.6	12.2	35.5	25.4	17.0	2.000	21.800	4.8
HC 678	152.4	6.0	22.5	77.0	17.1	50.8	31.8	21.0	3.300	38.500	10.0

TROLLEY

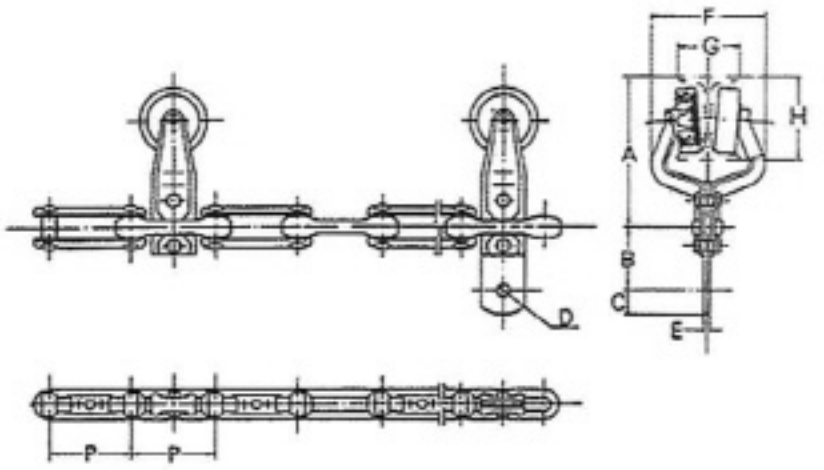

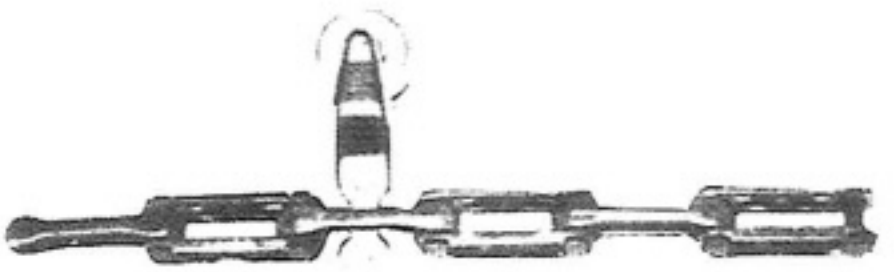

Dimension: mm

HC Chain No.	P	A	B	C	D	E	F	Trolley Weight/EA	Load		Rail
									Single Hanger	Road-Bar Hanger	
HCTR-348	76.2	139	80	20	13.5	6	125	1.2kg	100	200	I 75×75×T5
HCTR-458	101.6	182.6	73	19	14	10	133	2.4kg	200	400	I 100×75×T5
HCTR-678	152.4	250	73	32	20.6	12.7	166.7	8.8kg	400	800	I 150×75×T5

HC Caterpillar Drive Chains

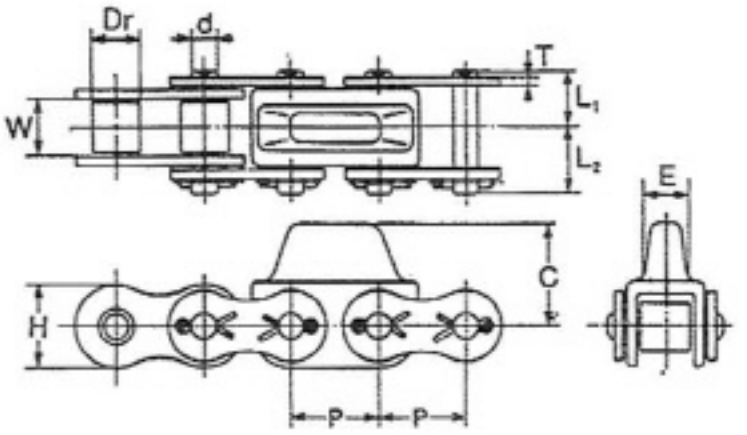

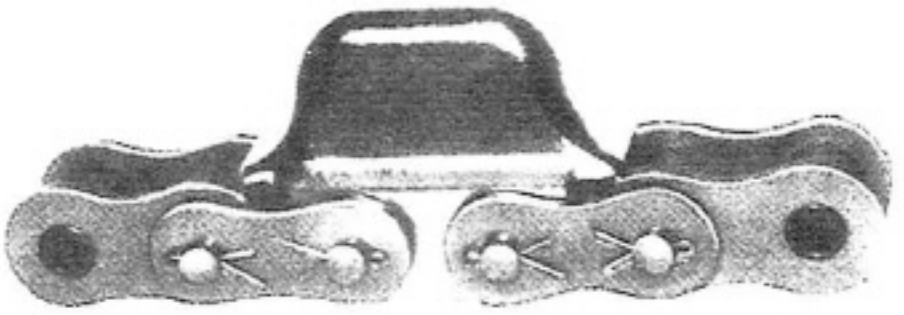

Dimension: mm

HC Chain No.	Pitch P	Inside Width W	Roller Dia Dr	Pin			Pitch		Caterpillar		Average Ultimate Strength (kg.f)
				Dia d	L_1	L_2	T	H	C	E	
HC160/348	50.8	31.75	28.58	14.29	32.45	37.15	6.4	48.2	54.6	18	27.500
HC160/458	50.8	31.75	28.58	14.29	32.45	37.15	6.4	48.2	60	26	27.500
HC160/678	50.8	31.75	28.58	14.29	32.45	37.15	6.4	48.2	78	32	27.500
3″	50.8	19.05	28.58	9.54	19.85	23.65	4.0	28.5	44.3	17.5	8,800
4″	50.8	19.05	28.58	9.54	19.85	23.65	4.0	28.5	49.3	25.4	8,800
4−12″	50.8	31.75	28.58	14.29	32.15	37.3	6.4	43.0	59.8	24.7	16,480

HC Pusher Chains

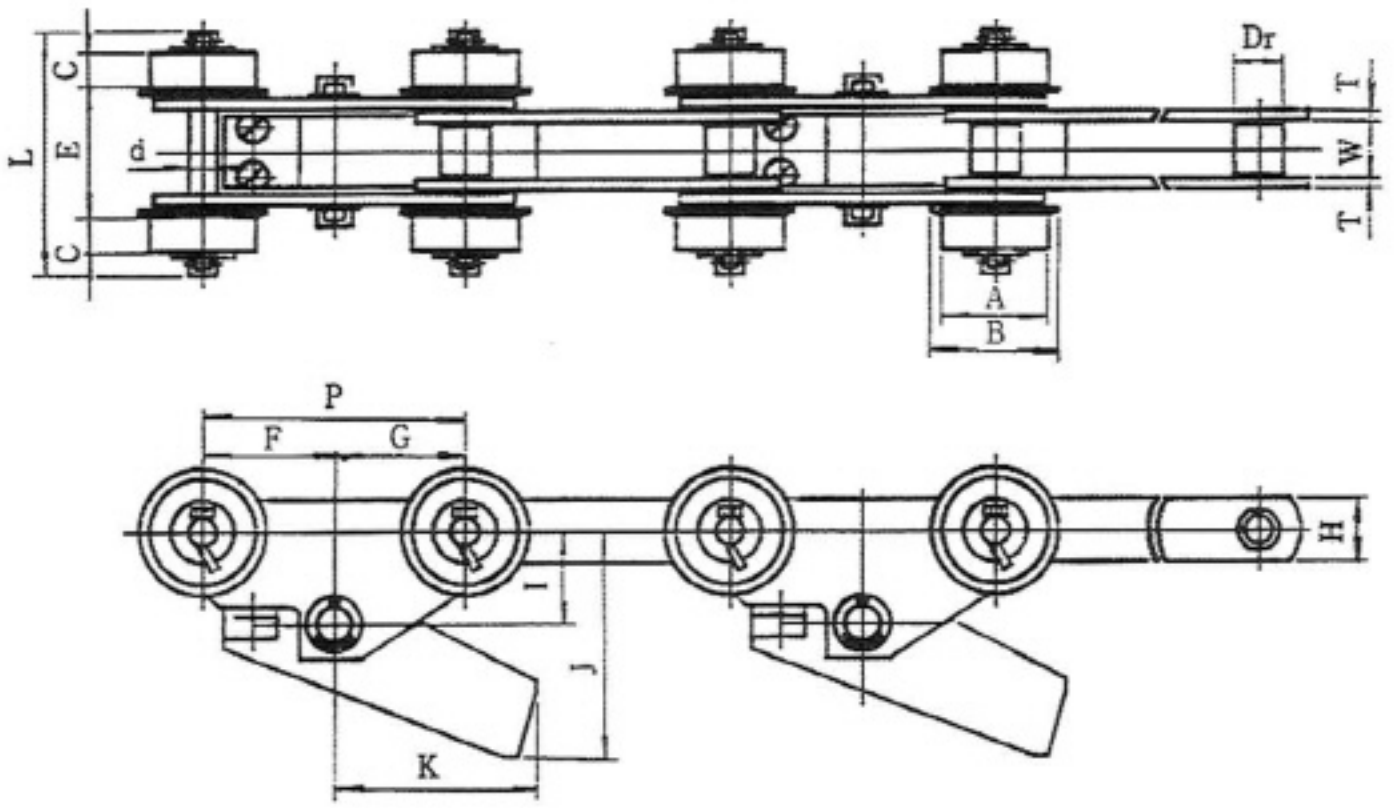

Dimension: mm

HC Chain No.	Pitch P	Inside Width W	Roller Dia Dr.	Pin		Plate		Side Roller			E	F	G	I	J	K	Average Ultimate Strength (kg.f)
				d	L	T	H	A	B	C							
RF 03075	75	16.1	15.88	7.95	58	3.2	22		57	6.5	31	15	60	50	120	75	7,100
RF 10150(80)	150	30	28.98	14.52	132.6	6.3	38.1	60	75	20	73	75	75	55	135	119	19,000
RF 10150(90)	150	30	28.98	14.52	132.6	6.3	38.1	60	75	20	73	75	75	55	145	119	19,000
RF 2102	63.5	19.05	39.69	19.8	120	4.8	40	48	62	20	55	31.75	31.75	65	143	52	11,000

HC Top Plate Chains

■ TT-Type Table Top Chain

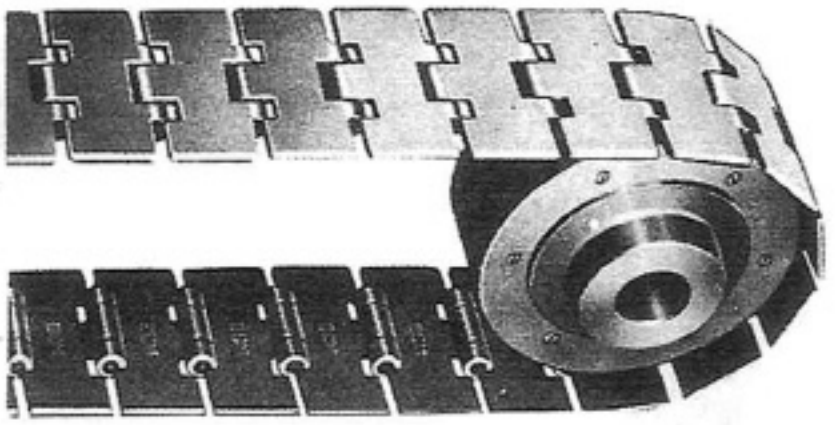

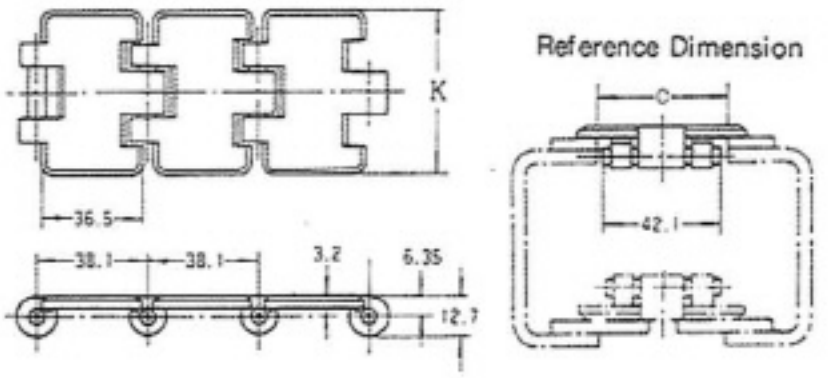

● Dimensions

Dimension:mm

HC Chain No.	Width of Top Plate K(mm)	Reference Dimension C	Max.Allowable Load (kg.f)	Average Weight (kg.f/m)
TT-24	63.5	44.5 ((Min))	120	2.2
TT-30	76.2			2.5
TT-32	82.6			2.6
TT-34	88.9			2.7
TT-40	101.6			2.9
TT-44	114.3			3.4
TT-50	127.0			3.5
TT-60	152.4			4.1
TT-64	165.1			4.4
TT-74	190.5			5.1

● Materials

Classification	Link Plate	Pin	Remarks
A	SUS 430	SUS 430	Standard
B	SUS 304	SUS 304	To order
C	SUS 304	SUS 304	To order

HC Top Plate Chains

■ TP-Type Top Plate Chain

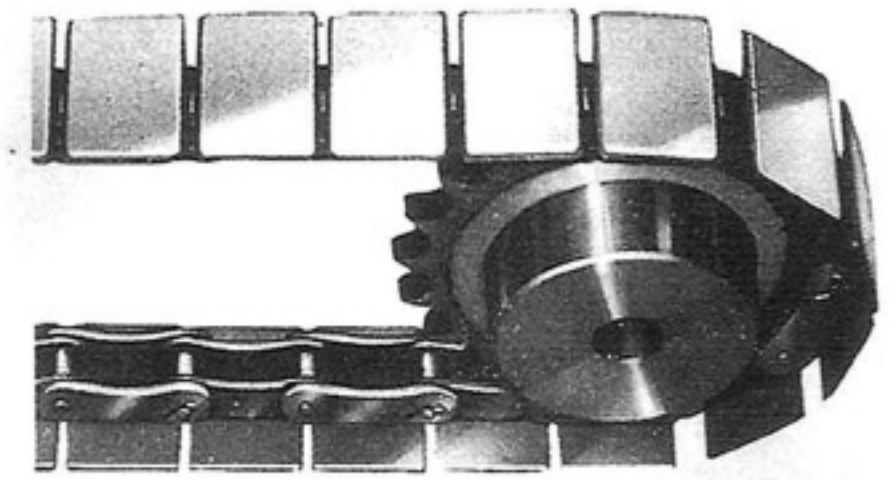

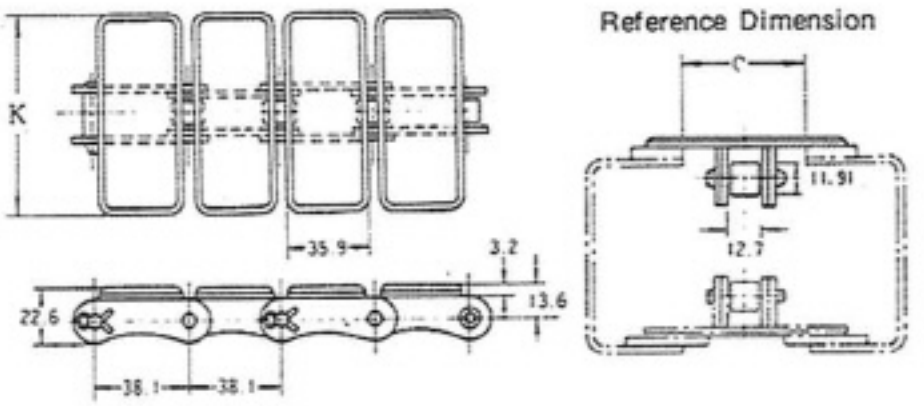

● Dimensions

Dimension: mm

HC Chain No.	Width of Top Plate (K)	Reference Dimension C	Max. Allowable Load(kg.f)	Average Weight (kg.f/m)
TP-22, TPW-22, TPWH-22	57.20	35	200	2.75
TP-24, TPW-24, TPWH-24	63.50			2.83
TP-30, TPW-30, TPWH-30	76.20			3.14
TP-32, TPW-32, TPWH-32	82.60			3.27
TP-36, TPW-36, TPWH-36	95.30			3.57
TP-40, TPW-40, TPWH-40	101.60			3.75
TP-44, TPW-44, TPWH-44	114.30			3.98
TP-46, TPW-46, TPWH-46	120.70			4.09
TP-50, TPW-50, TPWH-50	127.00			4.30
TP-60, TPW-60, TPWH-60	152.40			4.93
TP-64, TPW-64, TPWH-64	165.10			5.22
TP-74, TPW-74, TPWH-74	190.50			5.83
TPW-055M	55.0			2.72

● Materials

Classification	Link Plate	Pin	Remarks
A	SUS 430	Carbon Steel	Standard
B	SUS 304	SUS 304	To order
C	SUS 304	SUS 304	To order

HC Steel Block Chains

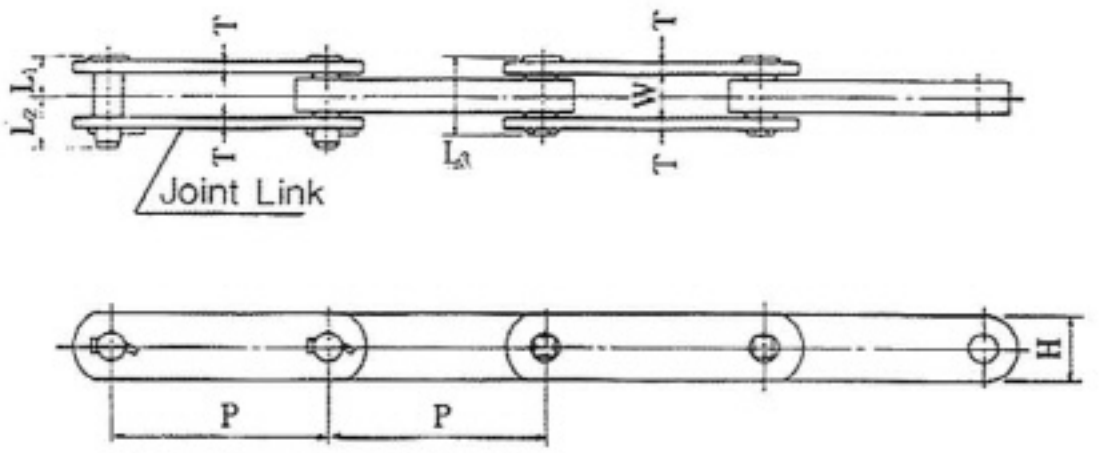

HC Chain No.	Pitch	Plate	Pin			Pin Link Plate Thickness	Pin Link Plate Width	Average Weight	Average Ultimate Strength
	P	H	L_1	L_2	L_3	T	W	(kg.f/m)	(kg.f)
NF 30150	150	38.1	24	32	49	7.9	23.3	7.0	31,500
NF 30200	200							6.6	
NF 40150	150	44.5	25.5	35.5	52	7.9	26.5	9.0	40,500
NF 40200	200							8.5	
NF 56200	200	54	29.5	40.5	60	9.5	29.5	12.3	56,500
NF 56250	250							12.0	
NF 63200	200	57	30.5	41.5	62	9.5	31.5	13.7	63,000
NF 63250	250							13.0	
NF 70200	200	63.5	31.5	42.5	64	9.5	33.5	16.2	73,500
NF 70250	250							15.5	
NF 90200	200	72	34.5	45.5	70	10.5	38	21.0	92,500
NF 90250	250							20.0	
NF115250	250	76.2	38	49	77	12.7	40	25.0	114,000
NF115300	300							24.0	
NF140250	250	85	44	54	88	14	47.5	32.0	143,000
NF140300	300							31.0	
NF180300	300	95	48.5	58.5	97	16	52.5	39.0	177,500
NF180350	350							37.8	
NF210300	300	110	51.5	61.5	103	16	59	50.0	219,500
NF210350	350							48.3	
NF250300	300	112	58.5	68.5	118	19	66	58.8	248,500
NF250350	350							56.7	
NF280300	300	122	58.5	68.5	118	19	67	66.0	277,500
NF280350	350							62.3	

■ Dog Types

1. Fixed Dog

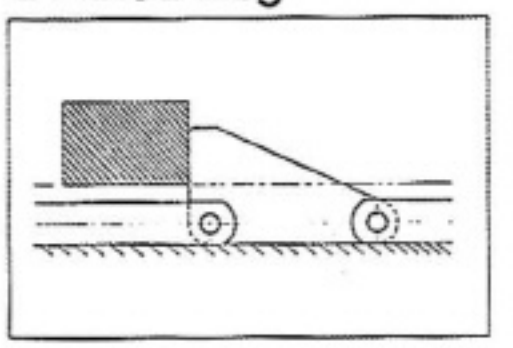

2. Tilt Dog

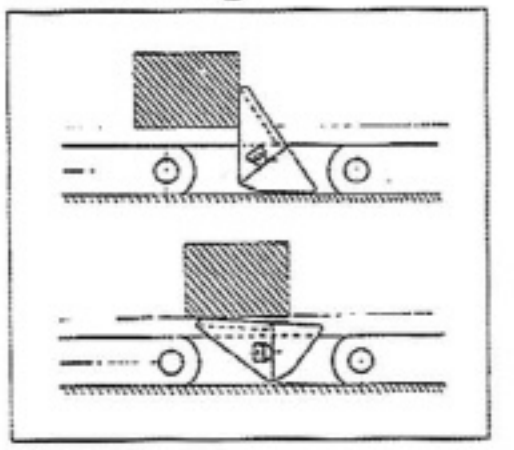

3. Duck Dog

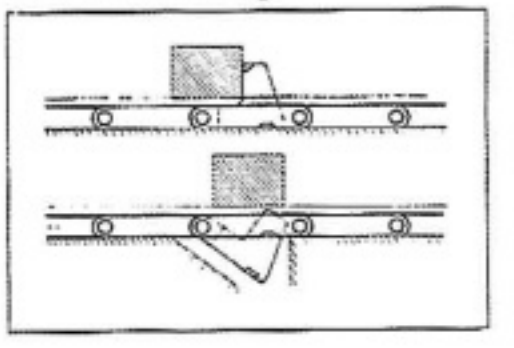

4. Tilt & Duck Dog

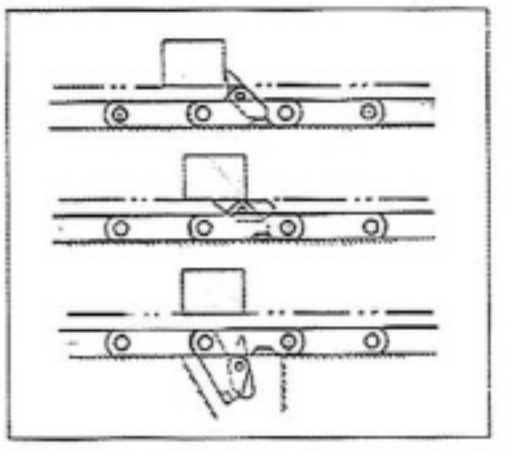

HC Standard Sprockets

1. Types

A Type

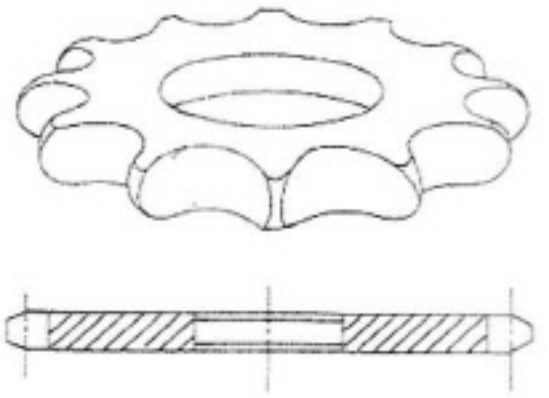

B Type

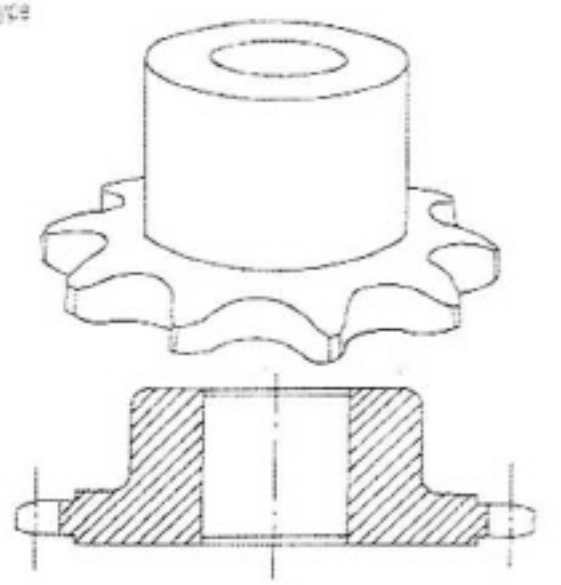

(Example of A Type)

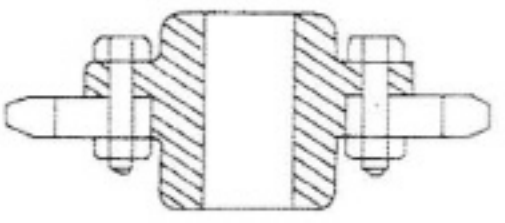

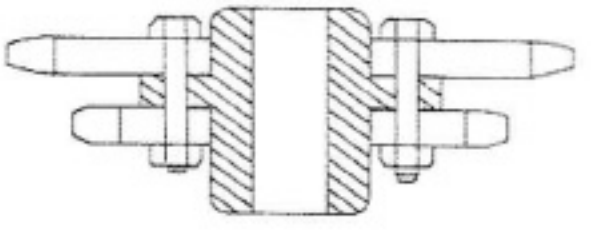

Double Strand

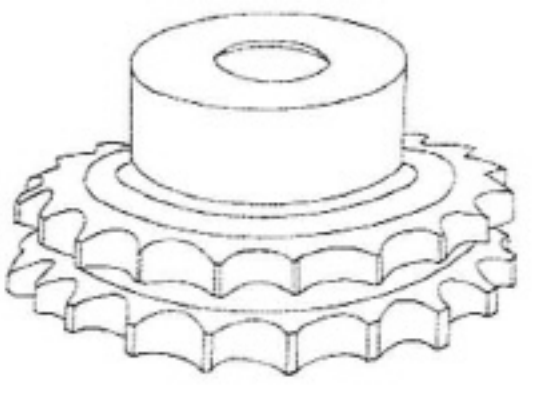

Type C

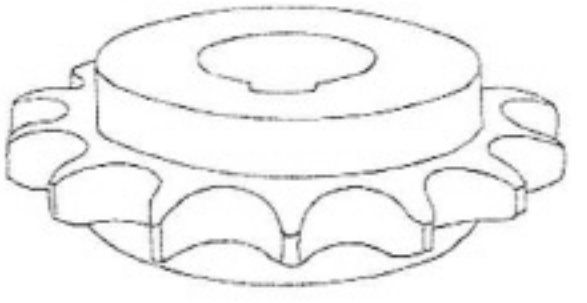

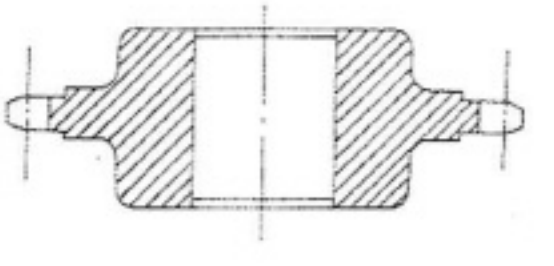

HC 35 Standard Sprocket

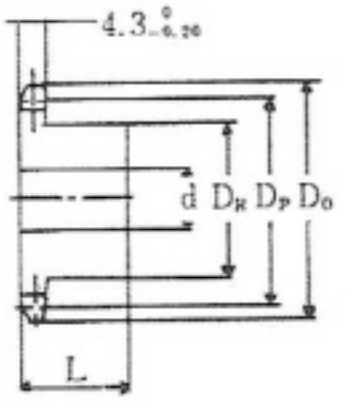

Single strand B Type

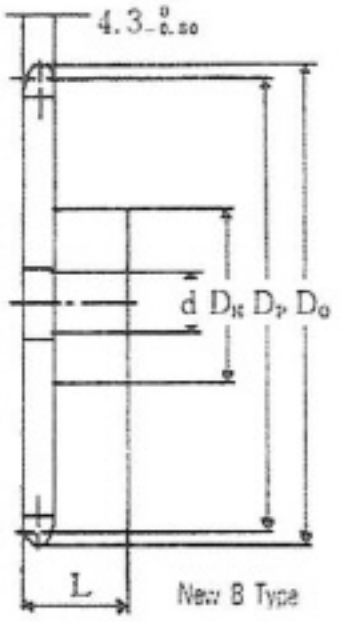

New B Type

Number of Teeth	Pitch Dia Dp	Outside Hole Do	Single Strand B Type						New B Type						Numbers of Teeth
			Axis Dia d		Boss		Average Weight (kg)	Material	Axis Dia d		Boss		Average Weight (kg)	Materi	
			Lower Hole Dia	Max	Dia DH	L			Lower Hole Dia	Max	Dia DH	L			
9	27.85	32	4	8	16	20	0.10								9
10	30.82	35	4	9	19	20	0.10								10
11	33.81	38	4	11	22	20	0.10								11
12	36.80	41	4	13	25	20	0.10								12
13	39.80	44	8	15	28	20	0.10								13
14	42.81	47	8	16	31	20	0.14								14
15	45.81	51	8	18	34	20	0.16								15
16	48.82	54	8	20	37	20	0.19								16
17	51.84	57	8	23	40	20	0.22								17
18	54.85	60	13	25	43	20	0.24								18
19	57.87	63	13	28	46	20	0.20	S35C							19
20	60.89	66	13	30	50	20	0.32								20
21	63.91	69	13	33	53	20	0.37								2
22	66.93	72	13	35	56	20	0.41								22
23	69.95	75	13	37	59	20	0.50								23
24	72.97	78	13	38	60	25	0.59								24
25	76.00	81	18	38	60	25	0.59								25
26	79.02	84	18	38	60	25	0.59								26
27	82.05	87	18	38	60	25	0.60								27
28	85.07	90	18	38	60	25	0.62								28
29	88.10	93	18	38	60	25	0.63								29
30	91.12	96	18	38	60	25	0.65								30
32	97.18	102	18	38	60	25	0.67								32
34	103.23	109	18	38	60	25	0.70								34
35	106.26	112	18	38	60	25	0.73								35
36	109.29	115	18	38	60	25	0.77								36
38	115.34	121							11	42	63	25	0.82		38
40	121.40	127							11	42	63	25	0.85		40
45	136.55	142							11	42	63	25	0.95		45
48	145.64	151							11	42	63	25	1.0	SS41	48
54	163.81	169							11	42	63	25	1.2		54
60	182.00	187							11	42	63	25	1.3		60
70	212.30	218							14	45	68	25	1.7		70
75	227.46	233							14	45	68	25	1.8		75

HC Standard Joint Links(C/L)

Clip Type Joint Link

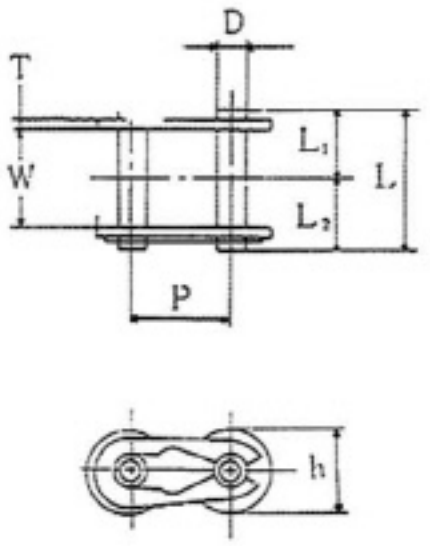

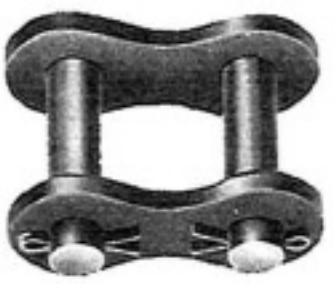

Cotter Type Joint Link

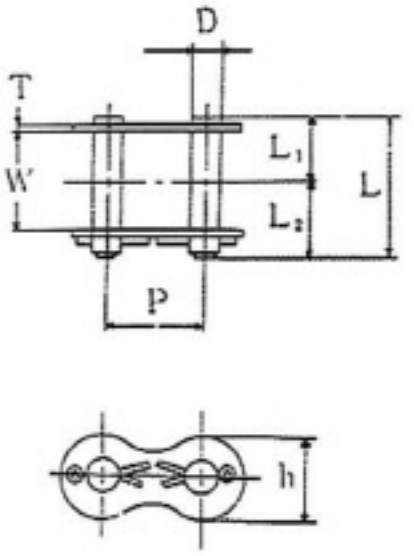

■ Dimensions

Dimension:mm

HC Chain No.	Pitch P	Inside Width W	Link Plate		Pin			Traverse Pitch	Pin Type
			Thickness T	Height H	Dia d	Overall Dimensions L_1	L_2		
HC 25	6.35	4.84	0.75	5.05	2.31	3.8	4.8	6.4	Clip Pin Type
HC 35	9.525	7.52	1.25	7.8	3.59	5.85	6.85	10.1	〃
HC 41	12.70	9.15	1.25	8.1	3.59	6.65	7.85	—	〃
HC 40	12.70	11.23	1.5	10.4	3.97	8.25	9.2	14.4	〃
HC 50	15.875	13.9	2.0	13.0	5.09	10.3	12.0	18.1	〃
HC 60	19.05	17.81	2.4	15.6	5.96	12.85	15.25	22.8	〃
HC 80	25.4	22.66	3.2	20.8	7.94	16.25	19.25	29.3	Cotter Pin Type
HC 100	31.75	27.51	4.0	26.0	9.54	17.75	22.85	35.8	〃
HC 120	38.10	35.51	4.8	31.2	11.11	24.9	28.9	45.4	〃
HC 140	44.45	37.24	5.6	36.4	12.71	26.9	31.7	48.9	〃
HC 160	50.80	45.27	6.4	41.6	14.29	31.85	36.85	58.5	〃
HC 180	57.15	50.9	7.2	46.8	17.46	35.65	42.45	65.8	〃
HC 200	63.50	54.94	8.0	52.0	19.85	39.0	44.8	71.6	〃
HC 240	76.20	67.87	9.5	62.4	23.81	47.9	55.5	87.8	〃

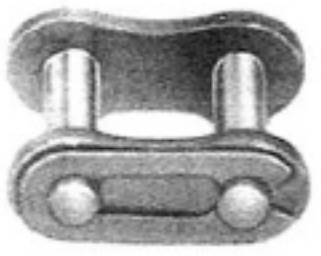

Clip Pin Type

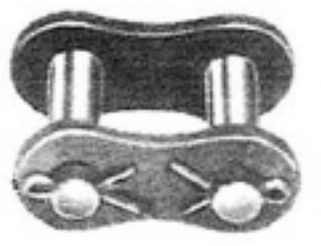

Cotter Pin Type

HC 40 Standard Sprocket

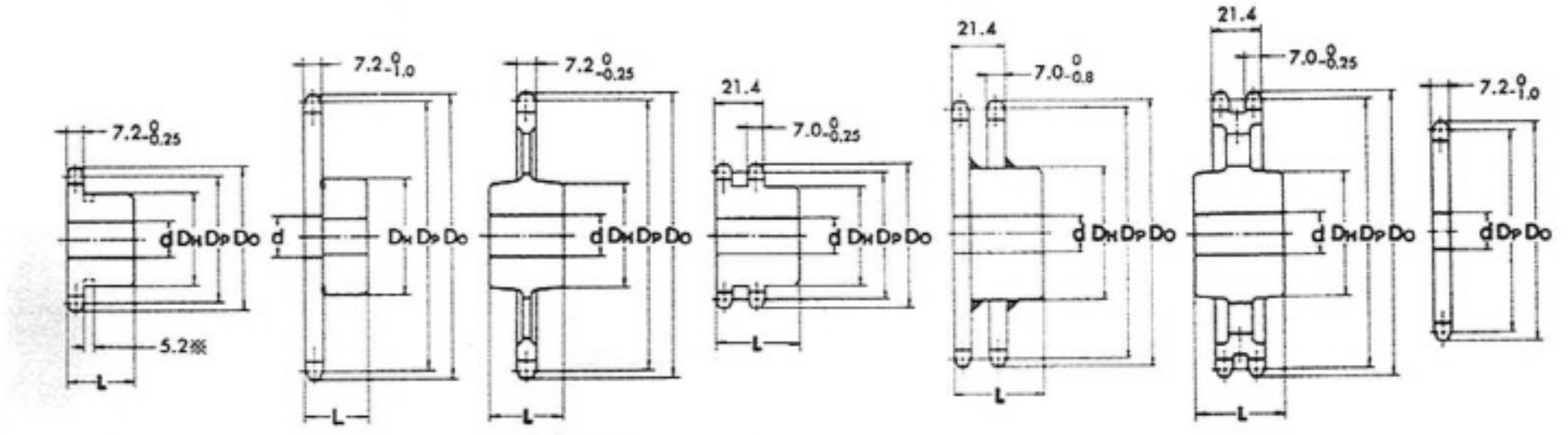

New B Type (welded) | New B Type (welded) | Single Strand C Type | New B Type (cut) | Double Strand New B Type | Double Strand C Type | A Type

No. of Teeth	Pitch Dp	Do	New B Type Axis Dia d Lower Hole Dia	New B Type Axis Dia d Max	New B Type Boss DH	New B Type Boss L	New B Type Av. Weight (kg)	New B Type Material	Single Strand C Type Axis Dia d Lower Hole Dia	Single Strand C Type Axis Dia d Max	Single Strand C Type Boss DH	Single Strand C Type Boss L	Single Strand C Type Av. Weight (kg)	Single Strand C Type Material	Double Strand B Type Axis Dia d Lower Hole Dia	Double Strand B Type Axis Dia d Max	Double Strand B Type Boss DH	Double Strand B Type Boss L	Double Strand B Type Av. Weight (kg)	Double Strand B Type Material	Double Strand C Type A Type Axis Dia d Lower Hole Dia	Double Strand C Type A Type Axis Dia d Max	Double Strand C Type A Type Boss DH	Double Strand C Type A Type Boss L	Double Strand C Type A Type Av. Weight (kg)	Double Strand C Type A Type Material	A Type Lower Hole Dia	A Type Aver weight	A Type Material	No. of Teeth
9	37.13	42	9.5	15	28	22	0.11	※																						9
10	41.10	46	9.5	16.5	32	22	0.14	※																						10
11	45.08	51	9.5	20	37	22	0.19	※																						11
12	49.07	53	9.5	22	40	22	0.22	※							9.5	18	32	35	0.34											12
13	53.07	58	12.5	20	37	22	0.23								12.5	20	37	35	0.39											13
14	57.07	63	12.5	24	42	22	0.28								12.5	24	42	35	0.47											14
15	61.08	67	12.5	28.5	46	22	0.34								12.5	28.5	46	35	0.56										16	0.14		15
16	65.10	71	12.5	30	50	22	0.40								12.5	30	50	35	0.65										16	0.16		16
17	69.12	75	12.5	32	54	22	0.46	cut							12.5	32	54	35	0.75	cut									16	0.21		17
18	73.14	78	12.5	35	57	22	0.51								12.5	35	57	35	0.85										16	0.21		18
19	77.16	83	12.5	39.5	62	22	0.59								12.5	39.5	62	35	0.98										16	0.24		19
20	81.18	88	12.5	45.5	67	25	0.76	S35C							12.5	45.5	67	40	1.3	S35C									16	0.26		20
21	85.21	92	12.5	45.5	71	25	0.85								12.5	47	71	40	1.4										16	0.29		21
22	89.24	96	12.5	50	75	25	0.95								12.5	50	75	40	1.6										16	0.32		22
23	93.27	98	12.5	50	77	25	1.0								12.5	50	77	40	1.7													23
24	97.30	104	12.5	42	63	25	0.84								12.5	55	83	40	1.9										16	0.38		24
25	101.33	108	12.5	42	63	25	0.88								12.5	59	87	40	2.1										16	0.41	SS41	25
26	105.36	112	12.5	42	63	25	0.92								12.5	62	91	40	2.3										16	0.45		26
27	109.40	116	12.5	42	63	25	0.96																									27
28	113.43	120	12.5	42	63	25	1.0																									28
30	121.50	128	12.5	42	63	25	1.1								12.5	73	106	40	3.0										16	0.60		30
32	129.57	137	16	45	68	28	1.3																						16	0.68		32
34	137.64	145	16	45	68	28	1.3																									34
35	141.68	149	16	45	68	28	1.4	welded							16	55	83	50	3.1		33	55	95	70	4.6				16	0.82		35
36	145.72	153	16	45	68	28	1.4		23	40	70	45	2.1							welded									16	0.87		36
38	153.79	161	16	45	68	28	1.5		23	40	70	45	2.2																			38
40	161.87	169	16	45	68	28	1.6		23	40	70	45	2.3		16	55	83	50	3.6		33	55	95	70	4.8				16	1.1		40
42	169.95	177	18	48	73	32	2.0	SS41	23	40	70	45	2.5	FC25						SS41						FC25						42
45	182.06	189	18	48	73	32	2.1		23	40	70	45	2.6		18	63	93	50	4.6		33	55	95	70	5.3				18	1.4		45
48	194.18	201	18	48	73	32	2.3		23	40	70	45	2.8																18	1.5		48
50	202.26	209																											18	1.7		50
54	218.42	226	18	48	73	32	2.8		23	40	70	45	3.0		18	63	93	50	5.8		33	55	95	70	6.5				18	2.0		54
60	242.66	250	18	48	73	32	3.2		23	40	70	45	3.4		18	63	93	50	6.7		33	55	95	70	7.6				18	2.4		60
65	262.87	270	23	55	83	32	3.9		26	45	75	50	3.8																			65
70	283.07	290	23	55	83	32	4.3		26	45	75	50	4.3																			70
75	303.28	311	23	55	93	32	4.8		26	45	75	50	5.0																			75

HC 50 Standard Sprocket

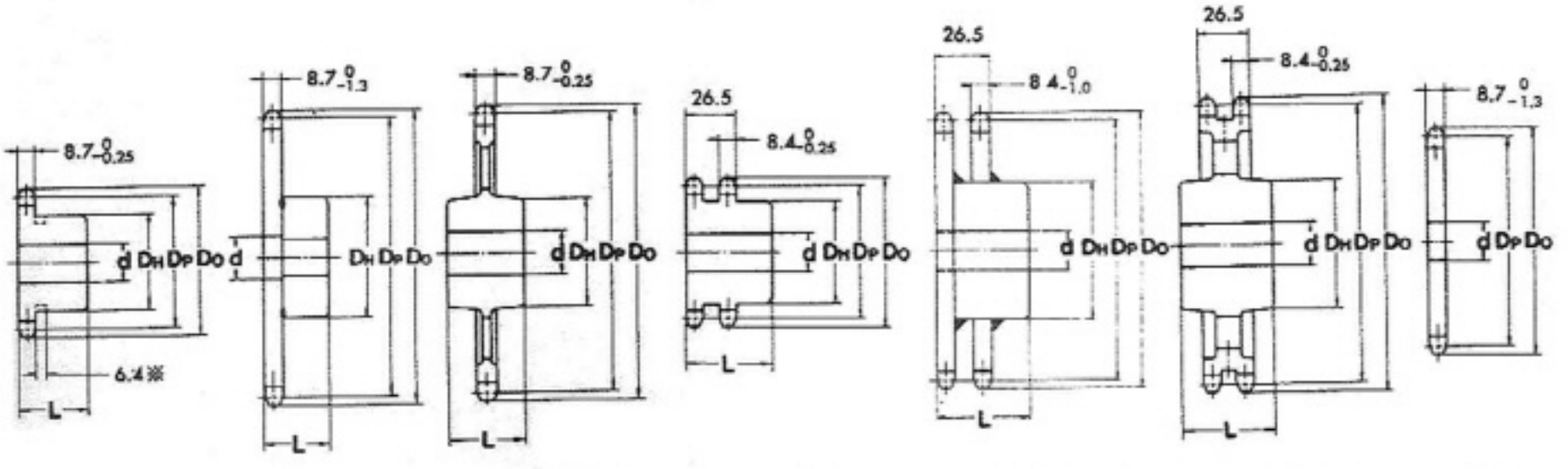

New B Type (welded) | New B Type (welded) | Single Strand C Type | New B Type (cut) | Double Strand New B Type (welded) | Double Strand C Type | A Type

No. of Teeth	Pitch Dia.	Do	New B Type: Axis Dia. d Lower Hole Dia.	New B Type: Axis Dia. d Max	New B Type: Boss DH	New B Type: Boss L	New B Type: Av. Weight (kg)	New B Type: Material	Single Strand C Type: Axis Dia. d Lower Hole Dia.	Single Strand C Type: Axis Dia. d Max	Single Strand C Type: Boss DH	Single Strand C Type: Boss L	Single Strand C Type: Av. Weight (kg)	Single Strand C Type: Material	Double Strand B Type: Axis Dia. d Lower Hole Dia.	Double Strand B Type: Axis Dia. d Max	Double Strand B Type: Boss DH	Double Strand B Type: Boss L	Double Strand B Type: Av. Weight (kg)	Double Strand B Type: Material	Double Strand C Type A Type: Axis Dia. d Lower Hole Dia.	Double Strand C Type A Type: Axis Dia. d Max	Double Strand C Type A Type: Boss DH	Double Strand C Type A Type: Boss L	Double Strand C Type A Type: Av. Weight (kg)	Double Strand C Type A Type: Material	A Type: Lower Hole Dia.	A Type: Aver weight	A Type: Material	No. of Teeth
9	46.42	53	9.5	19	34	25	0.20	※																						9
10	51.37	58	9.5	22	40	25	0.27	※																						10
11	56.35	63	12.5	24.5	46	25	0.33	※																						11
12	61.34	68	12.5	32	51	25	0.41	※							12.5	24	42	40	0.63											12
13	66.34	73	12.5	32	51	25	0.46	※							12.5	28.5	47	40	0.73											13
14	71.34	78	12.5	32	52	25	0.52								12.5	32	52	40	0.87										18	0.24		14
15	76.35	83	12.5	35	57	25	0.62								12.5	35	57	40	1.0										18	0.27		15
16	81.37	88	12.5	39.5	62	25	0.72								12.5	39.5	62	45	1.3										18	0.31		16
17	86.39	93	12.5	45.5	67	25	0.83								12.5	45.5	67	45	1.5										18	0.35		17
18	91.42	98	12.5	47.5	72	28	1.0	S35C							12.5	47.5	72	45	1.7	S35C									18	0.40		18
19	96.45	105	16.0	47.5	73	28	1.1								16.0	52	79	45	2.0										18	0.44		19
20	101.48	110	16.0	47.5	73	28	1.2								16.0	55	82	45	2.2										18	0.49		20
21	106.51	115	16.0	47.5	73	28	1.2								16.0	60	89	45	2.5										18	0.54		21
22	111.55	120	16.0	47.5	73	28	1.3								16.0	63	89	50	2.9										18	0.60		22
23	116.58	125	16.0	47.5	73	28	1.3								16.0	67	99	50	3.3												SS41	23
24	121.62	130	16.0	47.5	73	28	1.4								16.0	70	102	50	3.6										18	0.71		24
25	126.66	135	16.0	47.5	73	28	1.5								16.0	75	109	50	4.0										18	0.78		25
26	131.70	140	18	48	73	28	1.5								18	63	93	50	3.4										18	0.84		26
27	136.74	145	18	48	73	28	1.5																									27
28	141.79	150	18	48	73	28	1.6																									28
30	151.87	161	18	48	73	28	1.8								18	63	93	50	4.0										18	1.1		30
32	161.96	171	18	48	73	28	1.9																						18	1.3		32
34	172.05	181	18	48	73	28	2.1																									34
35	177.10	186	18	48	73	28	2.2								18	63	93	50	4.8		33	60	100	80	5.6				18	1.5		35
36	182.14	191	23	55	83	35	2.7		23	45	75	50	3.1																23	1.6		36
38	192.24	201	23	55	83	35	2.9		23	45	75	50	3.2																			38
40	202.33	211	23	55	83	35	3.1		23	45	75	50	3.3		23	66	98	50	6.2		33	60	100	80	7.0				23	2.0		40
42	212.43	221	23	55	83	35	3.3	SS41	23	45	75	50	3.6	FC25						SS41						FC25						42
45	227.58	237	23	55	83	35	3.6		23	45	75	50	3.8		23	66	98	56	7.3		33	60	100	80	8.2				23	2.5		45
48	242.73	252	23	55	83	35	4.0		23	45	75	50	4.0																23	2.9		48
50	252.83	262																											23	3.1		50
54	273.02	282	23	55	83	35	4.6		23	45	75	50	4.5		23	66	98	63	9.9		33	60	100	80	8.6				23	3.6		54
60	303.33	312	23	55	83	35	5.6		28	51	85	60	5.8		23	66	98	63	11.7		33	60	100	80	8.9				23	4.6		60
65	328.58	338	23	63	93	40	6.9		28	51	85	60	6.3																			65
70	353.84	363	23	63	93	40	7.7		28	51	85	60	6.8																			70
75	379.10	388	23	63	93	40	8.6		28	51	85	60	7.2																			75

HC 60 Standard Sprocket

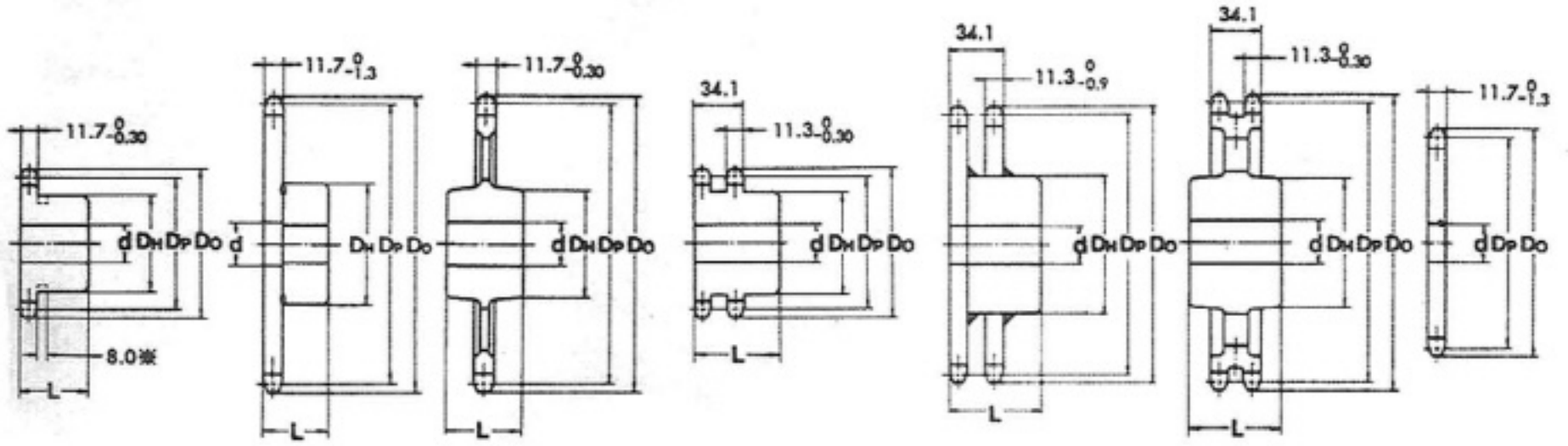

New B Type (welded) | New B Type (welded) | Single Strand C Type | New B Type (cut) | Double Strand New B Type (welded) | Double Strand C Type | A Type

No of Teeth	Pitch Dp	Do	New B Type Axis Dia d Lower Hole Dia	New B Type Axis Dia d Max	New B Type Boss DH	New B Type Boss L	New B Type Av. Weight (kg)	New B Type Material	Single Strand C Type Axis Dia d Lower Hole Dia	Single Strand C Type Axis Dia d Max	Single Strand C Type Boss DH	Single Strand C Type Boss L	Single Strand C Type Av. Weight (kg)	Single Strand C Type Material	Double Strand B Type Axis Dia d Lower Hole Dia	Double Strand B Type Axis Dia d Max	Double Strand B Type Boss DH	Double Strand B Type Boss L	Double Strand B Type Av. Weight (kg)	Double Strand B Type Material	Double Strand C Type A Type Axis Dia d Lower Hole Dia	Double Strand C Type A Type Axis Dia d Max	Double Strand C Type A Type Boss DH	Double Strand C Type A Type Boss L	Double Strand C Type A Type Av. Weight (kg)	Double Strand C Type A Type Material	A Type Lower Hole Dia	A Type Aver weight	A Type Material	No of Teeth
9	55.70	63	9.5	24.5	43	32	0.40	※																						9
10	61.65	68	12.5	30.0	49	32	0.49	※																						10
11	67.62	76	12.5	32.0	51	32	0.60	※																						11
12	73.60	82	12.5	32.0	51	32	0.69								12.5	32	51	50	1.1											12
13	79.60	88	16	35.0	57	32	0.81								16.0	35	57	50	1.3								18	0.42		13
14	85.61	93	16	39.5	62	32	0.96								16.0	39.5	62	56	1.7								18	0.48		14
15	91.62	99	16	45.5	68	32	1.1								16.0	45.5	68	56	2.0								18	0.56		15
16	97.65	107	16	47.5	73	32	1.3								16.0	50	76	56	2.4								18	0.64		16
17	103.67	113	16	47.5	73	32	1.4								16.0	55	82	56	2.8								18	0.72		17
18	109.71	119	16	55	83	40	2.0	S35C							16.0	59	87	56	3.1	S35C							18	0.81		18
19	115.74	126	16	55	83	40	2.1								16.0	63	95	56	3.6								18	0.90		19
20	121.78	132	16	55	83	40	2.2								16.0	69	101	56	4.1								18	1.0		20
21	127.82	138	16	55	83	40	2.3								16.0	75	107	56	4.5								18	1.1		21
22	133.86	144	16	55	83	40	2.5								16.0	78	113	56	5.0								18	1.2		22
23	139.90	150	18	55	83	40	2.5								18	86	98	56	4.6											23
24	145.95	156	18	55	83	40	2.6								18	66	98	56	4.8								18	1.4		24
25	151.99	162	18	55	83	40	2.7								18	66	98	56	5.0								18	1.6		25
26	158.04	168	18	55	83	40	2.9								18	66	98	56	5.3								18	1.7	SS41	26
27	164.09	174	18	55	83	40	3.0																							27
28	170.14	180	18	55	83	40	3.1		28	51	85	50	2.7																	28
30	182.25	193	18	56	83	40	3.4		28	51	85	50	3.2		18	66	98	56	6.5		33	60	100	80	7.4		18	2.3		30
32	194.35	205	18	55	83	40	3.7		28	51	85	50	3.5														18	2.6		32
34	206.46	217	18	55	83	40	4.0		28	51	85	50	3.9																	34
35	212.52	223	18	55	83	40	4.2		28	51	85	50	4.1		18	66	98	56	7.8		33	65	105	85	9.5		18	3.1		35
36	218.57	229	18	55	83	40	4.4		28	51	85	50	4.2														18	3.3		36
38	230.69	241	18	55	83	40	4.8	SS41	28	51	85	55	4.6	FC25						SS41						FC25				38
40	242.80	253	18	56	83	40	5.1		28	51	85	55	5.0		18	66	98	56	9.7		33	65	105	85	10.9		18	4.0		40
42	254.92	266	23	63	93	45	6.0		28	51	85	55	5.0																	42
45	273.09	284	23	63	93	45	6.7		28	51	85	55	5.7		23	75	107	71	12.8		33	65	105	85	15.3		23	5.1		45
48	291.27	302	23	63	93	45	7.4		28	51	85	55	6.4														23	5.8		48
50	303.39	314																									23	6.3		50
54	327.63	338	23	63	93	45	8.9		28	51	85	55	7.5		23	75	107	71	18.0		33	65	105	85	19.0		23	7.4		54
60	363.99	375	23	63	93	45	10.6		33	60	100	70	9.2		23	75	107	71	21.5		38	70	115	90	22.0		23	9.1		60
65	394.30	405	28	75	107	45	12.8		33	60	100	70	10.2																	65
70	424.61	436	28	75	107	45	14.4		33	60	100	70	11.1																	70
75	454.92	466	28	75	107	45	16.3		33	60	100	70	12.7																	75

HC 80 Standard Sprocket

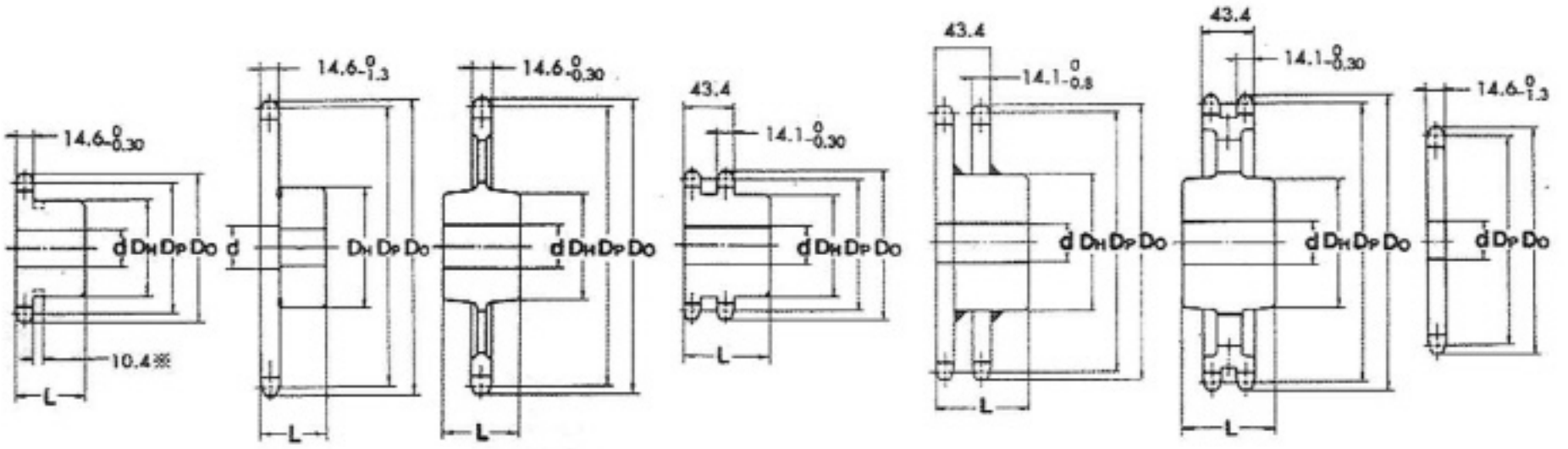

New B Type (welded) | New B Type (welded) | Single Strand C Type | New B Type (cut) | Double Strand New B Type (welded) | Double Strand C Type | A Type

No. of Teeth	Pitch Dia Dp	Do	New B Type Axis Dia d Lower Hole Dia	New B Type Axis Dia d Max	New B Type Boss DH	New B Type Boss L	New B Type Av. Weight (kg)	New B Type Material	Single Strand C Type Axis Dia d Lower Hole Dia	Single Strand C Type Axis Dia d Max	Single Strand C Type Boss DH	Single Strand C Type Boss L	Single Strand C Type Av. Weight (kg)	Single Strand C Type Material	Double Strand B Type Axis Dia d Lower Hole Dia	Double Strand B Type Axis Dia d Max	Double Strand B Type Boss DH	Double Strand B Type Boss L	Double Strand B Type Av. Weight (kg)	Double Strand B Type Material	Double Strand C Type A Type Axis Dia d Lower Hole Dia	Double Strand C Type A Type Axis Dia d Max	Double Strand C Type A Type Boss DH	Double Strand C Type A Type Boss L	Double Strand C Type A Type Av. Weight (kg)	Double Strand C Type A Type Material	A Type Lower Hole Dia	A Type Aver weight	A Type Material	No. of Teeth
9	74.26	85	16.0	35	58	40	0.87	※																						9
10	82.20	93	16.0	32	52	40	0.97																							10
11	90.16	101	16.0	38	60	40	1.2																							11
12	98.14	108	19.0	45	67	40	1.5								19	45.5	67	63	2.5											12
13	106.14	118	19.0	50	77	40	1.9								19	50	77	63	3.1								23	0.93		13
14	114.15	127	19.0	50	77	40	2.0								19	58	86	63	3.7								23	1.1		14
15	122.17	135	19.0	63	93	40	2.6								19	64	94	63	4.3								23	1.2		15
16	130.20	143	19.0	63	93	40	2.8	S35C							19	70	102	71	5.5	S35C							23	1.4		16
17	138.23	151	19.0	63	93	40	3.0								19	76	110	71	6.4								23	1.6		17
18	146.27	159	19.0	63	93	40	3.2								23	66	98	71	6.0								23	1.8		18
19	154.32	167	23	63	93	40	3.4								23	66	98	71	6.4								23	2.0		19
20	162.37	176	23	63	93	40	3.6								23	75	107	71	7.6								23	2.2		20
21	170.42	184	23	63	93	40	3.8								28	75	107	71	7.8								23	2.5		21
22	178.48	192	28	75	107	45	4.8		33	55	95	60	4.3		28	80	117	71	8.8		38	75	115	100	7.1		28	2.7		22
23	186.54	200	28	75	107	45	5.1		33	55	95	60	4.5		28	80	117	71	9.3		38	75	115	100	7.3					23
24	194.60	208	28	75	107	45	5.4		33	55	95	60	4.6		28	80	117	80	10.5		38	75	115	100	7.5		28	3.2		24
25	202.66	216	28	75	107	45	5.6		33	55	95	60	4.9		28	80	117	80	11.1		38	75	115	100	7.7		28	3.5	SS41	25
26	210.72	224	28	75	107	45	5.9		33	55	95	60	5.0		28	80	117	80	11.7		38	75	115	100	7.9		28	3.8		26
27	218.79	233	28	75	107	45	6.1		33	55	95	60	5.4																	27
28	226.86	241	28	75	107	45	6.5		33	55	95	65	5.7				117													28
30	243.00	257	28	75	107	45	7.1		33	55	95	65	6.4	FC25	28	80	117	80	14.2		38	75	115	100	8.7	FC25	28	5.0		30
32	259.14	273	28	75	107	45	7.8		33	55	95	65	6.6														28	5.8		32
34	275.29	289	28	75	107	45	8.5		33	55	95	65	7.2																	34
35	283.36	297	28	75	107	45	8.9		33	55	95	65	7.6		28	80	117	80	17.9		43	80	130	105	12.0		28	6.9		35
36	291.43	306	33	80	117	50	10.1	SS41	33	55	95	65	7.9							SS41							33	7.3		36
38	307.58	322	33	80	117	50	10.9		38	65	105	80	8.8																	38
40	323.74	338	33	80	117	50	11.8		38	65	105	80	9.9		33	89	127	90	23.7		43	80	130	105	15.7		33	9.0		40
42	339.89	354	33	80	117	50	12.7		38	65	105	80	10.5																	42
45	364.12	378	33	80	117	50	14.2		38	65	105	80	11.4		33	89	127	90	28.4		43	80	130	105	18.8		33	11.0		45
48	388.36	403	33	80	117	50	15.8		38	65	105	80	12.0														33	13.0		48
50	404.52	419																									33	14.0		50
54	436.84	451	33	80	117	50	19.2		38	65	105	80	14.0		33	89	127	90	38.5		43	80	130	105	21.3		33	16.0		54
60	485.33	500	33	80	117	50	23.1		38	65	105	80	17.6		33	89	127	90	46.2		43	80	130	105	22.1		33	20.0		60
65	525.73	540							43	76	125	90	22.5																	65
70	566.15	581	33	89	127	63	32.1		43	76	125	90	24.0																	70
75	606.56	621	33	89	127	63	36.2		43	76	125	90	29.0																	75

HC 100 Standard Sprocket

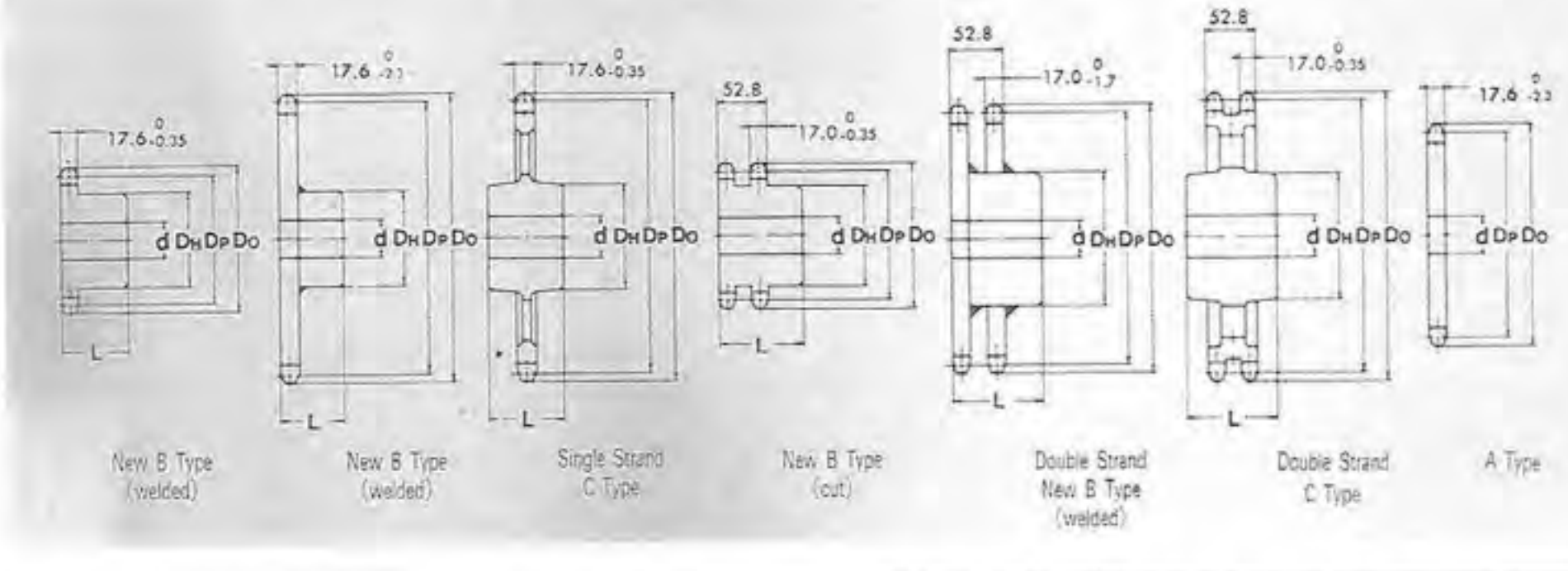

No. of Teeth	Pitch Dia	Do	New B Type						Single Strand C Type						Double Strand B Type						Double Strand C Type A Type						A Type			No. of Teeth
			Axis Dia d		Boss		Av. Weight (kg)	Material	Axis Dia d		Boss		Av. Weight (kg)	Material	Axis Dia d		Boss		Av. Weight (kg)	Material	Axis Dia d		Boss		Av. Weight (kg)	Material	Lower Hole Dia	Aver weight	Material	
			Lower Hole Dia	Max	DH	L			Lower Hole Dia	Max	DH	L			Lower Hole Dia	Max	DH	L			Lower Hole Dia	Max	DH	L						
10	102.75	117	18	43	65	50	1.9																							10
11	112.70	127	23	50	75	50	2.3																							11
12	122.67	138	23	57	86	50	2.9								23	58	86	80	5.0											12
13	132.67	148	23	59	88	50	3.1	S35C							23	65	95	80	6.0								28	1.7		13
14	142.68	158	23	59	88	50	3.5								23	72	105	80	7.1	S35C							28	2.0		14
15	152.71	168	28	66	98	50	4.2								28	66	98	80	7.1								28	2.3		15
16	162.74	179	28	66	98	50	4.6								28	66	98	80	7.7								28	2.6		16
17	172.79	189	28	75	107	50	5.3								28	75	107	80	8.9								28	3.0		17
18	182.84	199	28	75	107	50	5.7								28	75	107	80	9.6								28	3.4		18
19	192.90	209	28	75	107	50	6.1								28	89	127	90	12.7								28	3.7		19
20	202.95	220	28	75	107	50	6.5								28	89	127	90	13.5									4.1		20
21	213.03	230	28	75	107	50	7.0								28	99	127	90	14.3								28	4.6		21
22	223.10	240	33	80	117	56	7.9		38	70	115	80	8.5														33	5.1		22
24	243.25	260	33	80	117	56	8.8		38	70	115	80	9.0		33	95	137	90	17.8		48	85	140	110	19.6		33	6.1	SS41	24
25	253.32	270	33	80	117	56	9.3		38	70	115	80	9.2																	25
26	263.40	281	33	80	117	56	9.8		38	70	115	80	9.5														33	7.2		26
28	283.57	301	33	80	117	56	10.9		38	70	115	80	10.8							SS41										28
30	303.75	321	33	80	117	56	12.1		38	70	115	80	12.4		33	95	137	90	24.3		48	85	140	110	23.9		33	9.6		30
32	323.92	341	33	80	117	56	13.4		43	76	125	90	14.0														33	10.0		32
35	334.20	372	33	89	127	63	16.6		43	76	125	90	16.5	FC25	33	95	137	90	30.9		48	85	140	110	30.2	FC25	33	12.0		35
40	404.67	422	33	89	127	63	20.4	SS41	43	76	125	90	18.5		33	103	147	100	40.7		53	90	150	120	34.2		33	16.0		40
45	455.16	473	33	89	127	63	24.7		43	76	125	90	21.0		33	103	147	100	49.3		53	90	150	120	42.5		33	21.0		45
48	485.45	503	33	89	127	63	27.5		43	76	125	90	23.0														33	24.0		48
54	545.05	564	33	103	147	80	37.4		43	76	125	90	27.0														33	30.0		54
60	606.65	624	33	103	147	80	44.3		48	85	140	100	35.3		33	103	147	125	68.3	※※	53	90	150	120	60.7		33	38.0		60
70	707.68	726	38	103	147	100	44.7	※※※	48	85	140	100	43.5																	70
75	758.20	777	38	103	147	100	47.0	※※	48	85	140	100	48.0																	75

HC 120 Standard Sprocket

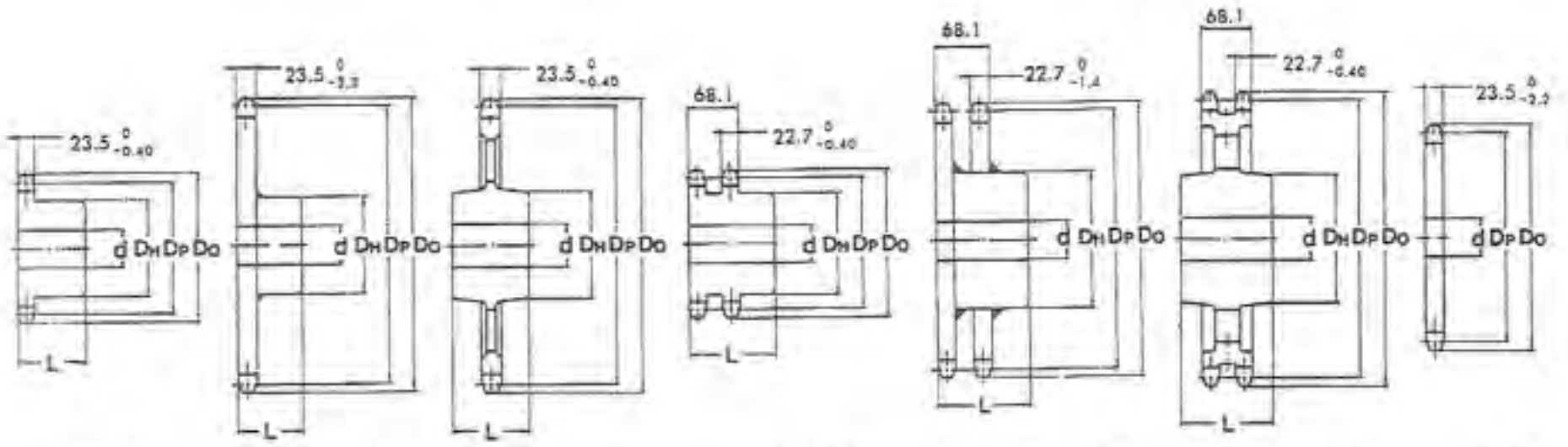

New B Type (welded) | New B Type (welded) | Single Strand C Type | New B Type (cut) | Double Strand New B Type (welded) | Double Strand C Type | A Type

No of Teeth	Pitch Dp	Do	New B Type						Single Strand C Type						Double Strand B Type						Double Strand C Type A Type						A Type			No of Teeth
			Axis Dia d		Boss		Av. Weight (kg)	Material	Axis Dia d		Boss		Av. Weight (kg)	Material	Axis Dia d		Boss		Av. Weight (kg)	Material	Axis Dia d		Boss		Av. Weight (kg)	Material	Lower Hole Dia	Av. weight	Material	
			Lower Hole Dia	Max	DH	L			Lower Hole Dia	Max	DH	L			Lower Hole Dia	Max	DH	L			Lower Hole Dia	Max	DH	L						
10	123.30	140	23	51	78	56	3.2																							10
11	135.24	153	28	60	91	56	4.0																							11
12	147.21	165	28	66	98	56	4.8								28	71	103	100	9.9											12
13	159.20	177	28	66	98	56	5.3	S35C							28	80	115	100	11.1	S35C							33	3.3		13
14	171.22	190	28	75	107	56	6.3	★							28	75	107	100	11.4								33	3.9		14
15	183.25	202	33	80	117	63	7.8								33	80	117	100	13.2								33	4.5		15
16	195.29	214	33	80	117	63	8.4								33	80	117	100	14.4								33	5.1		16
17	207.35	227	33	80	117	63	9.1	(							33	80	117	100	15.7								33	5.8		17
18	219.41	239	33	80	117	63	9.9	S35C							33	89	127	100	18.0								33	6.5		18
19	231.48	251	33	80	117	63	10.7	SS41							33	89	127	100	19.4								33	7.3		19
20	243.55	263	33	89	127	63	12.1	)							33	89	127	100	21.0								33	8.1		20
21	255.63	276	33	89	127	63	13.0								33	89	127	100	22.6								33	9.0		21
22	267.72	288	33	89	127	63	13.4		43	80	130	80	13.0																	22
24	291.90	312	33	89	127	63	15.2		43	80	130	80	14.2		33	110	157	100	31.0		48	100	165	135	48.6		33	11.0	SS41	24
25	303.99	324	33	89	127	63	16.2		43	80	130	80	14.8																	25
26	316.09	337	33	89	127	63	17.2	용접	43	80	130	80	15.4															13.0		26
28	340.29	361	33	95	137	71	20.9	사양	48	85	140	100	21.0							SS41							33			28
30	364.50	385	33	95	137	71	23.2		48	85	140	100	22.5		33	110	157	100	43.9		48	100	165	135	62.5		33	18.0		30
32	388.71	410	33	95	137	71	25.7	SS41	48	85	140	100	24.0									100					33	21.0		32
35	425.04	446	33	95	137	71	29.7		48	85	140	100	26.5	FC25	33	110	157	100	56.8		48		165	135	54.2	FC25	33	25.0		35
40	489.60	507	38	103	147	80	38.2		48	85	140	100	29.1		38	125	177	140	81.3	※	53	110	180	160	81.0		33	32.0		40
45	546.99	568	38	103	147	80	47.6		53	90	140	110	36.5		38	125	177	140	98.5	※	53	110	180	160	89.8		33	41.0		45
48	582.54	604	38	103	147	80	53.0		53	90	150	110	41.0																	48
54	655.26	677	38	103	147	100	54.7	※※	53	90	150	110	52.0																	54
60	727.99	750	38	118	167	100	67.8	※※	58	100	165	120	59.0		38	125	177	160	131.6	※※	53	110	180	160	109.8		33	74.0		60
70	849.22	871	38	118	167	112	82.3	※※	58	100	165	120	72.4																	70
75	909.84	932	38	118	167	112	90.4	※※	58	100	165	120	86.0																	75

HC 140 Standard Sprocket

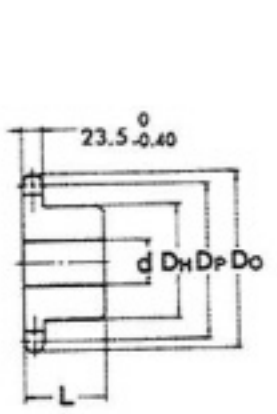

Single Strand
New B Type
(cut)

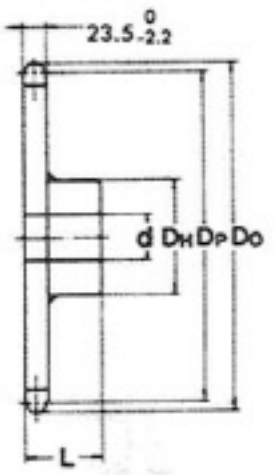

Single Strand
New B Type
(welded)

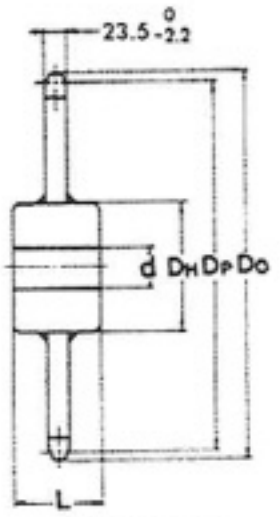

Single Strand
New C Type
(welded)

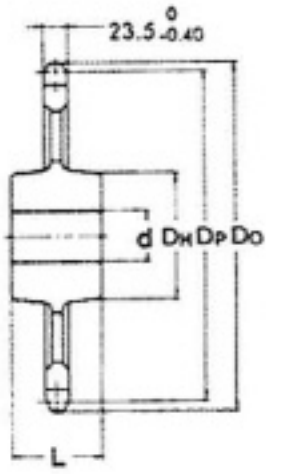

Single Strand
C Type

Numbers of Teeth	Singl Strand New B Type (cut)	Outside Dia Do	New B Type						Single Strand C Type						Numbers of Teeth
			Axis Dia d		Boss		Average Weight (kg)	Material	Axis Dia d		Boss		Average Weg-th(kg)	Material	
			Lower Hole Dia	Max	Dia	L			Lower Hole Dia	Max	Dia	d			
10	143.84	163	28	60	91	56	4.4								10
11	157.78	178	33	73	106	56	5.5	S35C							11
12	171.74	193	33	80	117	56	6.6								12
13	185.74	207	33	80	117	63	7.9								13
14	199.76	221	33	89	127	63	9.3								14
15	213.79	236	33	89	127	63	10.1	★ welded cut Teeth S35C Both SS41							15
16	227.84	250	33	89	127	63	11.0								16
17	241.91	264	33	89	127	63	12.0								17
18	255.98	279	33	89	127	63	13.0								18
19	270.06	293	33	95	137	71	15.6								19
20	284.15	307	33	95	137	71	16.7								20
21	298.24	322	33	95	137	71	17.9								21
22	312.34	336	33	95	137	71	18.4		63	105	155	115	22.9		22
24	340.54	364	33	95	137	71	20.9		63	105	155	115	24.0		24
25	354.65	379	38	103	147	80	24.1								25
26	368.77	393	38	103	147	80	25.5	★	63	105	155	115	25.4		26
30	425.24	450	38	103	147	80	31.5	welded	63	105	155	115	33.5		30
35	495.88	521	38	110	157	90	42.9		63	105	155	125	42.0	SC46	35
40	566.54	591	38	110	157	90	53.1	SS41	68	110	160	130	52.4		40
45	637.22	662	38	118	167	100	67.6	※							45
48	679.63	705	38	118	167	100	64.3	※※	68	110	160	130	65.9		48
60	849.32	875	38	118	167	112	85.6	※※	73	120	175	155	98.7		60

HC 160 Standard Sprocket

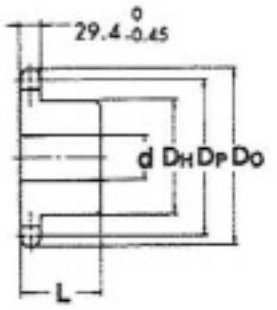

Single Strand
New B Type
(cut)

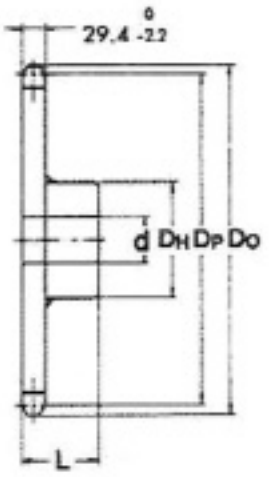

Single Strand
New B Type
(welded)

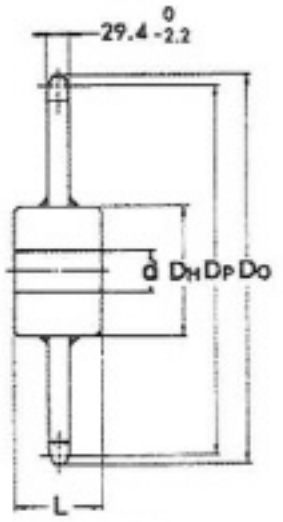

Single Strand
New C Type
(welded)

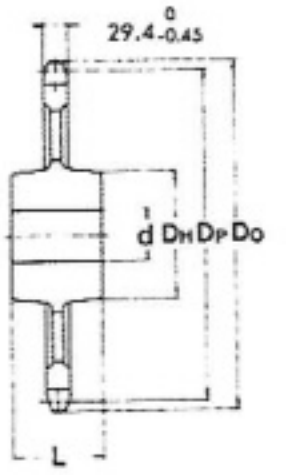

Single Strand
C Type

Numbers of Teeth	Singl Strand New B Type (cut)	Outside Dia Do	New B Type						Single Strand C Type						Numbers of Teeth
			Axis Dia d		Boss		Average Weight (kg)	Material	Axis Dia d		Boss		Average Weg-th(kg)	Material	
			Lower Hub Dia	Max	Dia	L			Lower Hub Dia	Max	Dia	d			
10	164.39	187	33	70	105	63	6.8								10
11	180.31	204	33	80	117	63	8.3	S35C							11
12	196.28	220	33	89	127	63	9.9								12
13	212.27	237	33	95	137	71	12.5								13
14	228.30	253	33	95	137	71	13.8	★							14
15	244.33	269	33	95	137	71	15.2								15
16	260.39	286	33	103	147	71	17.4								16
17	276.46	302	33	103	147	71	18.9								17
18	292.55	319	33	103	147	71	20.6	S35C							18
19	308.64	335	33	103	147	71	22.3	SS41							19
20	324.73	351	33	103	147	71	24.2								20
21	340.84	368	33	103	147	71	26.1								21
22	356.96	384	38	118	167	80	30.2		68	115	170	125	31.8		22
24	389.19	416	38	118	167	80	34.4		68	115	170	125	34.5		24
25	405.32	433	38	118	167	80	36.6								25
26	421.45	449	38	118	167	80	38.9		68	115	170	125	37.5		26
30	485.99	514	38	118	167	100	52.3	SS41							30
32	518.28	546												SC46	32
35	566.71	595	38	118	167	100	66.9		68	115	170	135	64.7		35
40	647.47	676	38	118	167	112	85.8	※	73	125	180	150	78.5		40
45	728.25	757	38	132	187	125	92.4	※※							45
48	776.72	806	38	132	187	125	100.9	※※	73	125	180	150	97.7		48
60	970.65	1000	36	132	187	125	135.4	※※	73	125	180	160	150.7		60

HC Standard Offset Links(O/L)

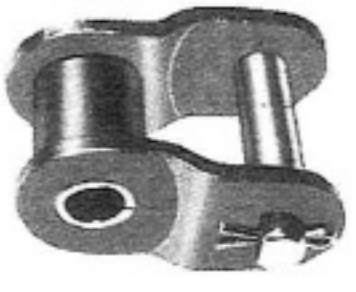

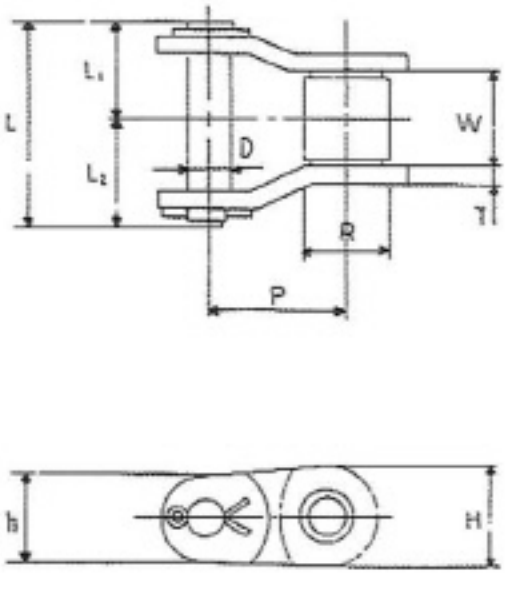

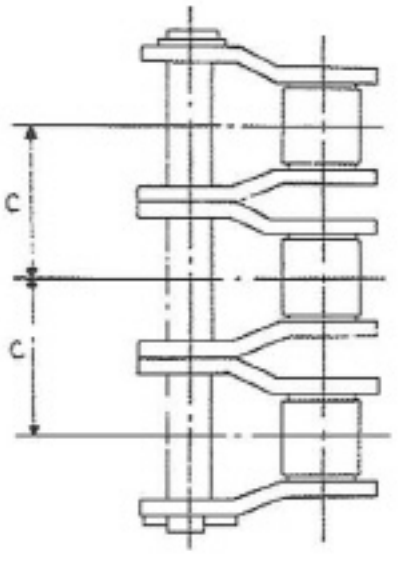

■ Dimensions

Dimension:mm

HC Chain No.	Pitch P	Roller Dia R	Inside Width W	Link Plate			Pin			Traverse Pitch C	Average Tensile Strength (kg.f)
				Thickness T	Height H	Height h	Dia d	Overall Dimensions L_1	L_2		
HC 25	6.35	3.3	3.18	0.75	5.84	5.05	2.31	3.8	4.8	6.4	460
HC 35	9.525	5.08	4.78	1.25	9.0	7.8	3.59	5.85	7.65	10.1	1,150
HC 41	12.70	7.77	6.38	1.25	9.7	8.1	3.59	6.65	9.35	—	1,160
HC 40	12.7	7.94	7.95	1.5	12.0	10.4	3.97	8.25	10.25	14.4	1,920
HC 50	15.875	10.16	9.53	2.0	15.0	13.0	5.09	10.3	12.2	18.1	3,200
HC 60	19.05	11.91	12.70	2.4	18.1	15.6	5.96	12.85	15.35	22.8	4,400
HC 80	25.4	15.88	15.88	3.2	24.1	20.8	7.94	16.25	20.35	29.3	7,500
HC 100	31.75	19.05	15.88	4.0	30.1	26.0	9.54	19.75	24.65	35.8	11,500
HC 120	38.10	22.23	25.40	4.8	36.2	31.2	11.11	24.9	30.9	45.4	15,600
HC 140	44.45	25.4	25.40	5.6	42.2	36.4	12.71	26.9	33.6	48.9	20,500
HC 160	50.80	28.58	31.75	6.4	48.2	41.6	14.29	31.85	39.15	58.5	26,300
HC 180	57.15	35.71	35.72	7.2	54.2	46.8	17.46	35.65	42.45	65.8	33,800
HC 200	63.50	39.69	38.10	8.0	60.3	52.0	19.85	39.0	48.3	71.6	43,500
HC 240	76.20	47.63	47.63	9.5	72.4	62.4	23.81	47.9	58.8	87.8	65,000

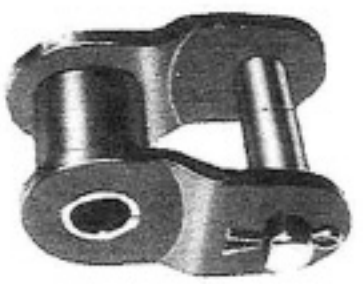

One-Pitch Offset Link

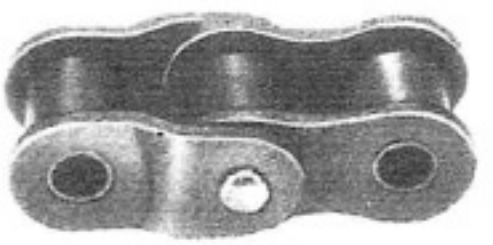

Two-Pitches Offset Link

HC BS Chains

■ Single Strand

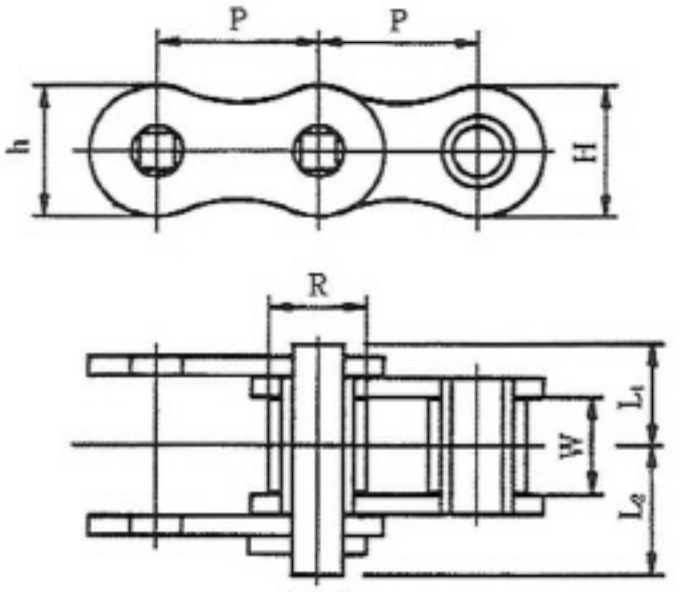

Dimension: mm

HC Chain No.	Pitch P	Inside Width W (Min)	Roller Dia R (Max)	Pin				Link Plate				Average Ultimate Strength (kg.f)	Bearing Area (cm^2)	Average Weight (kg/m)
				Dia d (Max)	Length L_1	Length L_2	Overall Dimensions L_1+L_2	T	t	H	h			
HC 06B	9.525	5.72	6.35	3.28	6.7	10.1	16.8	1.3	1.3	8.26	8.26	910	0.28	0.41
HC 08B	12.7	7.75	8.51	4.45	8.5	9.5	18.0	1.5	1.5	11.81	10.92	1.820	0.5	0.7
HC 10B	15.875	9.65	10.16	5.08	9.8	10.7	20.5	10.5	1.5	14.73	13.72	2.270	0.67	0.95
HC 12B	19.05	11.68	12.07	5.72	11.35	12.15	23.5	1.8	1.8	16.13	16.13	2.950	0.89	1.25
HC 16B	25.4	17.02	15.88	8.28	18.05	20.85	38.9	4.0	3.0	21.08	21.08	4.310	2.1	2.7
HC 20B	31.75	19.56	19.05	10.19	21.1	24.2	45.3	4.5	3.5	26.42	26.42	6.580	2.96	3.6
HC 24B	38.1	25.4	25.4	14.63	27.4	31.8	60.2	6.0	5.0	33.4	33.4	9.980	5.54	6.7
HC 28B	44.45	30.99	27.94	15.9	33.0	37.4	70.4	7.0	6.0	37.08	37.08	13.160	7.39	8.3
HC 32B	50.8	30.99	29.21	17.81	33.0	39.0	72.0	7.0	6.0	42.29	42.29	17.240	8.1	10.5
HC 40B	63.5	38.1	39.37	22.89	35.35	58.65	94.0	8.0	8.0	52.96	52.96	26.770	12.75	16.0
HC 48B	76.2	45.72	48.26	29.24	50.3	69.7	120.0	12.0	10.0	63.88	63.88	40.830	20.61	25.0
HC 56B	88.9	53.34	53.98	34.32	58.5	78.5	137.0	13.0	12.0	77.85	77.85	55.340	27.90	35.0
HC 64B	101.6	60.96	63.5	39.4	65.7	89.3	150.0	14.0	13.0	90.17	90.17	110.680	55.80	70.0
HC 72B	114.3	68.58	72.39	44.48	74.35	98.65	173.0	17.0	15.0	103.63	103.63	163.160	83.71	105.0