NO	PART NAME	SPEC. & DWG. NO.	MATERIAL	Q'TY	REMARK
1	FRAME ASS'Y	DW-SR03-01-00			
2	PIPING ASS'Y	DW-SR03-02-00		2	
3	GUARD RAIL	DW-SR03-03-00		2	
4	CENTER COVER	DW-SR03-04-01		1	
5	RIGHT COVER	DW-SR03-05-01		1	
6	PROTECTION WALL	DW-SR03-06-01		1	
7	GRATING	DW-SR03-07-01		22	
8	SWITCH ASS'Y	DW-SR03-08-00		1	
10	PUMP	1.5HP.220V.50HZ		2	
11	ALARM LAMP			1	
12	CONTROL PANEL			1	
13	RAMPS	DW-SR03-09-01		4	

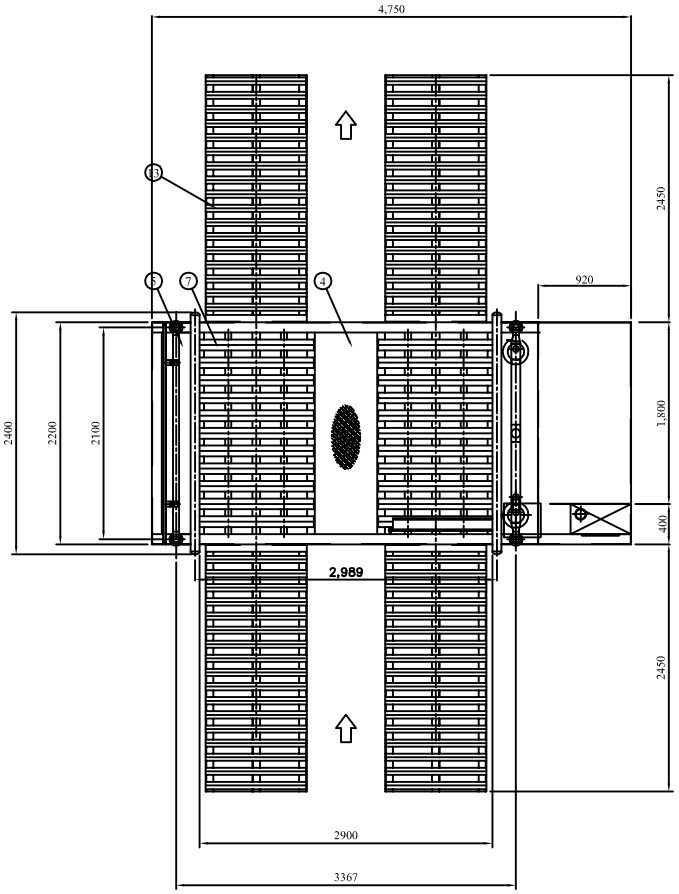

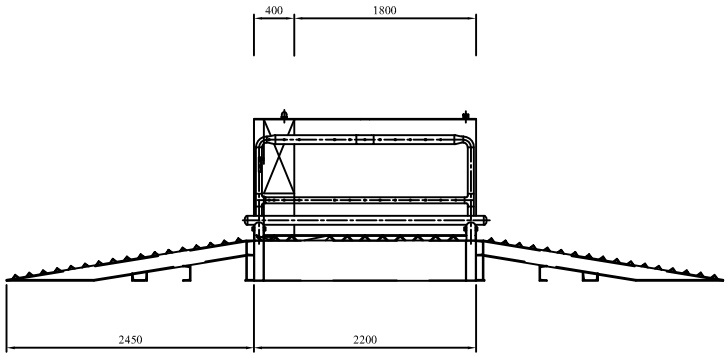

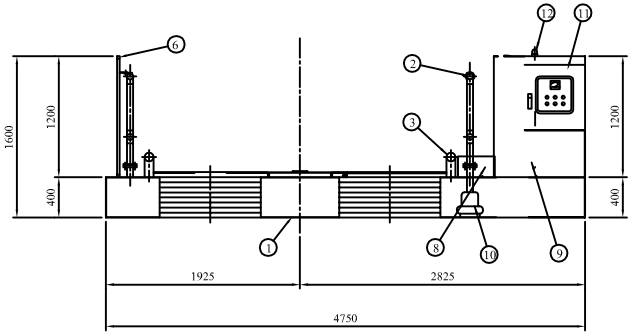

SPECIFICATION			
SIZE	W 2200 x L 4750 x H 400		
CAPACITY	WIDTH OF TRUCK MAX. 2900 mm		
	GENERATOR		SPEED (m/min)
GENERATOR	10.5KW x 220V X 50HZ		–
PUMP	1.5HP X 220V	Q : 1.0m /min. H : 35m	
SENSOR	MECHANICAL SENSOR		
MAIN POWER(	SELF GENERATOR		

No.	DESCRIPTION	MATERIAL	Q'TY	DIMENSION	REMARK
1					
2					
3					

APP(승인)	CHK(검토)	DRAWN(제도)	DATE(날짜)	제작사	사업명	공사명	도면명 DWG.TITLE
	D.I LEE	G.S CHOI	2011 7.22	DONGWOO CORPORATION DONGWOO	DW- SPG03 ASS,Y (WITH RAMPS)		LAY OUT
						DWG No. 2011. 7	SHEET No.