CG/CA-Series Control Valves

Cage Balanced Globe & Angle Valves

Drilled Multi-Hole Velocity Control Trim Application

Introduction

BFS's CG/CA-series is designed to be used for compressible and non-compressible fluid service applications in valve size ranging from 2" through 26" in pressure classes 150Lbs to 4500Lbs.

The CG/CA-series valves are supplied with either direct or reverse acting actuators plus a number of optional accessories to satisfy most final control element requirements. Our CG/CA-series valves also permit interchangeability of actuators and trims within certain valve sizes for simplifying control changes in the field. This feature combined with a wide selection of standard and optional trim assemblies provides optimum control and has proven to be economical should field conversion be necessary.

Contents

Model Numbering System

1

Body series	Trim Design	Trim Type	Body Rating	Actuator Type
CG / Cage Globe	G2 / Balanced	C1-Conventional Cage	01-150 / 10K	DR-Diaphragm/Rever.
CA / Cage Angle	G3 / Aux. Pilot Plug	M1-Multi-hole 1-stage	02-300 / 20K	DD-Diaphragm/Direct
		M2-Multi-hole 2-stage	03-600 / 40K	CS-Spring Cylinder
		M3-Multi-hole 3-stage	04-900 / 62K	CD-Double Cylinder
		XT-X[iks]-trim	05-1500	EM-Electric Motor
		MS-Multi-step	06-2500	HS-Hydraulic Cylinder
			07-4500	MH-Manual Handle
				XX-Others

1. CG/CA-series, Valve Specification

- **Body Style**
  ; High Capacity Globe, Angle & Y-Globe,
- **Body Size :** 2" to 26" / Over 26"(option)
- **Pressure Rating :** ANSI 150 to 4500
  KS(JIS) 10K, 20K,40K, 62K
  DIN (Option)
- **End Connections :** FF, RF, RTJ, BW, SW, SCRD, Etc..
- **Bonnet :** Bolted type, Pressure Seal type.
  ; Standard type.
  ; Extension type.
  ; Bellows seal type.
  ; Long Extended type / Cryogenic Service.
- **Flow Direction**
  ; Flow to open / Compressible Gas & Steam
  ; Flow to Close / Liquid, Water
- **Trim Design** : Balanced
- **Trim Form**
  ; Conventional Cage Trim
  ; MH1S / Multi-Hole 1-Stage Trim
  ; MH2S / Multi-Hole 2-Stage Trim
  ; MHMS / Multi-Hole Multi-Stage Trim
  ; G3/APT / Auxiliary-Pilot-Plug Trim
- **Characteristics :** Linear, EQ-%, Modfied-%.
- **Rangeability :** 30:1, 50:1, 80:1, 100:1. / Option 800:1.
- **Seat Leakage**
  ; Standard -FCI 70-2. Class IV
  ; Option - FCI 70-2. Class V. VI.
  ; MSS-SP-61
- **Materials of Body & Bonnet**
  ; A216-WCB, A217-WC6, A217-WC9, A217-C12A, A105, A182-F11,F22, F91, F92, Inconel.
  ; A351-CF8,8M, CF3,3M, Monel, Duplex, Al-Bronze, Alloy Hastelloy, Titanium, Tantalum,
- **Materials of Trim**
  ; 316 SS, 410 SS, 416 SS, 420 SS, 420J2, 431 SS, 630 SS,
  ; 17-4PH, A182-F11/F22+Stellite overlay.
  ; Inconel, Others Special Materials
- **Actuators**
  ; Spring Diaphragm
  ; Double Cylinder & Spring Cylinder
  ; Electric Motor
  ; Hydraulic Cylinder
  ; Self Contained Electro-Hydraulic Cylinder
  ; Gas-Over-Oil Hydraulic Cylinder
- **Hand-wheel / Option.**
  ; Worm Gear Box / Side mounted or Top Mounted
  ; Hydraulic Hand Jack.

2. Inherent Flow Characteristics

It is the relationship between valve capacity and valve travel and is usually expressed graphically. It is derived from testing a valve with water as the fluid and with a constant pressure drop across the valve. The most common types of inherent flow characteristics are linear, equal percentage, modified percentage, and quick opening

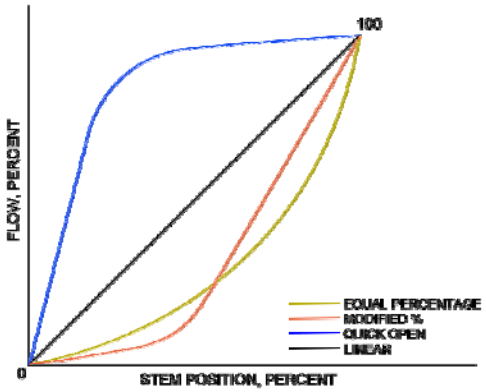

Characteristic Curve

3. Feature of CG/CA-series

BFS's CG/CA-series globe control valves are engineered to handle the most demanding process conditions and exceed the capabilities of comparable designs. The balanced cage-guided construction of the CG/CA series provides some key advantages versus typical unbalanced single contoured plug type design.

The CG/CA-series cage guided control valves feature pressure balanced plug designs.
Tight shutoff is available with the balanced plug and appropriate seat ring materials.

Drilled Hole Multi-Hole Velocity Control trim

Versatile Trim Solution

Various noise attenuation, anti-cavitation, and tight shutoff solutions are available with the standard multi-hole pressure reduction device product envelope. This includes the following trim options:

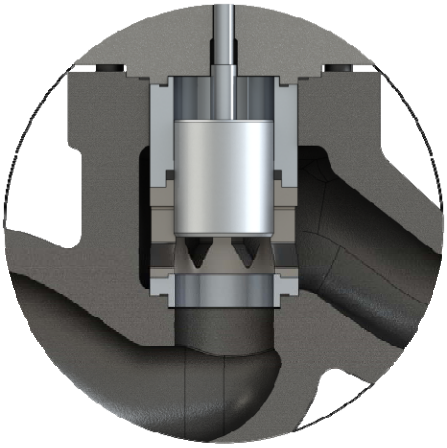

Conventional Cage Balanced Trim

3-1. Conventional Cage :

General propose cage guided valve trim which can be used in most clean compressible and non-compressible fluid service for both modulating and on/off control. The balanced plug design reduces actuator force requirements thus permitting use of smaller, less expensive actuators while maintaining tight shutoff capability.

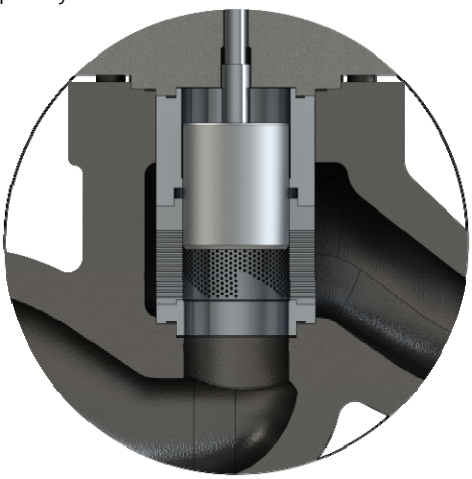

MH1S-trim / Multi-Hole 1-Stage trim

3-2. **MH1S trim** (Multi-Hole 1-Stage) :

Provides excellent low noise performance on either gas or steam applications. Also provides an effective anti-cavitation solution for liquid service.

This trim offers some of advantages of the multiple hole trim. Single stage trim reduces the damaging effects of flashing and cavitation when used with compressible and non-compressible fluids. Turn-down-ratio, seat leakage, dBA levels, flashing and cavitation reduction are based upon the individual design criteria of each trim. The single stage trim can be used in place of other port throttling trim styles, size available 2" through 26" with balanced and unbalanced plugs. (Option / over 26")

3-3. MH2S, (Multi-Hole 2-Stage}

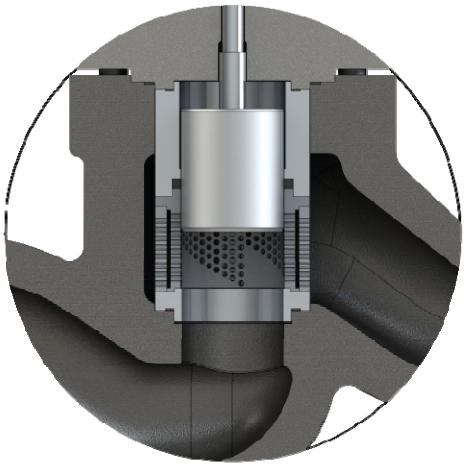

MH2S-trim / Multi-Hole 2-Stage trim

3-4. MHMS Trim (Multi-Hole Multi-Stage)

Provides highly effective low noise and anti-cavitation solutions for high-pressure ratio applications.

BFS multi-hole multi-stage(MHMS) trim assembly in unbalanced or balanced single seat designs provides multiple pressure breakdowns for noise abatement in critical pressure drop steam or gas applications. This trim is also equally effective in high pressure drop liquid applications for preventing cavitation and trim erosion damage.

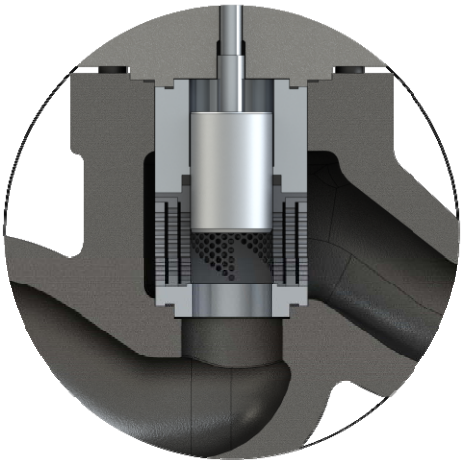

MHMS-trim / Multi-Hole Multi-Stage trim

3-5. Pilot Balanced Trim :

Provides unmatched tight shut-off performance for high temperature application.

The G3(Auxiliary-Pilot-Plug-trim/APT-trim)trim is designed primarily for high pressure differential applications where tight shutoff is essential. Such applications include steam and water pressure reduction, steam throttling to atmosphere or to condenser, isolation, super-critical-boiler start-up and variety of other use in steam and water control system. The design of the G3(APT-trim) provides tight shutoff, excellent control and rangeability, but requires low actuator thrust which provides rapid response. It is also lower in cost. The trim is basically a port throttling single seat design with main and pilot plugs working in G3(APT-trim). The large main plug is the control device. Inside the main plug is the pilot plug connected rigidly to the valve stem. When closing the main plug seats first as a large balanced plug, it is rapidly followed by the closing of the pilot plug.

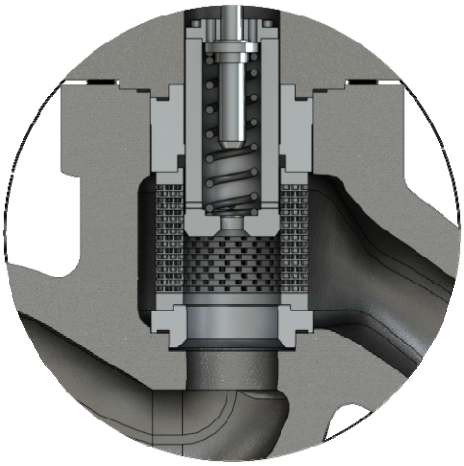

G3(APT)-trim / Auxiliary-Pilot-Plug trim

At this point, the plug from an unbalanced assembly and up stream pressure helps create high seating force resulting in reliable shutoff as high as class V. To open the valve, the need is only to lift the small pilot plug to cause the main plug to once again become balanced.

3-5. Internal Diffuser :

Provides additional low noise and anti-cavitation benefits in flow-to-close applications. For condensate water control valves application, when the condensate is drained and looses just a small amount of pressure, it flashes and erosion damage to the control valve and associated piping is common

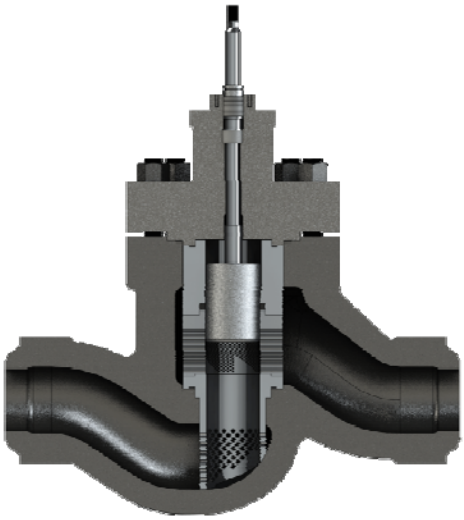

Integral Seat-Ring with Diffuser Globe Valve for Heater Drain Control Valve

Engineered trim options are also available for high temperature and high pressure drop applications, including Multi-Stage Anti-cavitation Trim. Please consult factory for details.

The important thing in choosing control valves in this application is to use a characterized disk stack to range low flow away from the seat, with sufficient turns to keep velocity as low as possible.

Angle valves or globe valves with oversized ends and a flow distributer integral with the seat-ring to limit velocity will also combat erosion.

3-7. Velocity & Pressure : The velocities at the inlet and outlet of a BFS control valve with MHMS-trim are generally designed for maximum of a 30feet/sec, while fluid velocities interior to the valve are also closely controlled. In addition, the valve is designed to ensure that the pressure of the fluid in the valve body is always greater than the liquid vapor pressure.

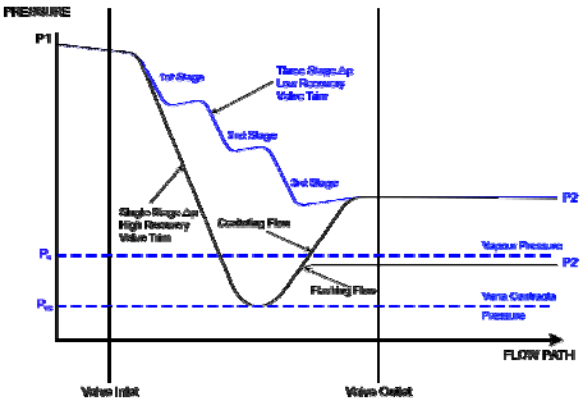

MHMS trim Application Velocity Profile

3-6. NACE Compliance : The CG/CA series is available for sour service applications using design and construction methods in accordance with NACE Standard MR0175.

- Materials and processes in accordance with the requirements of NACE specification MR0175.
- Materials designated for these parts conform to NACE Class Ⅲ bolting requirements.
- Materials designated for these parts conform to NACE Class Ⅰ or Class Ⅱ bolting requirements.
- Cage gasket only required for valve sizes 6" to 16" for application ≤232℃.
- Balance Sealing materials for CG/CA-series (PTFE-Balance-seal) will be replaced with Glass-Reinforced PTFE External Seal Ring and Viton Internal Seal Ring.
- Maximum temperature for CG/CA-series limited 232℃

4. Types of Bonnet

4-1. Cold Box Extension Bonnet for Cryogenic Service

The cold box extended bonnet permits stagnated, moderate temperature gas to form in the bonnet, which protects the packing from the service fluid. Typically manufactured from 304SS or 316SS, it handles temperatures down to -253℃. Standard construction consists of stainless steel bonnet flange and bolting.

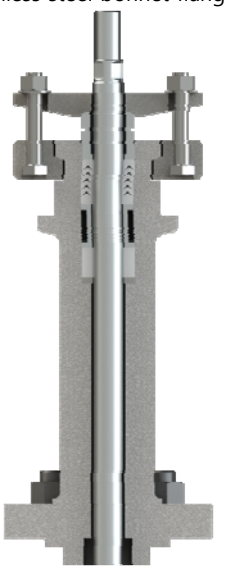

Cold Box Extension Bonnet

4-2. Welded Metal Bellows Seal Bonnet

Provides for a positive metallic gland seal within the rated pressure and temperature of the bellows material selected. Uses on hazardous, lethal service as a back up seal in the unlikely event of bellows failure. The standard welded metal bellows seal is rated for operation in processes ranging in temperature -196℃ to 593℃ and pressure to 76barG. / ANSI 1500-Option.

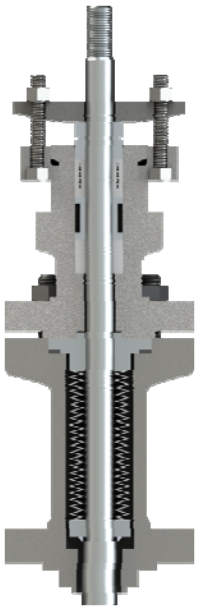

Bellows Seal Bonnet

4-3. Standard Bonnet

The Globe & Angle Valve bonnet is usually constructed of the same material as the body and handles temperatures from -30℃ to 400℃

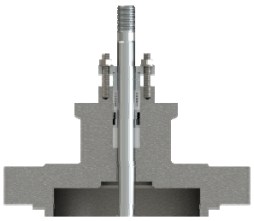

Standard Bonnet

4-4. Extension Bonnet

The extended bonnet protects the packing from excessive heat or cold, which may inhibit valve performance. The bonnet is constructed of carbon steel for temperatures from -30℃ to 427℃ and Stainless Steel or Alloy Steel for -100℃ to 816℃.

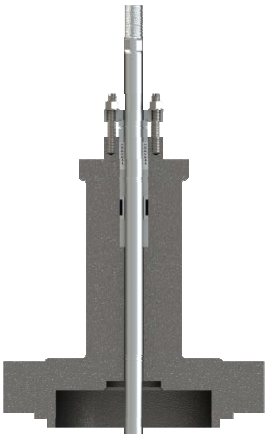

Extension Bonnet

5. Packing and Guiding

5-1. Packing Box

Standard BFS packing boxes are deeper than most conventional types, providing the following advantages:

5-1-1. The spacing between the wiper set and the main upper packing set prevents contamination of the upper packing. The upper set is positioned far enough away from the wiper set to avoid contact with any part of the plug stem that has been exposed to the following medium. The wiper set is designed to minimize the amount of fluid on the plug stem.

5-1-2. Bonnets are designed to permit a wide variety of packing configurations, including a double set of packing, without changing bonnets.

5-1-3. Two widely spaced stem guides, when used with the CG/CA-series large plug stem diameter, provide exceptional guiding. The upper stem guide also acts as a packing follower; the lower guide is situated close to the plug head for additional guiding support, ensuring accurate alignment of plug and seat ring.

5-1-4. Solid hard graphite guides provide superior guiding over wide temperature ranges and completely eliminate guide/stem galling. A variety of guides are available for various applications, including solid brass, Glass-filled PTFE.

1. Teflon V-Packing *2. Molded Graphite Packing*
3. Teflon Low Emission V-Packing
4. Double Teflon V-Packing (Vacuum & Pressure service)
5. Molded Double Graphite Packing

5-2. Live Loading Packing System

High Temperature Protection

Belleville springs are used when the valve itself is subjected to temperature sufficiently high to expand the stem. This stem expansion, when restrained, can damage the seat or plug, bend the stem or damage the actuator thrust bearings. Belleville springs allow the drive sleeve to move with the thermal expansion and relieve the linear

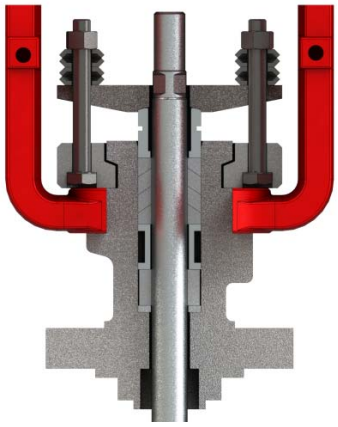

Live Loading Packing System

force. Belleville washers are also used in valve packing to provide a constant load. Shows Belleville springs for constant packing load. They feature a high spring constant and compactness thus enabling a constant packing load. They also show that the necessary spring rate is achieved by stacking washers in series or parallel.

6. Flow Direction

- Flow to Open (FTO)
  ; Compressible fluid / Steam Air, Gas. Etc...
- Flow to Close (FTC)
  ; Non-compressible fluid / Liquid, Water.
  ; Aux. Pilot Plug Application
  ; Internal Diffuser Application.

7. Options

-Environmental Capabilities / Live Loading Packing...
- Other Flange Facings
- Limit Stops
- Body Drain Plug
- Reducer and Nipple Connections
- NACE Compliance
- Custom Trim Materials / U.O.P Materials.
- Other Materials.
- Soft Seat (IEC 534-4 and ANSI Class VI)

-Non-Destructive Examination
- Oxygen Cleaning
- Oil-free Cleaning
- Hydraulic Actuator and Electric Actuator.
- Self-Contained-Electro-Hydraulic Actuator
- Gas-Over-Oil /Gas-Hydraulic Actuator
- For Accessories and additional option, consult BFS.

Standard Material Application of CG/CA-series

Fluid Temperature / ℃		-196 -45 -29 0 +270 +425 +450 +480 +566 +610 +710
Ref. No	**Parts Name**	**Application Materials**
1	Body	A216-WCB / A105
		A217-WC6,WC9, C12a / A182-F11, F22, F91, F92 / F91 / F92
		A351-CF8, A351-CF8M, A351-CF3, A351-CF3M, 304 SS,316 SS, 304L SS, 316L SS.
2	Bonnet	A216-WCB / A105
		A217-WC6,WC9, C12a / A182-F11, F22, F91, F92 / F91 / F92
		A351-CF8, A351-CF8M, A351-CF3, A351-CF3M, 304 SS,316 SS, 304L SS, 316L SS.
3	Body Studs	SNB7 / SNB16
		Alloy Steel ASTM A193 Gr. B7
		304 SS
4	Body Stud Nuts	S45 C / ASTM A194 Gr. 4
		Alloy Steel ASTM A194 Gr. 2H
		304 SS
5	Plug	316 SS or 316 SS + Stellited.
		410 SS / Alloy Steel + Stellited / Inconel
6	Pilot Plug	400 Series Stainless Steel / 17-4PH (630SS) / Inconel
		316 SS or 316 SS + Stellited.
7	Pilot Spring	17-4PH/630 SS / Inconel
		17-4PH/630 SS
8	Retaining Ring	Inconel 718
9	Cage / Guide	316 SS or 316 SS + Stellited
		410 SS / Alloy Steel + Stellited / Inconel
10	Seat Ring	316 SS or 316 SS + Stellited
		410 SS / Alloy Steel + Stellited / Inconel
11	Plug Stem	316 SS
		17-4PH/630SS
		310 SS, Inconel, A286 Super Alloy. ASTM A638 Gr. 660
12	Guide Bushing	440C SS / ASTM A276 TY 440C
		Standard with Stainless Steel Body Materials / Stellited.
13	Balance Seal	RTFE+316SS
		Graphite+Inconel
		Carbon-Ring / Metal-Ring
14	Body Gasket	316 SS Teflon Filler / Spiral Wound
		316 SS with Flexible Graphite Filler / Spiral Wound
15	Packing	Braided Teflone or V-Teflone.
		Molded Graphite, Flexible Graphite
16	Packing Studs	304 SS
17	Packing Studs Nuts	304 SS
18	Packing Follower	304 SS
19	Packing Spacer	316 SS
20	Packing Flange	A351-CF8 or 304 SS

* Body Materials Application : A216-WCB, A217-WC6, A217-WC9, A217-C12a, A105, A182-F11, A182-F22, A182-F91, A182-F92, A351-CF8, A351-CF8M, A351-CF3, A351-CF3M, Monel, Hastelloy-C/B, Duplex, Titanium, Inconel, Al-Bronze, Aluminium, Others.

* Trim Materials Application : 304 SS, 316 SS, 316 SS+Stellited, 410 SS, 416 SS, 420 SS, 630 SS (17-4PH) , A182-F11/22/F91 + Stellited, Inconel, Hastelloy, Titanium, Duplex, Monel, Others.

Body Assembly Construction

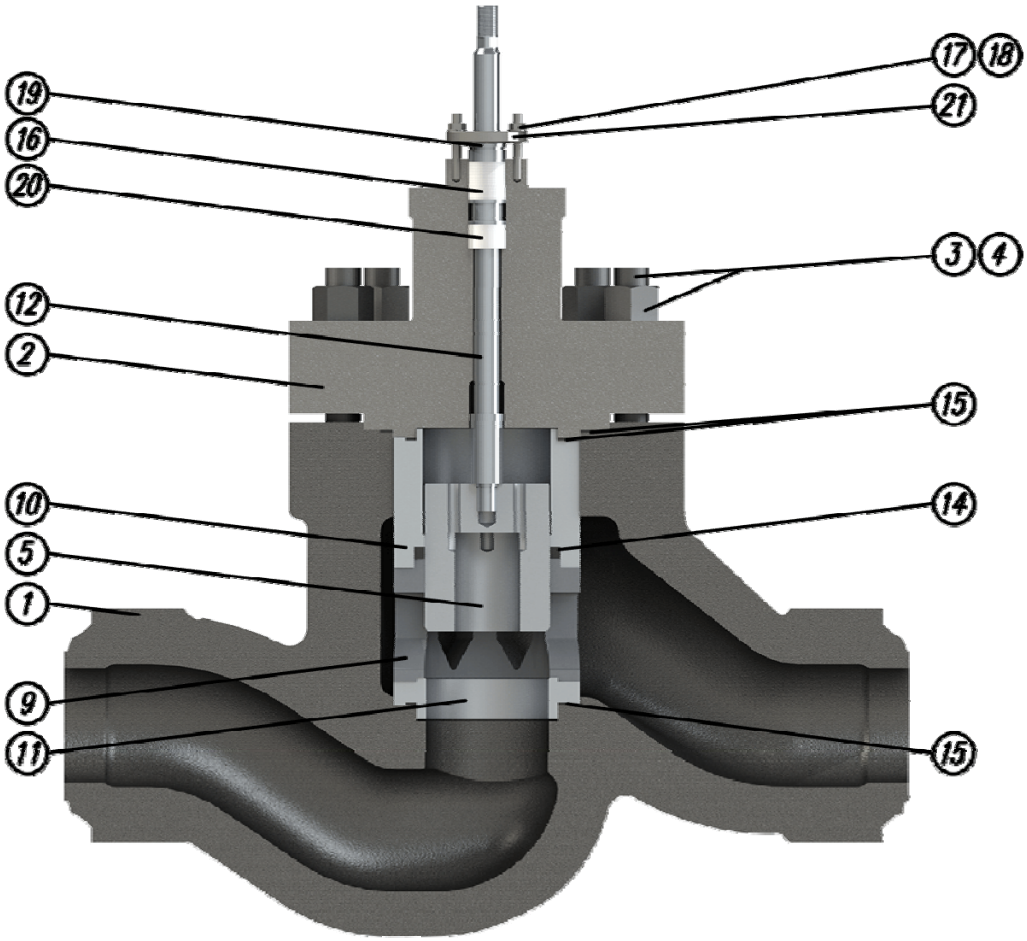

Cage Balanced Plug Trim Construction / CG-Series

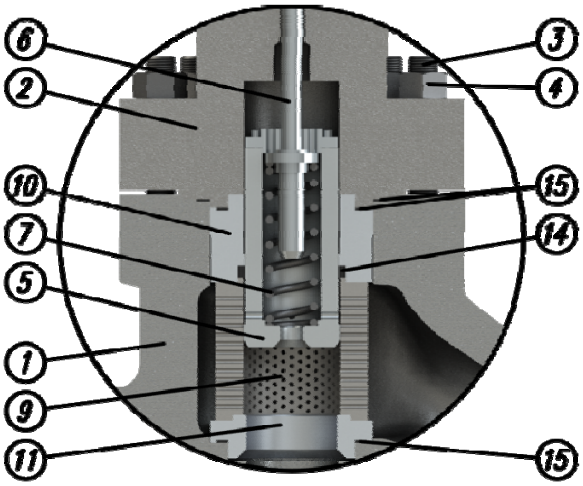

Aux. pilot Plug Trim Construction

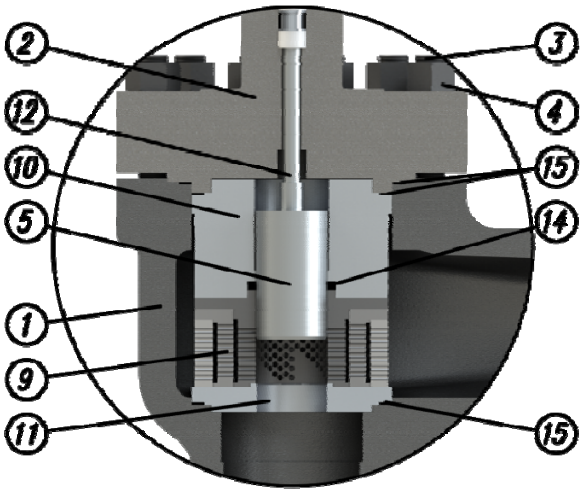

Angle Body Construction / CA-Series

Cv Characteristic Chart

Conventional Cage / Linear *Linear*

Percent of Plug Travel (%)			10	20	30	40	50	60	70	80	90	100
Valve Size	**Orifice Diameter**	**Treavel**	***Rated Cv***									
FL		**(mm)**	0.94	0.94	0.93	0.93	0.92	0.92	0.91	0.91	0.90	0.90
1-1/2"(40A)	1.58"	20/30	4.55	7.93	11.32	14.7	18.08	21.47	24.85	28.23	31.62	35
2" (50A)	1.97"	30	6.11	10.65	15.2	19.74	24.48	28.83	33.37	37.91	42.46	47
2-1/2"(65A)	2.5"	30/40	9.49	16.55	23.6	30.66	37.72	44.77	51.83	58.89	65.94	73
3" (80A)	2"	30/40	7.15	12.47	17.78	23.1	28.42	33.73	39.05	44.47	49.68	55
	3.15"		13.65	23.8	33.95	44.1	54.25	64.4	74.55	84.7	94.85	105
4" (100A)	3.15"	40/50	14.3	24.93	35.57	46.2	56.83	67.47	78.1	88.73	99.37	110
	3.94"		24.7	43.07	61.43	79.8	98.17	116.53	134.9	153.27	171.63	190
6" (150A)	3.94"	40/50	26	45.3	64.7	84	103.3	122.7	142	161.3	180.7	200
	5.98"	50/70	52	98.7	129.3	168	206.7	245.3	284	322.7	361.3	400
8" (200A)	7.8"	70	70.2	122.4	174.6	226.8	279	331.2	383.4	435.6	487.8	540
		100	87.1	151.9	216.6	281.4	346.2	410.9	475.7	540.5	605.2	670
10" (250A)	9.88"	70	109.2	190.4	271.6	352.8	434	515.2	596.4	677.6	758.8	840
		100	135.2	235.7	336.3	436.8	537.3	637.9	738.4	838.9	939.5	1040
12" (300A)	11.65"	70	136.5	238	339.5	441	542.5	644	745.5	847	948.5	1050
		100	188.5	328.7	458.8	609	749.2	889.3	1029.5	1169.7	1309.8	1450
14"(350A)	13.60"	100	195	340	485	630	775	920	1065	1210	1355	1500
		130	257.4	448.8	640.2	831.6	1023	1214.4	1405.8	1597.2	1788.6	1980
16"(400A)	15.6"	100	266.5	464.7	662.8	861	1059.2	1257.3	1455.5	1653.7	1851.8	2050
		130	338	589.3	840.7	1092	1343.3	1594.7	1846	2097.3	2348.7	2600

**** Over 16" Cv Characteristic : Please contact BFS Sales Rep.***

Cv Characteristic Chart

Conventional Cage / Equal Percentage *Equal Percentage*

Percent of Plug Travel (%)			10	20	30	40	50	60	70	80	90	100
Valve Size	**Orifice Diameter**	**Treavel**	***Rated Cv***									
FL		**(mm)**	0.94	0.94	0.93	0.93	0.92	0.92	0.91	0.91	0.90	0.90
1-1/2"(40A)	1.58"	20/30	1.64	2.3	3.24	4.55	6.39	8.98	12.62	17.73	24.91	35
2" (50A)	1.97"	30	2.2	3.09	4.35	6.11	8.58	12.06	16.94	23.81	33.45	47
2-1/2"(65A)	2.5"	30/40	3.28	4.61	6.47	9.09	12.78	17.96	25.23	35.45	49.82	70
3" (80A)	2"	30/40	3.33	4.67	6.56	9.23	12.96	18.21	25.93	35.96	50.53	71
	3.15"		4.92	6.91	9.71	13.64	19.17	26.94	37.85	53.18	74.73	105
4" (100A)	3.15"	40/50	5.15	7.24	10.17	14.29	20.08	28.22	39.65	55.71	78.28	110
	3.94"		8.9	12.5	17.57	24.69	34.69	48.74	68.49	96.23	135.22	190
6" (150A)	3.94"	40/50	9.2	12.9	18.1	25.5	35.8	50.3	70.7	99.3	139.5	190
	5.98"	50/70	18.7	26.3	37	52	70.6	102.6	144.2	202.6	284.7	400
8" (200A)	7.8"	70	24.4	34.2	48.1	67.6	94.9	133.4	187.4	263.4	370.1	520
		100	30.4	42.8	60.1	84.5	118.7	166.8	234.3	329.2	462.6	650
10" (250A)	9.88"	70	39.3	55.3	77.7	109.1	153.4	215.5	302.8	425.5	597.8	840
		100	48.7	68.4	96.2	135.1	189.9	266.8	374.9	526.8	740.2	1040
12" (300A)	11.65"	70	47.8	67.1	94.3	132.5	186.2	261.7	367.7	516.6	725.9	1020
		100	66.5	93.5	131.3	184.5	259.3	364.3	511.9	719.2	1010.6	1420
14"(350A)	13.60"	100	67.9	95.4	134.1	188.4	264.7	372	522.7	734.4	1031.9	1450
		130	92.7	130.3	183.1	257.3	361.5	507.9	713.7	1002.9	1409.1	1980
16"(400A)	15.6"	100	89	125	175.7	246.9	346.9	487.4	684.9	962.3	1352.2	1900
		130	118	165.8	233	327.4	460.1	646.5	908.4	1276.4	1793.4	2520

**** Over 16" Cv Characteristic : Please contact BFS Sales Rep.***

Cv Characteristic Chart

MH1S / Multi-Hole 1-Stage *Linear*

Percent of Plug Travel (%)			10	20	30	40	50	60	70	80	90	100
Valve Size	Orifice Diameter	Treavel	*Rated Cv*									
FL		(mm)	0.94	0.94	0.93	0.93	0.92	0.92	0.91	0.91	0.90	0.90
1-1/2"(40A)	1"	20/30	1.3	2.6	3.9	5.2	6.5	7.8	9.1	10.4	11.7	13
2" (50A)	1.6"	30	3	6	9	12	15	18	21	24	27	30
2-1/2"(65A)	2.2"	30/40	4	9	13	17	22	26	30	34	39	43
3" (80A)	2.5"	40	6	12	17	23	29	35	41	46	52	58
		50	7	14	22	29	36	43	50	58	65	72
4" (100A)	3.15"	40	9	17	26	34	43	51	60	68	77	85
	3.6"	50	11	22	33	44	55	66	77	88	99	110
6" (150A)	4"	50	13	26	39	52	65	78	91	104	117	130
	5"	70	23	46	69	92	115	138	161	184	207	230
8" (200A)	6.5"	70	29	58	87	116	145	174	203	232	261	290
		100	38	76	114	152	190	228	266	304	342	380
10" (250A)	8"	70	39	78	117	156	195	234	273	312	351	390
		100	65	130	195	260	325	390	455	520	585	650
12" (300A)	10"	70	63	126	189	252	315	378	441	504	567	630
		100	84	168	252	336	420	504	588	672	756	840
14"(350A)	12"	100	86	182	278	374	470	566	662	758	854	950
		130	110	220	330	440	550	660	770	880	990	1100
16"(400A)	13"	130	136	272	408	544	680	816	952	1088	1224	1360
		150	180	360	540	720	900	1080	1260	1440	1620	1800

** Over 16" Cv Characteristic : Please contact BFS Sales Rep.*

Cv Characteristic Chart

MH2S / Multi-Hole 2-Stage *Linear*

Percent of Plug Travel (%)			10	20	30	40	50	60	70	80	90	100
Valve Size	Orifice Diameter	Treavel	*Rated Cv*									
FL		(mm)	0.96	0.96	0.96	0.96	0.96	0.96	0.96	0.96	0.96	0.96
1-1/2"(40A)	0.8"	20/30	1.2	2.4	3.6	4.8	6	7.2	8.4	9.6	10.8	12
2" (50A)	1.4"	30	1.9	3.8	5.7	7.6	9.5	11.4	13.3	15.2	17.1	19
2-1/2"(65A)	1.7"	30/40	2.4	4.8	7.2	9.6	12	14.4	16.8	19.2	21.6	24
3" (80A)	2.1"	40	3	6	9	12	15	18	21	24	27	30
		50	4	9	13	17	22	26	30	34	39	43
4" (100A)	2.3"	40	6.1	10.7	15.2	19.7	24.3	28.8	33.4	37.9	42.5	47
	2.8"	50	7	14	22	29	36	43	50	58	65	72
6" (150A)	3.2"	50	8	15	23	30	38	45	53	60	68	75
	4"	70	13	26	39	52	65	78	91	104	117	130
8" (200A)	4"	70	16	31	47	62	78	93	109	124	140	155
	4.5"	100	19	38	57	76	95	114	133	152	171	190
10" (250A)	5"	70	25	50	75	100	125	150	175	200	225	250
	6"	100	35	70	105	140	175	210	245	280	315	350
12" (300A)	7"	70	38	75	113	150	188	225	263	300	338	375
	8"	100	42	84	126	168	210	252	294	336	378	420
14"(350A)	8.5"	100	50	100	150	200	250	300	350	400	450	500
	10"	130	60	120	180	240	300	360	420	480	540	600
16"(400A)	10"	130	80	160	240	320	400	480	560	640	720	800
	12.5"	150	111	221	332	442	553	663	774	884	995	1105

** Over 16" Cv Characteristic : Please contact BFS Sales Rep.*

Body Dimension
CG-series
Cage Balanced Globe Body Valves

unit/mm

Valve Size	ANSI Class	A			B	H	
		RF Flange	RTJ Flange	Welding		Standard	Extension
40A(1.5")	150	222	235	251	63	145	245
	300	235	248	251	78	145	245
	600	251	251	251	78	145	245
	900	333	333	330	80	187	287
	1500	333	333	330	80	187	287
	2500	381	384	359	103	250	350
50A(2")	150	254	267	286	75	156	256
	300	267	283	286	83	156	256
	600	286	289	286	83	156	256
	900	375	378	375	108	248	348
	1500	375	378	375	108	248	348
	2500	400	403	400	118	279	379
65A(2.5")	150	276	289	311	90	195	295
	300	292	308	311	95	195	295
	600	311	314	311	95	195	295
	900	410	413	375	123	248	348
	1500	410	413	375	123	248	348
	2500	441	447	400	133	279	379
80A(3")	150	298	311	337	95	204	304
	300	318	334	337	105	204	304
	600	337	340	337	105	210	310
	900	441	444	460	120	280	380
	1500	460	463	460	133	280	380
	2500	660	666	498	153	345	445
100A(4")	150	352	365	394	115	235	335
	300	368	384	394	128	235	335
	600	394	397	394	138	243	343
	900	511	514	530	145	339	439
	1500	530	533	530	155	339	439
	2500	737	747	575	178	399	499
150A(6")	150	451	464	508	140	320	420
	300	473	489	508	160	320	420
	600	508	511	508	178	328	429
	900	714	717	768	190	425	570
	1500	768	774	768	198	425	570
	2500	864	877	819	243	500	620
200A(8")	150	543	556	610	173	383	510
	300	568	584	610	190	383	510
	600	610	613	610	210	388	515
	900	914	917	832	235	425	675
	1500	972	982	832	243	425	675
	2500	1022	1038	1029	275	620	740
250A(10")	150	673	686	752	221	392	515
	300	708	724	752	223	392	515
	600	752	755	752	255	425	540
	900	991	994	991	273	600	845
	1500	1067	1073	991	293	600	845
	2500	1372	1385	1270	338	747	867
300A(12")	150	737	750	819	268	448	648
	300	775	791	819	268	448	648
	600	819	822	819	280	485	685
	900	1130	1133	1130	305	680	880
	1500	1219	1229	1130	338	680	880
	2500	1575	1597	1422	380	875	1075
350A(14")	150	889	902	1029	367	518	718
	300	927	943	1029	367	518	718
	600	972	975	1029	367	555	755
	900	1257	1260	1257	320	765	995
	1500	1257	1273	1257	375	765	995
400A(16")	150	1016	1029	1108	377	560	817
	300	1057	1073	1108	377	560	817
	600	1108	1111	1108	377	595	852
	900	1422	1432	1422	353	855	1105
	1500	1422	1441	1422	413	855	1105

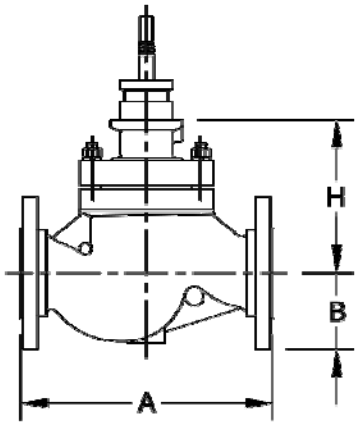

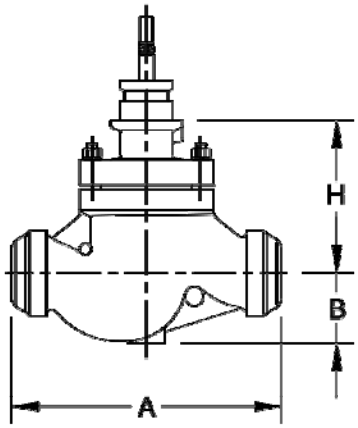

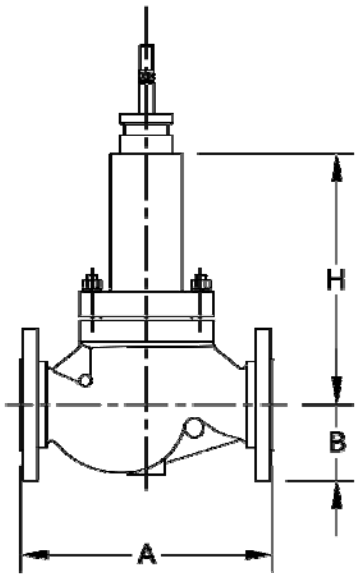

1. Flanged End Face-to-Face dimensions are per ISA-75.08.01-2002 and 78.08.06-2002

2. Buttweld End to End dimensions are per ISA-75.08.05-2002

3. Other size and Pressure rating grade valves : Please contact BFS Sales Rep.

4. All dimensions are for reference only. Please consult the factory for certified dimensions.

Body Dimension
CA-series
Cage Balanced Angle Body Valves

unit/mm

Valve Size	ANSI Class	A			a	H	
		RF Flange	RTJ Flange	Welding		Standard	Extension
25A(1")	150	92	99	105	*	124	224
	300	99	105	105	*	124	224
	600	105	105	105	*	124	224
	900	146	146	140	*	190	290
	1500	146	146	140	*	190	290
	2500	159	159	159	*	230	330
40A(1.5")	150	111	118	126	*	145	245
	300	118	124	126	*	145	245
	600	126	126	126	*	145	245
	900	167	167	165	*	187	287
	1500	167	167	165	*	187	287
	2500	191	192	180	*	250	350
50A(2")	150	127	134	143	*	156	256
	300	134	142	143	*	156	256
	600	143	145	143	*	156	256
	900	188	189	188	*	248	348
	1500	188	189	188	*	248	348
	2500	200	202	200	*	279	379
65A(2.5")	150	138	145	156	*	195	295
	300	146	154	156	*	195	295
	600	156	157	156	*	195	295
	900	205	207	188	*	248	348
	1500	205	207	188	*	248	348
	2500	221	224	200	*	279	379
80A(3")	150	149	156	169	*	204	304
	300	159	167	169	*	204	304
	600	169	170	169	*	210	310
	900	221	222	230	*	280	380
	1500	230	232	230	*	280	380
	2500	330	333	249	*	345	445
100A(4")	150	176	183	197	*	235	335
	300	184	192	197	*	235	335
	600	197	199	197	*	243	343
	900	256	257	265	*	339	439
	1500	265	267	265	*	339	439
	2500	369	374	288	*	399	499
150A(6")	150	226	232	254	*	320	420
	300	237	245	254	*	320	420
	600	254	256	254	*	328	429
	900	357	359	384	*	425	570
	1500	384	387	384	*	425	570
	2500	432	439	410	*	500	620
200A(8")	150	272	278	305	*	383	510
	300	284	292	305	*	383	510
	600	305	307	305	*	388	551
	900	457	459	416	*	425	675
	1500	486	491	416	*	425	675
	2500	511	519	515	*	620	740
250A(10")	150	337	343	376	*	392	515
	300	354	362	376	*	392	515
	600	376	378	376	*	425	540
	900	496	497	496	*	600	845
	1500	534	537	496	*	600	845
	2500	686	693	635	*	747	867

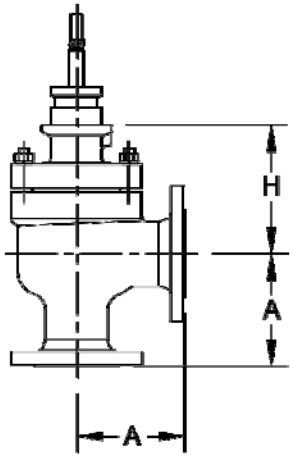

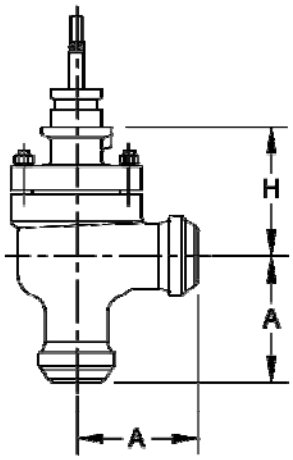

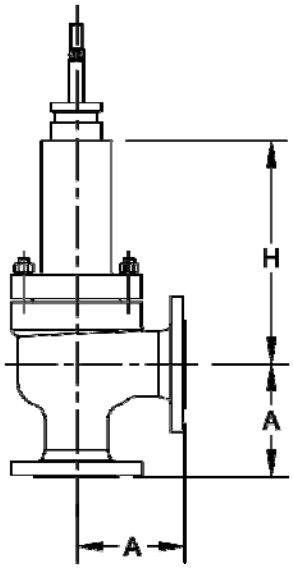

*1. a * Same as to A dimensions.*

2. Standard Process Connection of Welded type : under 2" SW. Over 2" BW application

3. Flanged End Face-to-Face dimensions are per ISA-75.08.01-2002 and 78.08.06-2002

4. Other size and Pressure rating grade valves : Please contact BFS Sales Rep. / Over 6" and 4500Lbs.

5. All dimensions are for reference only. Please consult the factory for certified dimensions.

Actuator Dimensions
Pneumatic Spring Diaphragm Actuators

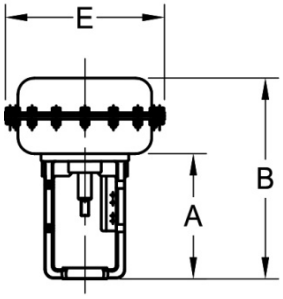

Standard

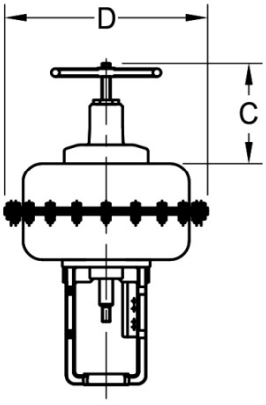

Top Handwheel

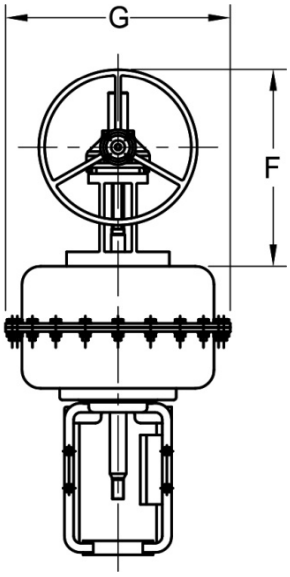

Top-Side Gear-Box Handwheel

Actuator Size	Actuator Dimensions (mm)							Weight (kg)	
	A	B	C	D	E	F	G	Standard	Handwheel
S1 / 250	210	340	200	230	250	-	-	14	17
S2 / 290	230	370	200	230	290	-	-	21	28
S3 / 370	230	410	200	230	370	-	-	40	49
S4 / 480	360	630	-	-	480	470	400	97	113
S5 / 550	360	680	-	-	550	470	400	125	149

** Side Mounted Handwheel.*

side mounted handwheels are available for the DD/DR-Series actuator. Contact BFS for detail and dimensions

** Manually operated actuators*

BFS offers handwheel operated actuators for applications where an mounted valve is not required or where compressed air service is unavailable

DD/DR-Series actuators are suitable for both on-off modulating service.

The DD/DR-Series is a pneumatic, spring-opposed diaphragm actuator operating from plant air. Excellent longterm accuracy and reliability is achieved through the use of multiple springs in the actuator.

The rugged one-piece yoke, the pressed steel diaphragm case and the special nylon reinforced diafragm provide dependable, high thrust performance. Additionally, the precisely formed diafragm eliminates friction and reduces variations in the effective area during operation which, in turn, results in exceptional linearity.

An optional top or side-mounted manual overrivde is available on both direct and reverse acting actuators.
Six different sizes of the DD/DR-Series actuators with the various accessories can virtually satisfy all application requirements.

DIMENSIONS

CD/CT-series / Double Acting Spring Less Type

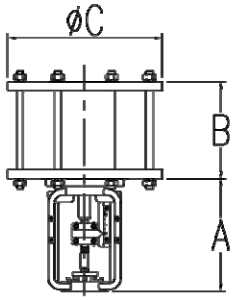

CD-series

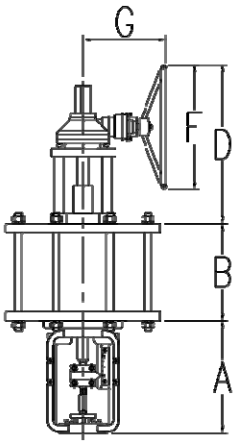

CD with Handwheel

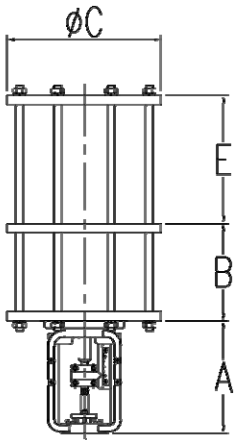

CT-series

unit/mm

Actuator size	A	B	C	D	E	F	G
CD20/200	230	280	280	500	375	400	215
CD25/250	360	280	340	500	375	400	215
CD30/300	360	280	390	500	375	400	215
CD35/350	490	330	440	600	500	400	215
CD40/400	490	330	490	600	500	400	215
CD50/500	600	380	600	600	500	400	215

** The marked "B" dimension is standard specification. Therefore based on client requirement, the actuator is to be manufactured differehtly as optional specification*

CS-series / Single Acting Spring Return Type

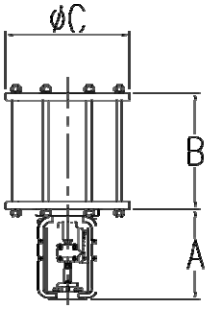

CS-series

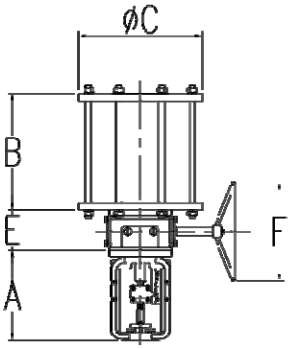

CS with Handwheel

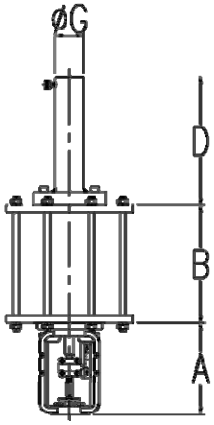

CS with Hydraulic Hand-jack

unit/mm

Actuator size	A	B	C	D	E	F	G
CS20/200	230	680	280	-	150	400	-
CS25/250	360	680	340	-	150	400	-
CS30/300	360	680	390	-	150	400	-
CS35/350	490	730	440	-	150	400	-
CS40/400	490	730	490	300	150	400	100
CS50/500	600	780	600	300	150	400	100

** The marked "B" dimension is standard specification. Therefore based on client requirement, the actuator is to be manufactured differehtly as optional specification*

Best Flow Solution

BFS Incorporation
23block-3lot, Geumdan-Industrial-Complex
#17, 114beongil, Geumdan-ro, Seo-gu, Incheon-city, Korea
T/+82-32-329-9142 F/+82-32-329-9148
www.bfsvalve.com