DK-LOK
Fittings & Valves

K Series JIC Tube Fittings

SAE J514 37° Flared

Catalog No. K-0
July 2012

Features

- Standard Materials: Stainless Steel, Carbon Steel and Brass.
- Universal Fittings for Inch and Metric tube.
- Fitting without sleeve and nut for connection to a female swivel on a hose assembly.

Tube to Tube Union

Union KU 07

Union Elbow KL 08

Union Tee KT 09

Union Cross KX 10

Bulkhead Union KUB 11

Weld Bulkhead Union KBUW 12

Bulkhead Union Elbow KBL 13

Tube Port to Tube Port

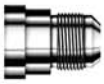
Fitting Port Reducer KPR 14

Tube to Male Pipe

Male Connector KMC 15

Male Elbow KLM 16

Male Run Tee KTRM 17

Male Branch Tee KTBM 18

45° Male Elbow KLBM 19

Tube to Female Pipe

Female Connector KCF 20

Bulkhead Female Connector KCBF 21

Female Elbow KLF 22

Female Run Tee KTRF 23

Female Branch Tee KTBF 24

Tube to Straight Thread

O-Seal G Male Connector KMC-GO 25

O-Seal UNF Male Connector KMCS-U 26

O-Seal UNF Male Elbow KLS-UP 27

O-Seal 45° UNF Male Elbow KLBS-UP 28

O-Seal UNF Branch Tee KTBS-UP 29

O-Seal UNF Run Tee KTRS-UP 30

Swivel Fittings

Swivel Male Connector KSMC 31

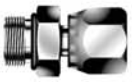
Swivel UNF Male Connector KSMCS-U 32

Swivel Female Connector KSCF 33

Swivel Elbow KSL 34

Swivel Run Tee KSRT 35

Swivel Branch Tee KSBT 36

Cap and Plug

Cap for Tube End KC 37

Plug for Fitting Port KP 37

Spare Parts

Nut KN 38

Sleeve KS 38

Bulkhead Lok Nut KBN 39

Design

DK-LOK K Series JIC Tube Fitting consists of body, sleeve and nut and meets the requirements of SAE J514 and ISO 8434-2 standards.

DK-LOK K Series JIC Tube Fittings are capable of connecting to inch and metric tube with no changing the Sleeve and Nut.

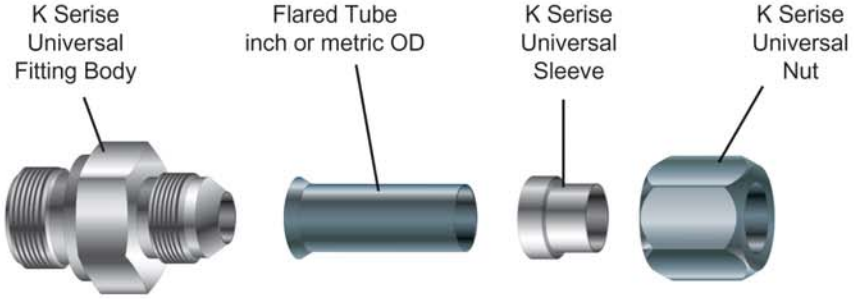

Example: KU-4T-SA fitting capable of connecting to 1/4″ OD or 6mm OD Stainless steel tubing.

The fitting body without sleeve and nut is widely used as a hose adapter for connection to a female swivel on a hose assembly.

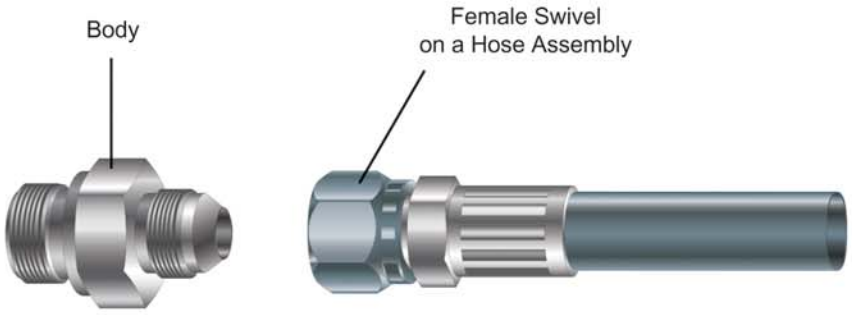

Technical Information

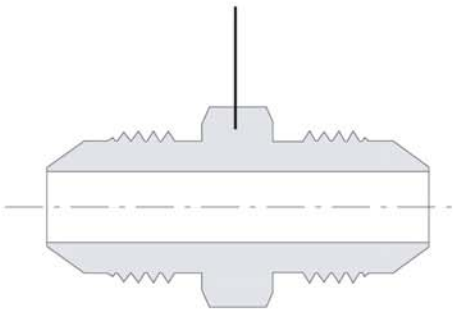

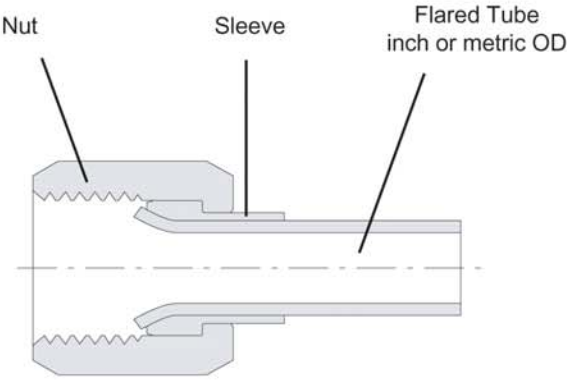

Table 1. Material Standards

Fitting Materials	Body		Nut and Sleeve	Flared Tubing (Not supplied)
	Bar Stock	Forging		
Stainless Steel 316	ASTM A276/A479 Type 316/316L	ASTM A182 F316/F316L	ASTM A276/A479 Type 316/316L Nut supplied with inside Molybdenum coated.	ASTM A269 ASTM A213
Carbon Steel	ASTM A108 JIS G4051 S20C - S48C	ASTM A105 JIS G4051 S20C - S48C	ASTM A108 JIS G4051 S20C - S48C Nut supplied with inside Molybdenum coated.	ASTM A179 ASTM A161
Brass	ASTM B453 UNS C35300 JIS H3250 Alloy C3604	ASTM B283 UNS 37700 JIS G4051 Alloy C3771	ASTM B453 UNS C35300 JIS H3250 Alloy C3604 Nut supplied with inside lubricated.	Copper Tubing ASTM B88 ASTM B75

Table 2. Working Pressure Rating

For fitting materials of Stainless steel and Carbon steel.

SAE Nominal Size	Tube OD		Union and Bulkheads		Fitting with Female Swival		Fitting with Pipe Thread	
	inch	mm	psi	bar	psi	bar	psi	bar
2	1/8	3	5000	345	5000	345	5000	345
3	3/16	4	5000	345	5000	345	5000	345
4	1/4	6	5000	345	4500	310	5000	345
5	5/16	8	5000	345	4000	275	5000	345
6	3/8	10	5000	345	4000	275	4000	275
8	1/2	12	4500	310	4000	275	3000	210
10	5/8	16	3500	240	3000	210	3000	210
12	3/4	18, 20	3500	240	3000	210	2500	170
14	7/8	22	3000	210	2500	170	2500	170
16	1	25	3000	210	2500	170	2000	140
20	1 1/4	32	2500	170	2000	140	1150	80
24	1 1/2	38	2000	140	1500	105	1000	70
32	2	50	1500	105	1125	80	1000	70

Table 3. Suggested Tubing Wall Thickness

SAE Nominal Size	Inch Tube OD inch	Wall Thickness, inch		Metric Tube OD mm	Wall Thickness, mm	
		Min.	Max.		Min.	Max.
2	1/8	0.010	0.035	-	-	-
3	3/16	0.010	0.035	-	-	-
4	1/4	0.020	0.065	6	0.5	2.0
5	5/16	0.020	0.065	8	0.5	2.0
6	3/8	0.020	0.065	10	0.5	2.0
8	1/2	0.028	0.083	12	1.0	2.0
10	5/8	0.035	0.095	16	1.0	2.5
12	3/4	0.035	0.109	18, 20	1.0	3.0
14	7/8	0.035	0.109	22	1.0	3.0
16	1	0.035	0.120	25	1.0	3.0
20	1 1/4	0.049	0.120	32	1.5	3.0
24	1 1/2	0.049	0.120	38	1.5	3.0
32	2	0.058	0.134	50	1.5	3.5

Table 4. Fitting s Surface Finish

Stainless Steel	Carbon Steel	Brass
Passivation	Yellow Zinc plated.	Acid Cleaned. On request, chrome plated brass fitting can be supplied.

Ordering Information

To order a fitting without nut and sleeve, select an applicable part number and fitting material designator.
Example: KU-2T-S

To order a fitting with nut and sleeve factory assembled, select an applicable part number, fitting material designator and suffix **A** to the ordering number.
Example: KU-2T-S**A**

Table 5. Fitting Material Designator

Stainless Steel 316	Carbon Steel	Brass
S	C	B

Table 6. Tube OD Designator

OD inch	1/16	1/8	3/16	1/4	5/16	3/8	1/2	5/8	3/4	7/8	1	1 1/4	1 1/2	2
Designator	1	2	3	4	5	6	8	10	12	14	16	20	24	36
OD mm	4mm	6mm	8mm	10mm	12mm	16mm	18mm	20mm	22mm	25mm	25mm	32mm	38mm	50mm
Designator	4M	6M	8M	10M	12M	16M	18M	20M	22M	25M	25M	32M	38M	50M

Table 7. Thread Symbol Designator

Thread	Symbol	Standards
Taper Thread	N	ASME/ANSI B1.20.1
	R	ISO 7-1, BS 21, JIS B 0203
Parallel Thread	G	ISO 228-1, BS 2779, JIS B0202
	U	ASME B1.1

Table 8. Taper Pipe Thread Designator

Nominal Size	1/8	1/4	3/8	1/2	3/4	1	1 1/4	1 1/2	2
N	01N	02N	03N	04N	06N	08N	10N	12N	16N
R	01R	02R	03R	04R	06R	08R	10R	12R	16R

Table 9. ASME B1.1 Unified Thread Designator

Size	5/16	3/8	7/16	1/2	9/16	3/4	7/8	1 1/16	1 3/16	1 5/16	1 5/8	1 7/8	2 1/2
Size Designator	02	03	04	05	06	08	10	12	14	16	20	24	32

Union

KU

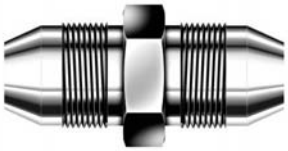

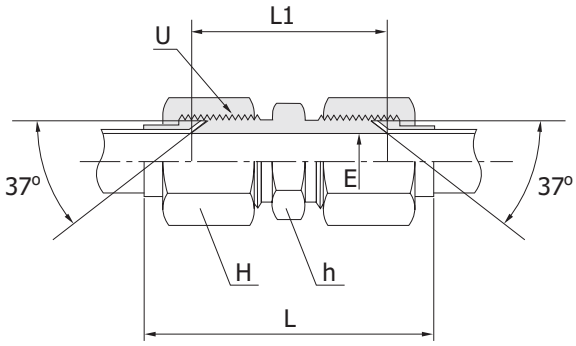

Tube to Tube Union

Part No.	Tube O.D		U (UNF)	E	L	L1	h (HEX)	H (HEX)
	Inch	Metric						
KU-2T	1/8"	3	5/16"-24	1.6	45.3	29.7	11.0	9.5
KU-3T	3/16"	4	3/8"-24	3.2	50.0	31.2	11.0	11.0
KU-4T	1/4"	6	7/16"-20	4.4	53.0	34.8	12.0	14.2
KU-5T	5/16"	8	1/2"-20	6.0	55.6	34.8	14.2	15.8
KU-6T	3/8"	10	9/16"-18	7.5	59.6	35.8	16.0	17.4
KU-8T	1/2"	12	3/4"-16	9.9	66.5	41.1	21.0	22.2
KU-10T	5/8"	16	7/8"-14	12.3	81.0	47.8	23.8	25.4
KU-12T	3/4"	18, 20	1 1/16"-12	15.5	85.9	54.9	29.0	31.7
KU-14T	7/8"	22	1 3/16"-12	18.0	91.3	56.1	32.0	34.9
KU-16T	1"	25	1 5/16"-12	21.5	95.2	57.2	36.0	38.1
KU-20T	1-1/4"	32	1 5/8"-12	27.5	98.7	61.7	46.0	50.8
KU-24T	1-1/2"	38	1 7/8"-12	33.0	123.2	69.8	50.0	57.1
KU-32T	2"	50	2 1/2"-12	45.0	141.4	86.4	66.7	73.0

Union Elbow

KL

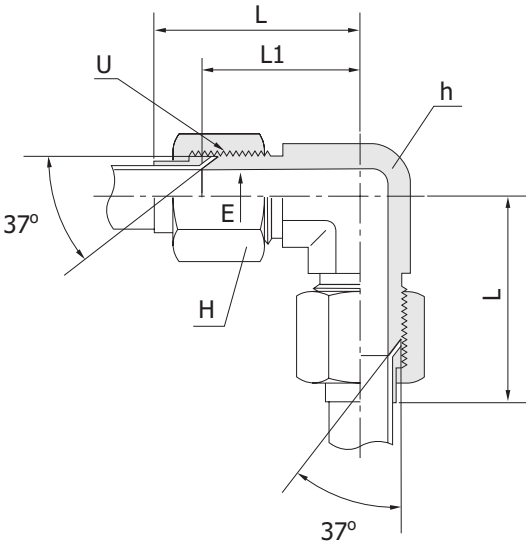

Tube to Tube Union

Part No.	Tube O.D		U (UNF)	E	L	L1	h (HEX)	H (HEX)
	Inch	Metric						
KL-2T	1/8"	3	5/16"-24	1.6	27.4	19.6	11.1	9.5
KL-3T	3/16"	4	3/8"-24	3.2	30.5	21.1	11.1	11.0
KL-4T	1/4"	6	7/16"-20	4.4	31.7	22.6	11.1	14.2
KL-5T	5/16"	8	1/2"-20	6.0	34.5	24.1	14.2	15.8
KL-6T	3/8"	10	9/16"-18	7.5	38.8	26.9	14.2	17.4
KL-8T	1/2"	12	3/4"-16	9.9	44.5	31.8	19.0	22.2
KL-10T	5/8"	16	7/8"-14	12.3	53.4	36.8	22.2	25.4
KL-12T	3/4"	18, 20	1 1/16"-12	15.5	57.7	42.2	27.0	31.7
KL-14T	7/8"	22	1 3/16"-12	18.0	63.3	45.7	33.3	34.9
KL-16T	1"	25	1 5/16"-12	21.5	65.0	46.0	33.3	38.1
KL-20T	1-1/4"	32	1 5/8"-12	37.5	70.8	52.3	41.3	50.8
KL-24T	1-1/2"	38	1 7/8"-12	33.0	85.9	59.2	47.6	57.1
KL-32T	2"	50	2 1/2"-12	45.0	105.2	77.7	63.5	73.0

Union Tee

KT

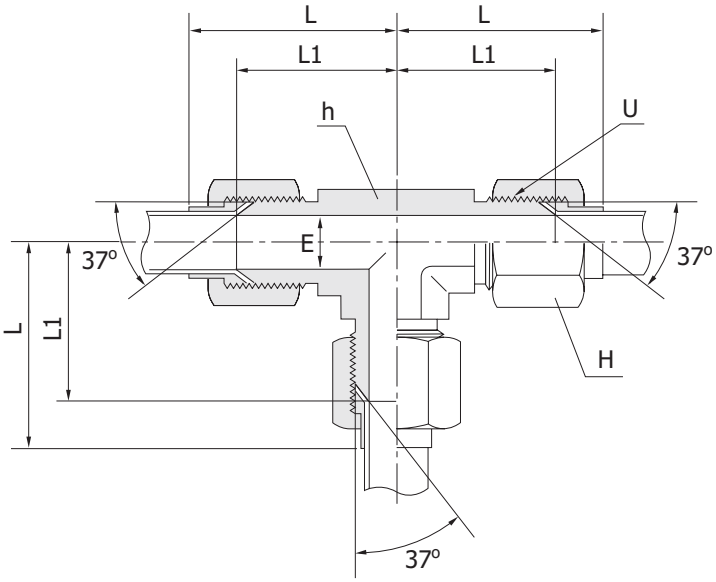

Tube to Tube Union

Part No.	Tube O.D		U (UNF)	E	L	L1	h (HEX)	H (HEX)
	Inch	Metric						
KT-2T	1/8"	3	5/16"-24	1.6	27.4	19.6	11.1	9.5
KT-3T	3/16"	4	3/8"-24	3.2	30.5	21.1	11.1	11.0
KT-4T	1/4"	6	7/16"-20	4.4	31.7	22.6	11.1	14.2
KT-5T	5/16"	8	1/2"-20	6.0	34.5	24.1	14.2	15.8
KT-6T	3/8"	10	9/16"-18	7.5	38.8	26.9	14.2	17.4
KT-8T	1/2"	12	3/4"-16	9.9	44.5	31.8	19.0	22.2
KT-10T	5/8"	16	7/8"-14	12.3	53.4	36.8	22.2	25.4
KT-12T	3/4"	18, 20	1 1/16"-12	15.5	57.7	42.2	27.0	31.7
KT-14T	7/8"	22	1 3/16"-12	18.0	63.3	45.7	33.3	34.9
KT-16T	1"	25	1 5/16"-12	21.5	65.0	46.0	34.9	38.1
KT-20T	1-1/4"	32	1 5/8"-12	37.5	70.8	52.3	41.3	50.8
KT-24T	1-1/2"	38	1 7/8"-12	33.0	85.9	59.2	47.6	57.1
KT-32T	2"	50	2 1/2"-12	45.0	105.2	77.7	63.5	73.0

Union Cross

KX

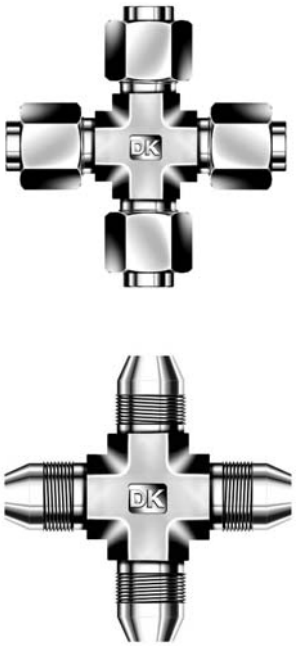

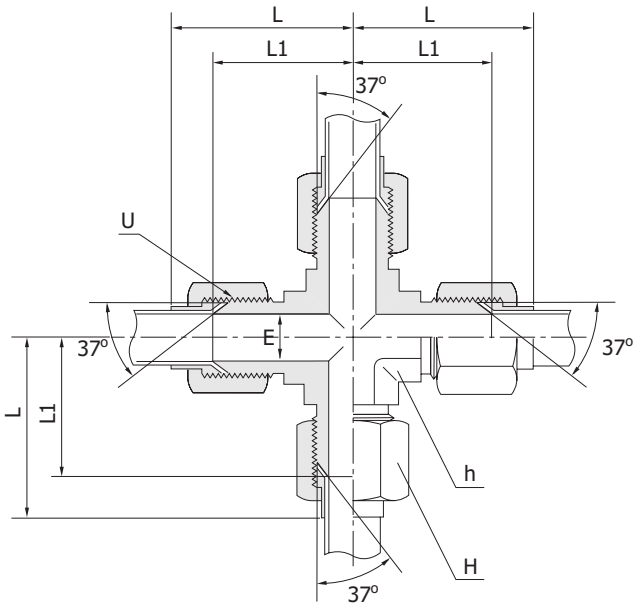

Tube to Tube Union

Part No.	Tube O.D		U (UNF)	E	L	L1	h (HEX)	H (HEX)
	Inch	Metric						
KX-2T	1/8"	3	5/16"-24	1.6	27.4	19.6	11.1	9.5
KX-3T	3/16"	4	3/8"-24	3.2	30.5	21.1	11.1	11.0
KX-4T	1/4"	6	7/16"-20	4.4	31.7	22.6	11.1	14.2
KX-5T	5/16"	8	1/2"-20	6.0	34.5	24.1	14.2	15.8
KX-6T	3/8"	10	9/16"-18	7.5	38.8	26.9	14.2	17.4
KX-8T	1/2"	12	3/4"-16	9.9	44.5	31.8	19.0	22.2
KX-10T	5/8"	16	7/8"-14	12.3	53.4	36.8	22.2	25.4
KX-12T	3/4"	18, 20	1 1/16"-12	15.5	57.7	42.2	27.0	31.7
KX-14T	7/8"	22	1 3/16"-12	18.0	63.3	45.7	33.3	34.9
KX-16T	1"	25	1 5/16"-12	21.5	65.0	46.0	34.9	38.1
KX-20T	1-1/4"	32	1 5/8"-12	37.5	70.8	52.3	41.3	50.8
KX-24T	1-1/2"	38	1 7/8"-12	33.0	85.9	59.2	47.6	57.1
KX-32T	2"	50	2 1/2"-12	45.0	105.2	77.7	63.5	73.0

Bulkhead Union

KUB

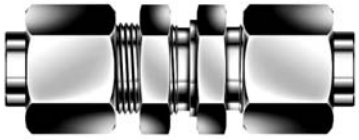

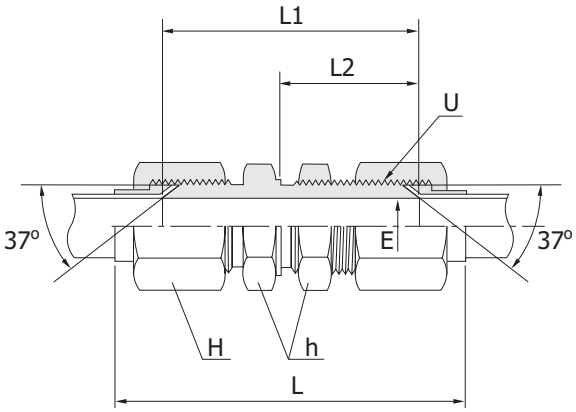

Tube to Tube Union

Part No.	Tube O.D		U (UNF)	E	L	L1	L2	h (HEX)	H (HEX)
	Inch	Metric							
KUB-2T	1/8"	3	5/16"-24	1.6	63.1	47.5	28.2	14.2	9.5
KUB-3T	3/16"	4	3/8"-24	3.2	67.1	48.3	28.2	15.8	11.0
KUB-4T	1/4"	6	7/16"-20	4.4	70.8	52.6	30.5	17.4	14.2
KUB-5T	5/16"	8	1/2"-20	6.0	73.4	52.6	30.5	19.0	15.8
KUB-6T	3/8"	10	9/16"-18	7.5	79.2	55.4	32.5	20.6	17.4
KUB-8T	1/2"	12	3/4"-16	9.9	87.4	62.0	36.6	25.4	22.2
KUB-10T	5/8"	16	7/8"-14	12.3	102.8	69.6	40.1	28.5	25.4
KUB-12T	3/4"	18, 20	1 1/16"-12	15.5	109.5	78.5	44.4	34.9	31.7
KUB-14T	7/8"	22	1 3/16"-12	18.0	114.4	79.2	44.4	38.1	34.9
KUB-16T	1"	25	1 5/16"-12	21.5	117.8	79.8	44.4	41.2	38.1
KUB-20T	1-1/4"	32	1 5/8"-12	37.5	121.1	84.1	45.7	47.6	50.8
KUB-24T	1-1/2"	38	1 7/8"-12	33.0	142.8	89.4	46.0	53.9	57.1
KUB-32T	2"	50	2 1/2"-12	45.0	161.7	106.7	53.1	69.8	73.0

Weld Bulkhead Union

KBUW

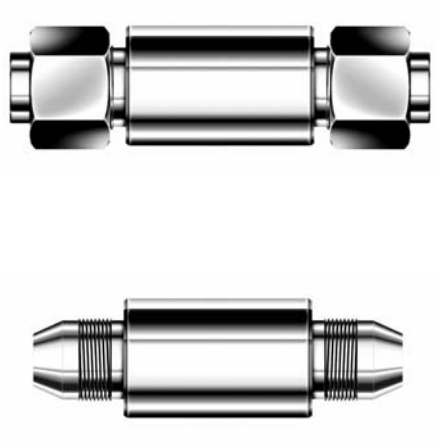

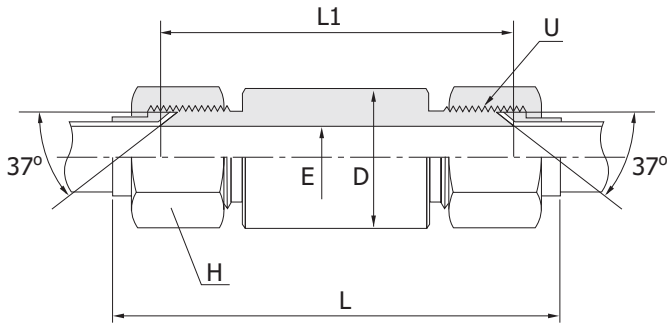

Tube to Tube Union

Part No.	Tube O.D		U (UNF)	E	D	L	L1	H (HEX)
	Inch	Metric						
KBUW-2T	1/8"	3	5/16"-24	1.6	11.0	85.6	70.0	9.5
KBUW-3T	3/16"	4	3/8"-24	3.2	11.0	88.8	70.0	11.0
KBUW-4T	1/4"	6	7/16"-20	4.4	14.0	98.2	80.0	14.2
KBUW-5T	5/16"	8	1/2"-20	6.0	16.0	120.8	100.0	15.8
KBUW-6T	3/8"	10	9/16"-18	7.5	17.0	123.8	100.0	17.4
KBUW-8T	1/2"	12	3/4"-16	9.9	22.0	125.4	100.0	22.2
KBUW-10T	5/8"	16	7/8"-14	12.3	25.0	143.2	110.0	25.4
KBUW-12T	3/4"	18, 20	1 1/16"-12	15.5	30.0	151.0	120.0	31.7
KBUW-14T	7/8"	22	1 3/16"-12	18.0	32.0	165.2	130.0	34.9
KBUW-16T	1"	25	1 5/16"-12	21.5	40.0	168.0	130.0	38.1
KBUW-20T	1-1/4"	32	1 5/8"-12	27.5	46.0	177.0	140.0	50.8
KBUW-24T	1-1/2"	38	1 7/8"-12	33.0	50.0	193.4	140.0	57.1
KBUW-32T	2"	50	2 1/2"-12	45.0	70.0	205.0	150.0	73.0

Bulkhead Union Elbow

KBL

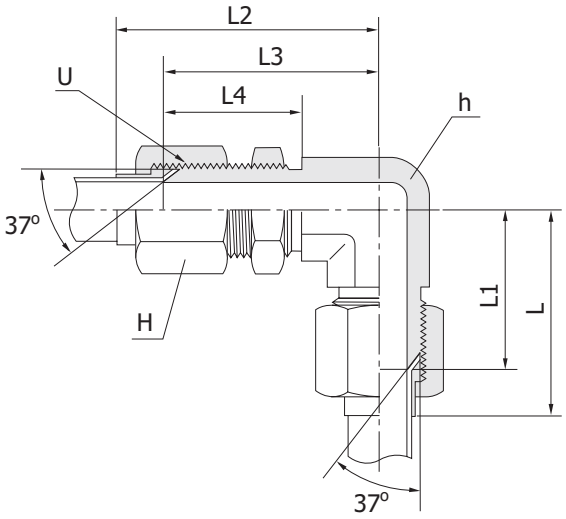

Tube to Tube Union

Part No.	Tube O.D		U (UNF)	L	L1	L2	L3	L4	h (HEX)	H (HEX)
	Inch	Metric								
KBL-2T	1/8"	3	5/16"-24	30.2	22.4	45.9	38.1	23.4	11.1	9.5
KBL-3T	3/16"	4	3/8"-24	33.3	23.9	47.5	38.1	23.4	11.1	11.0
KBL-4T	1/4"	6	7/16"-20	33.7	24.6	49.5	40.4	25.9	11.1	14.2
KBL-5T	5/16"	8	1/2"-20	37.3	26.9	54.1	43.7	25.9	14.3	15.8
KBL-6T	3/8"	10	9/16"-18	39.6	27.7	57.9	46.0	27.7	14.3	17.4
KBL-8T	1/2"	12	3/4"-16	47.2	34.5	66.3	53.6	31.8	19.0	22.2
KBL-10T	5/8"	16	7/8"-14	56.2	39.6	77.3	60.7	35.8	22.2	25.4
KBL-12T	3/4"	18, 20	1 1/16"-12	60.7	45.2	83.1	67.6	39.6	27.0	31.7
KBL-14T	7/8"	22	1 3/16"-12	66.4	48.8	88.7	71.1	39.6	33.3	34.9
KBL-16T	1"	25	1 5/16"-12	68.3	49.3	90.1	71.1	39.6	33.3	38.1
KBL-20T	1-1/4"	32	1 5/8"-12	73.6	55.1	97.7	79.2	40.9	41.3	50.8
KBL-24T	1-1/2"	38	1 7/8"-12	86.1	59.4	113.6	86.9	41.1	47.6	57.1
KBL-32T	2"	50	2 1/2"-12	100.9	73.4	131.9	104.4	48.5	63.5	73.0

Fitting Port Reducer

KPR

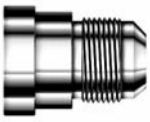

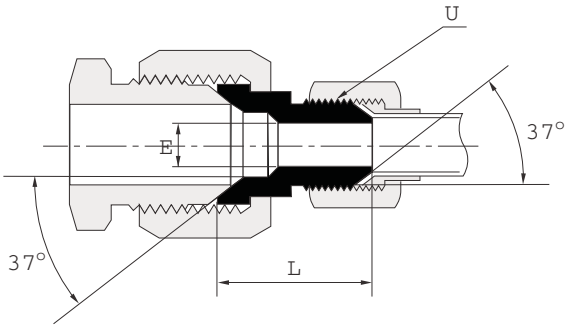

Tube Port to Tube Port

Part No.	Reducing Tube O.D	U (UNF)	E	L
KPR6T-4T	3/8" X 1/4"	7/16"-20	4.4	24.6
KPR8T-4T	1/2" X 1/4"	7/16"-20	4.4	25.4
KPR8T-6T	1/2" X 3/8"	9/16"-18	7.5	25.4
KPR10T-4T	5/8" X 1/4"	7/16"-20	4.4	26.2
KPR10T-6T	5/8" X 3/8"	9/16"-18	7.5	26.2
KPR12T-4T	3/4" X 1/4"	7/16"-20	4.4	27.7
KPR12T-6T	3/4" X 3/8"	9/16"-18	7.5	27.7
KPR12T-8T	3/4" X 1/2"	3/4"-16	10.0	30.2
KPR16T-12T	1" X 3/4"	1-1/16"-12	15.5	37.3
KPR20T-12T	1-1/4" X 3/4"	1-1/16"-12	15.5	38.3
KPR20T-16T	1-1/4" X 1"	1-5/16"-12	21.5	40.3
KPR24T-20T	1-1/2" X 1-1/4"	1 5/8"-12	27.5	42.9

Male Connector

KMC

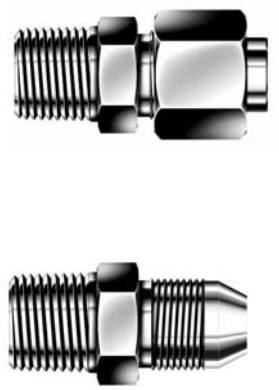

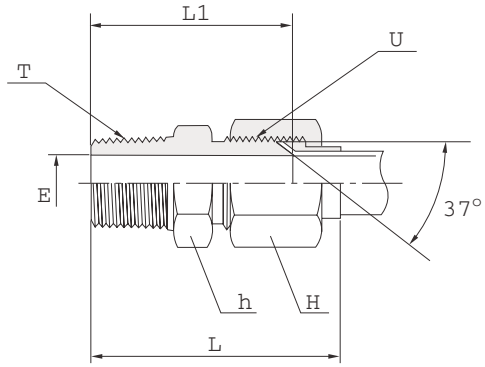

Tube to Male Pipe

Part No.	Tube O.D		T (NPT)	U (UNF)	E	L	L1	h (HEX)	H (HEX)
	Inch	Metric							
KMC2T-2N	1/8"	3	1/8"	5/16"-24	1.6	36.0	28.2	11.1	9.5
KMC3T-2N	3/16"	4	1/8"	3/8"-24	3.2	38.4	29.0	11.1	11.0
KMC4T-2N	1/4"	6	1/8"	7/16"-20	4.4	40.1	31.0	12.7	14.2
KMC5T-2N	5/16"	8	1/8"	1/2"-20	6.0	41.4	31.0	14.2	15.8
KMC6T-4N	3/8"	10	1/4"	9/16"-18	7.5	48.2	36.3	15.8	17.4
KMC8T-6N	1/2"	12	3/8"	3/4"-16	9.9	51.6	38.9	20.6	22.2
KMC10T-8N	5/8"	16	1/2"	7/8"-14	12.3	64.6	48.0	20.6	25.4
KMC12T-12N	3/4"	18, 20	3/4"	1 1/16"-12	15.5	67.8	52.3	28.5	31.7
KMC14T-12N	7/8"	22	3/4"	1 3/16"-12	18.0	70.7	53.1	31.7	34.9
KMC16T-16N	1"	25	1"	1 5/16"-12	21.5	77.4	58.4	34.9	38.1
KMC20T-20N	1-1/4"	32	1-1/4"	1 5/8"-12	27.5	80.7	62.2	42.8	50.8
KMC24T-24N	1-1/2"	38	1-1/2"	1 7/8"-12	33.0	94.8	68.1	50.8	57.1
KMC32T-32N	2"	50	2"	2 1/2"-12	45.0	106.5	79.0	66.6	73.0

Male Elbow

KLM

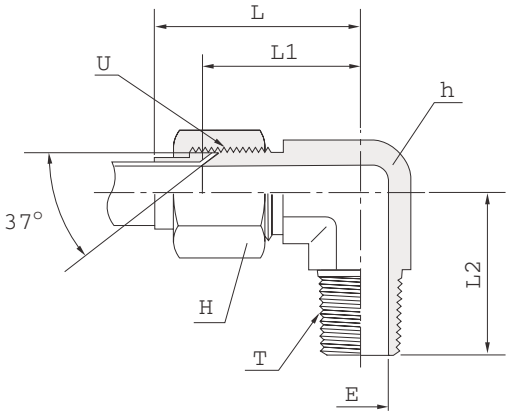

Tube to Male Pipe

Part No.	Tube O.D		T (NPT)	U (UNF)	E	L	L1	L2	h (HEX)	H (HEX)
	Inch	Metric								
KLM2T-2N	1/8"	3	1/8"	5/16"-24	1.6	27.4	19.6	18.3	11.1	9.5
KLM3T-2N	3/16"	4	1/8"	3/8"-24	3.2	30.5	21.1	18.3	11.1	11.0
KLM4T-2N	1/4"	6	1/8"	7/16"-20	4.4	31.7	22.6	19.8	11.1	14.2
KLM5T-2N	5/16"	8	1/8"	1/2"-20	6.0	34.5	24.1	19.8	14.3	15.8
KLM6T-4N	3/8"	10	1/4"	9/16"-18	7.5	38.8	26.9	27.7	14.3	17.4
KLM8T-6N	1/2"	12	3/8"	3/4"-16	9.9	44.5	31.8	31.0	19.0	22.2
KLM10T-8N	5/8"	16	1/2"	7/8"-14	12.3	53.4	36.8	37.3	22.2	25.4
KLM12T-12N	3/4"	18, 20	3/4"	1 1/16"-12	15.5	57.7	42.2	40.4	27.0	31.7
KLM14T-12N	7/8"	22	3/4"	1 3/16"-12	18.0	63.3	45.7	42.9	33.3	34.9
KLM16T-16N	1"	25	1"	1 5/16"-12	21.5	65.0	46.0	50.0	33.3	38.1
KLM20T-20N	1-1/4"	32	1-1/4"	1 5/8"-12	27.5	70.8	52.3	60.5	41.3	50.8
KLM24T-24N	1-1/2"	38	1-1/2"	1 7/8"-12	33.0	85.9	59.2	67.1	47.6	57.1
KLM32T-32N	2"	50	2"	2 1/2"-12	45.0	105.2	77.7	76.2	63.5	73.0

Male Run Tee

KTRM

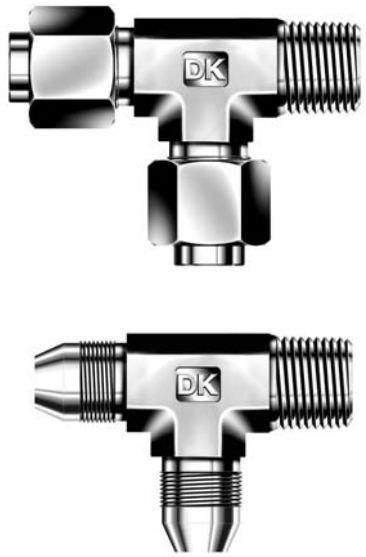

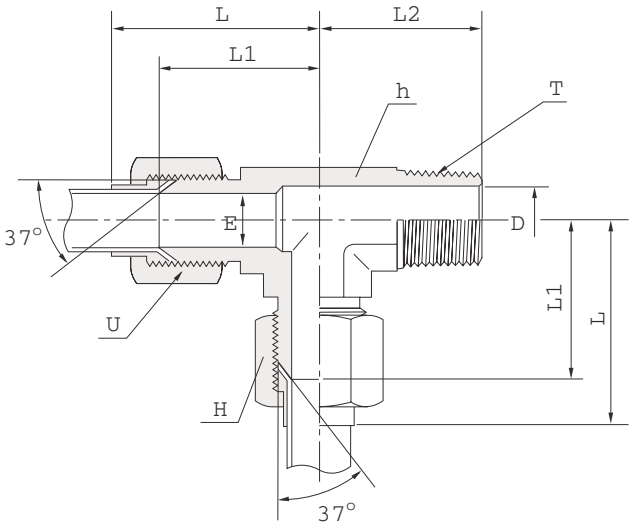

Tube to Male Pipe

Part No.	Tube O.D		T (NPT)	U (UNF)	E	D	L	L1	L2	h (HEX)	H (HEX)
	Inch	Metric									
KTRM2T-2N	1/8"	3	1/8"	5/16"-24	1.6	4.8	27.4	19.6	18.3	11.1	9.5
KTRM3T-2N	3/16"	4	1/8"	3/8"-24	3.2	4.8	30.5	21.1	18.3	11.1	11.0
KTRM4T-2N	1/4"	6	1/8"	7/16"-20	4.4	4.8	31.7	22.6	19.8	11.1	14.2
KTRM5T-2N	5/16"	8	1/8"	1/2"-20	6.0	4.8	34.5	24.1	19.8	14.3	15.8
KTRM6T-4N	3/8"	10	1/4"	9/16"-18	7.5	7.0	38.8	26.9	27.7	14.3	17.4
KTRM8T-6N	1/2"	12	3/8"	3/4"-16	9.9	10.3	44.5	31.8	31.0	19.0	22.2
KTRM10T-8N	5/8"	16	1/2"	7/8"-14	12.3	13.5	53.4	36.8	37.3	22.2	25.4
KTRM12T-12N	3/4"	18, 20	3/4"	1 1/16"-12	15.5	18.0	57.7	42.2	40.4	27.0	31.7
KTRM14T-12N	7/8"	22	3/4"	1 3/16"-12	18.0	18.0	63.3	45.7	42.9	33.3	34.9
KTRM16T-16N	1"	25	1"	1 5/16"-12	21.5	23.8	65.0	46.0	50.0	33.3	38.1
KTRM20T-20N	1-1/4"	32	1-1/4"	1 5/8"-12	27.5	31.7	70.8	52.3	60.5	41.3	50.8
KTRM24T-24N	1-1/2"	38	1-1/2"	1 7/8"-12	33.0	38.0	85.9	59.2	67.1	47.6	57.1
KTRM32T-32N	2"	50	2"	2 1/2"-12	45.0	49.0	105.2	77.7	76.2	63.5	73.0

Male Branch Tee

KTBM

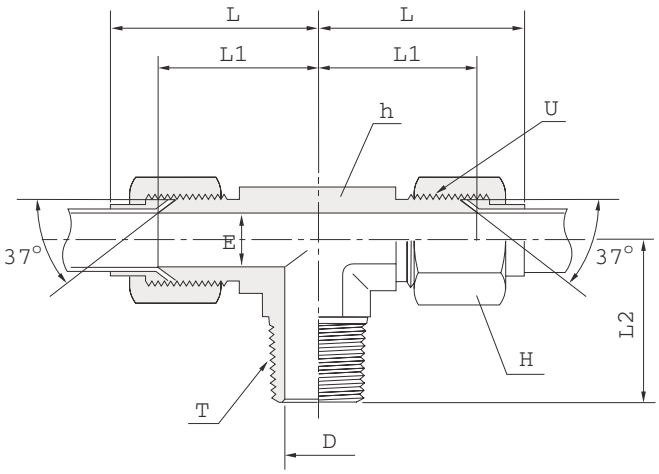

Tube to Male Pipe

Part No.	Tube O.D		T (NPT)	U (UNF)	E	D	L	L1	L2	h (HEX)	H (HEX)
	Inch	Metric									
KTBM2T-2N	1/8"	3	1/8"	5/16"-24	1.6	4.8	27.4	19.6	18.3	11.1	9.5
KTBM3T-2N	3/16"	4	1/8"	3/8"-24	3.2	4.8	30.5	21.1	18.3	11.1	11.0
KTBM4T-2N	1/4"	6	1/8"	7/16"-20	4.4	4.8	31.7	22.6	19.8	11.1	14.2
KTBM5T-2N	5/16"	8	1/8"	1/2"-20	6.0	4.8	34.5	24.1	19.8	14.3	15.8
KTBM6T-4N	3/8"	10	1/4"	9/16"-18	7.5	7.0	38.8	26.9	27.7	14.3	17.4
KTBM8T-6N	1/2"	12	3/8"	3/4"-16	9.9	10.3	44.5	31.8	31.0	19.0	22.2
KTBM10T-8N	5/8"	16	1/2"	7/8"-14	12.3	13.5	53.4	36.8	37.3	22.2	25.4
KTBM12T-12N	3/4"	18, 20	3/4"	1 1/16"-12	15.5	18.0	57.7	42.2	40.4	27.0	31.7
KTBM14T-12N	7/8"	22	3/4"	1 3/16"-12	18.0	18.0	63.3	45.7	42.9	33.3	34.9
KTBM16T-16N	1"	25	1"	1 5/16"-12	21.5	23.8	65.0	46.0	50.0	35.0	38.1
KTBM20T-20N	1-1/4"	32	1-1/4"	1 5/8"-12	37.5	31.7	70.8	52.3	60.5	41.3	50.8
KTBM24T-24N	1-1/2"	38	1-1/2"	1 7/8"-12	33.0	38.0	85.9	59.2	67.1	47.6	57.1
KTBM32T-32N	2"	50	2"	2 1/2"-12	45.0	49.0	105.2	77.7	76.2	63.5	73.0

45° Male Elbow

KLBM

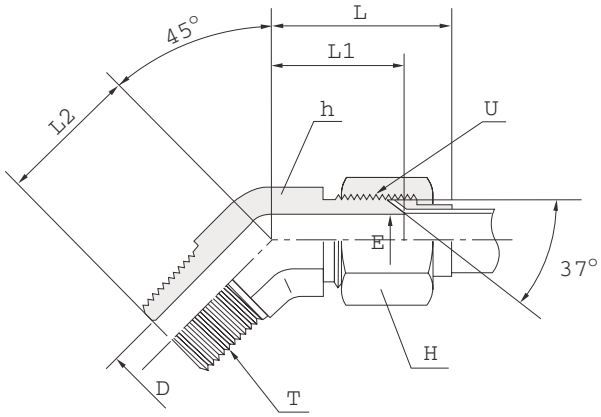

Tube to Male Pipe

Part No.	Tube O.D		T (NPT)	U (UNF)	E	D	L	L1	L2	h (HEX)	H (HEX)
	Inch	Metric									
KLBM2T-2N	1/8"	3	1/8"	5/16"-24	1.6	1.6	25.3	17.5	13.2	11.1	9.5
KLBM3T-2N	3/16"	4	1/8"	3/8"-24	3.2	3.2	26.9	17.5	13.2	11.1	11.0
KLBM4T-2N	1/4"	6	1/8"	7/16"-20	4.4	4.4	27.4	18.3	16.3	11.1	14.2
KLBM5T-2N	5/16"	8	1/8"	1/2"-20	6.0	6.0	30.0	19.6	16.3	14.3	15.8
KLBM6T-4N	3/8"	10	1/4"	9/16"-18	7.5	7.5	33.0	21.1	21.8	14.3	17.4
KLBM8T-6N	1/2"	12	3/8"	3/4"-16	9.9	9.9	37.6	24.9	24.1	19.0	22.2
KLBM10T-8N	5/8"	16	1/2"	7/8"-14	12.3	12.3	44.8	28.2	29.7	22.2	25.4
KLBM12T-12N	3/4"	18, 20	3/4"	1 1/16"-12	15.5	15.5	48.0	32.5	30.5	27.0	31.7
KLBM14T-12N	7/8"	22	3/4"	1 3/16"-12	18.0	18.0	54.4	36.8	33.0	33.3	34.9
KLBM16T-16N	1"	25	1"	1 5/16"-12	21.5	21.5	56.3	37.3	37.6	35.0	38.1
KLBM20T-20N	1-1/4"	32	1-1/4"	1 5/8"-12	37.5	37.5	58.9	40.4	42.4	41.3	50.8
KLBM24T-24N	1-1/2"	38	1-1/2"	1 7/8"-12	33.0	33.0	71.9	45.2	45.0	47.6	57.1
KLBM32T-32N	2"	50	2"	2 1/2"-12	45.0	45.0	83.9	56.4	53.6	63.5	73.0

Female Connector

KCF

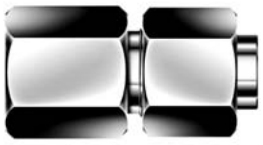

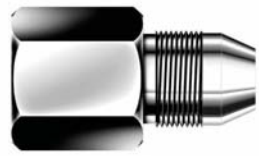

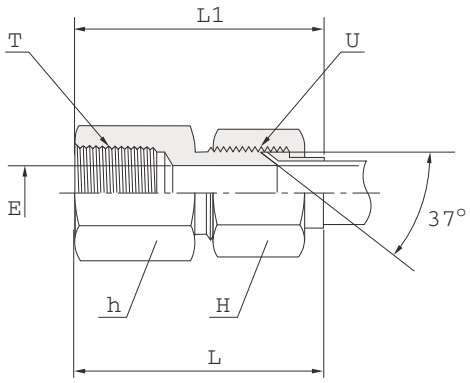

Tube to Female Pipe

Part No.	Tube O.D		T (NPT)	U (UNF)	E	L	L1	h (HEX)	H (HEX)
	Inch	Metric							
KCF2T-2N	1/8"	3	1/8"	5/16"-24	1.6	36.2	28.4	14.2	9.5
KCF3T-2N	3/16"	4	1/8"	3/8"-24	3.2	38.1	28.7	14.2	11.0
KCF4T-2N	1/4"	6	1/8"	7/16"-20	4.4	39.3	30.2	14.2	14.2
KCF5T-2N	5/16"	8	1/8"	1/2"-20	6.0	40.1	29.7	14.2	15.8
KCF6T-4N	3/8"	10	1/4"	9/16"-18	7.5	47.5	35.6	19.0	17.4
KCF8T-6N	1/2"	12	3/8"	3/4"-16	9.9	52.3	39.6	22.2	22.2
KCF10T-8N	5/8"	16	1/2"	7/8"-14	12.3	64.6	48.0	28.5	25.4
KCF12T-12N	3/4"	18, 20	3/4"	1 1/16"-12	15.5	67.8	52.3	34.9	31.7
KCF14T-12N	7/8"	22	3/4"	1 3/16"-12	18.0	69.9	52.3	34.9	34.9
KCF16T-16N	1"	25	1"	1 5/16"-12	21.5	78.7	59.7	41.2	38.1
KCF20T-20N	1-1/4"	32	1-1/4"	1 5/8"-12	37.5	81.7	63.2	50.8	50.8
KCF24T-24N	1-1/2"	38	1-1/2"	1 7/8"-12	33.0	93.2	66.5	60.3	57.1
KCF32T-32N	2"	50	2"	2 1/2"-12	45.0	102.9	75.4	73.0	73.0

Bulkhead Female Connector

KCBF

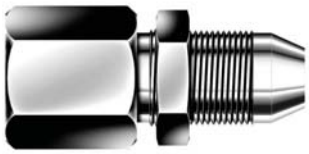

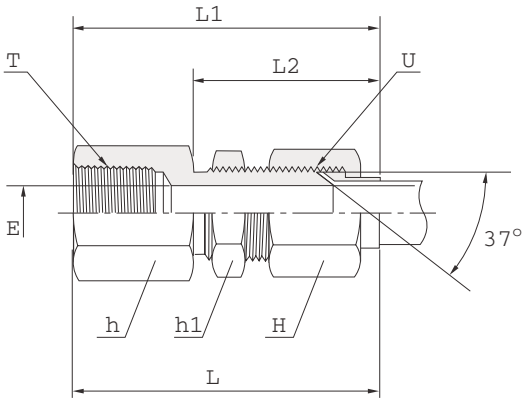

Tube to Female Pipe

Part No.	Tube O.D		T (NPT)	U (UNF)	E	L	L1	L2	h (HEX)	h1 (HEX)	H (HEX)
	Inch	Metric									
KCBF2T-2N	1/8"	3	1/8"	5/16"-24	1.6	49.0	41.2	28.2	14.2	14.2	9.5
KCBF3T-2N	3/16"	4	1/8"	3/8"-24	3.2	50.6	41.2	28.2	14.2	15.8	11.0
KCBF4T-2N	1/4"	6	1/8"	7/16"-20	4.4	52.6	43.5	30.5	14.2	17.4	14.2
KCBF5T-2N	5/16"	8	1/8"	1/2"-20	6.0	53.9	43.5	30.5	14.2	19.0	15.8
KCBF6T-4N	3/8"	10	1/4"	9/16"-18	7.5	62.5	50.5	32.5	19.0	20.6	17.4
KCBF8T-6N	1/2"	12	3/8"	3/4"-16	9.9	69.3	56.6	36.6	22.2	25.4	22.2
KCBF10T-8N	5/8"	16	1/2"	7/8"-14	12.3	82.7	66.1	40.1	29.0	28.5	25.4
KCBF12T-12N	3/4"	18, 20	3/4"	1 1/16"-12	15.5	86.0	71.4	44.4	34.9	34.9	31.7
KCBF14T-12N	7/8"	22	3/4"	1 3/16"-12	18.0	89.0	71.4	44.4	34.9	38.1	34.9
KCBF16T-16N	1"	25	1"	1 5/16"-12	21.5	94.4	75.4	44.4	41.2	41.2	38.1
KCBF20T-20N	1-1/4"	32	1-1/4"	1 5/8"-12	27.5	99.2	80.7	45.7	50.8	47.6	50.8
KCBF24T-24N	1-1/2"	38	1-1/2"	1 7/8"-12	33.0	107.7	81.0	46.0	60.0	53.9	57.1
KCBF32T-32N	2"	50	2"	2 1/2"-12	45.0	120.6	93.1	53.1	73.0	69.8	73.0

Female Elbow

KLF

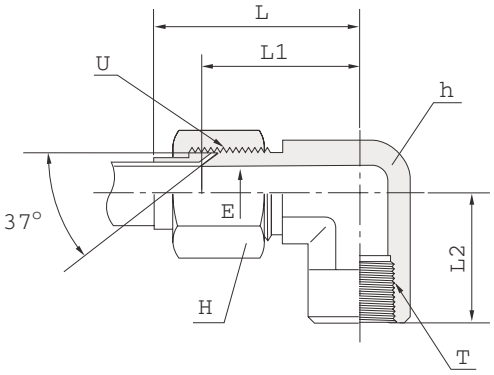

Tube to Female Pipe

Part No.	Tube O.D		T (NPT)	U (UNF)	E	L	L1	L2	h (HEX)	H (HEX)
	Inch	Metric								
KLF2T-2N	1/8"	3	1/8"	5/16"-24	1.6	33.2	25.4	16.8	14.3	9.5
KLF3T-2N	3/16"	4	1/8"	3/8"-24	3.2	35.6	26.2	16.8	14.3	11.0
KLF4T-2N	1/4"	6	1/8"	7/16"-20	4.4	36.5	27.4	16.8	14.3	14.2
KLF5T-2N	5/16"	8	1/8"	1/2"-20	6.0	37.8	27.4	16.8	14.3	16.0
KLF6T-4N	3/8"	10	1/4"	9/16"-18	7.5	43.1	31.2	22.4	19.0	17.4
KLF8T-6N	1/2"	12	3/8"	3/4"-16	9.9	48.8	36.1	25.9	22.2	22.2
KLF10T-8N	5/8"	16	1/2"	7/8"-14	12.3	58.3	41.7	31.2	27.0	25.4
KLF12T-12N	3/4"	18, 20	3/4"	1 1/16"-12	15.5	63.5	48.0	34.5	33.3	32.0
KLF14T-12N	7/8"	22	3/4"	1 3/16"-12	18.0	64.8	47.2	36.1	33.3	35.0
KLF16T-16N	1"	25	1"	1 5/16"-12	21.5	74.1	55.1	41.1	41.3	38.0
KLF20T-20N	1-1/4"	32	1-1/4"	1 5/8"-12	37.5	77.7	59.2	43.2	47.6	50.8
KLF24T-24N	1-1/2"	38	1-1/2"	1 7/8"-12	33.0	100.1	73.4	52.8	65.1	57.0
KLF32T-32N	2"	50	2"	2 1/2"-12	45.0	111.3	83.8	60.7	71.4	73.0

Female Run Tee

KTRF

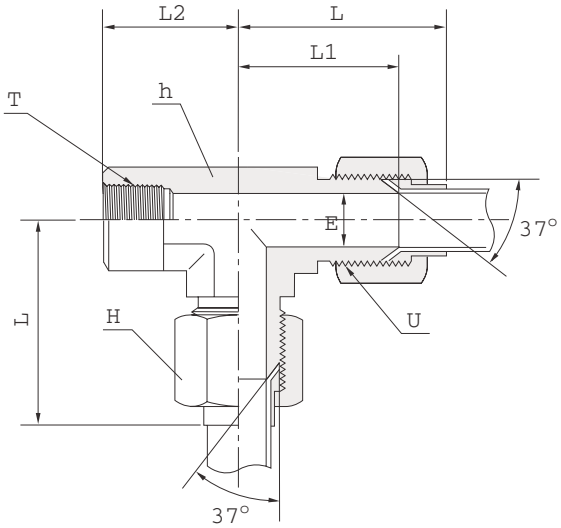

Tube to Female Pipe

Part No.	Tube O.D		T (NPT)	U (UNF)	E	L	L1	L2	h (HEX)	H (HEX)
	Inch	Metric								
KTRF2T-2N	1/8"	3	1/8"	5/16"-24	1.6	33.2	25.4	16.8	14.3	9.5
KTRF3T-2N	3/16"	4	1/8"	3/8"-24	3.2	35.6	26.2	16.8	14.3	11.0
KTRF4T-2N	1/4"	6	1/8"	7/16"-20	4.4	36.5	27.4	16.8	14.3	14.2
KTRF5T-2N	5/16"	8	1/8"	1/2"-20	6.0	37.8	27.4	16.8	14.3	16.0
KTRF6T-4N	3/8"	10	1/4"	9/16"-18	7.5	43.1	31.2	22.4	19.0	17.4
KTRF8T-6N	1/2"	12	3/8"	3/4"-16	9.9	48.8	36.1	25.9	22.2	22.2
KTRF10T-8N	5/8"	16	1/2"	7/8"-14	12.3	58.3	41.7	31.2	27.0	25.4
KTRF12T-12N	3/4"	18, 20	3/4"	1 1/16"-12	15.5	63.5	48.0	34.5	33.3	32.0
KTRF14T-12N	7/8"	22	3/4"	1 3/16"-12	18.0	64.8	47.2	36.1	33.3	35.0
KTRF16T-16N	1"	25	1"	1 5/16"-12	21.5	74.1	55.1	41.1	41.3	38.0
KTRF20T-20N	1-1/4"	32	1-1/4"	1 5/8"-12	37.5	77.7	59.2	43.2	47.6	50.8
KTRF24T-24N	1-1/2"	38	1-1/2"	1 7/8"-12	33.0	100.1	73.4	52.8	65.1	57.0
KTRF32T-32N	2"	50	2"	2 1/2"-12	45.0	111.3	83.8	60.7	71.4	73.0

Female Branch Tee

KTBF

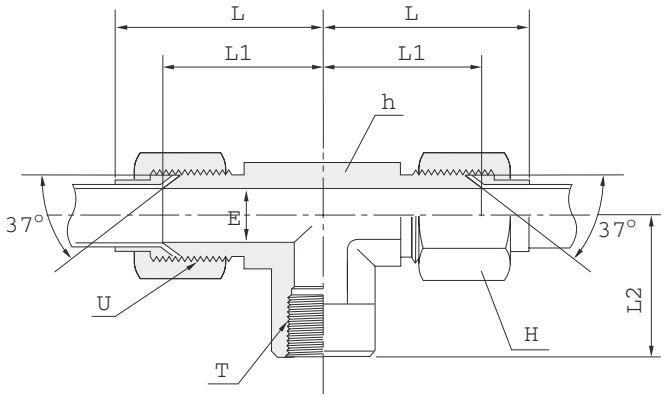

Tube to Female Pipe

Part No.	Tube O.D		T (NPT)	U (UNF)	E	L	L1	L2	h (HEX)	H (HEX)
	Inch	Metric								
KTBF2T-2N	1/8"	3	1/8"	5/16"-24	1.6	33.2	25.4	16.8	14.3	9.5
KTBF3T-2N	3/16"	4	1/8"	3/8"-24	3.2	35.6	26.2	16.8	14.3	11.0
KTBF4T-2N	1/4"	6	1/8"	7/16"-20	4.4	36.5	27.4	16.8	14.3	14.2
KTBF5T-2N	5/16"	8	1/8"	1/2"-20	6.0	37.8	27.4	16.8	14.3	16.0
KTBF6T-4N	3/8"	10	1/4"	9/16"-18	7.5	43.1	31.2	22.4	19.0	17.4
KTBF8T-6N	1/2"	12	3/8"	3/4"-16	9.9	48.8	36.1	25.9	22.2	22.2
KTBF10T-8N	5/8"	16	1/2"	7/8"-14	12.3	58.3	41.7	31.2	27.0	25.4
KTBF12T-12N	3/4"	18, 20	3/4"	1 1/16"-12	15.5	63.5	48.0	34.5	33.3	32.0
KTBF14T-12N	7/8"	22	3/4"	1 3/16"-12	18.0	64.8	47.2	36.1	33.3	35.0
KTBF16T-16N	1"	25	1"	1 5/16"-12	21.5	74.1	55.1	41.1	41.3	38.0
KTBF20T-20N	1-1/4"	32	1-1/4"	1 5/8"-12	37.5	77.7	59.2	43.2	47.6	50.8
KTBF24T-24N	1-1/2"	38	1-1/2"	1 7/8"-12	33.0	100.1	73.4	52.8	65.1	57.0
KTBF32T-32N	2"	50	2"	2 1/2"-12	45.0	111.3	83.8	60.7	71.4	73.0

O-Seal G Male Connector

KMC-GO

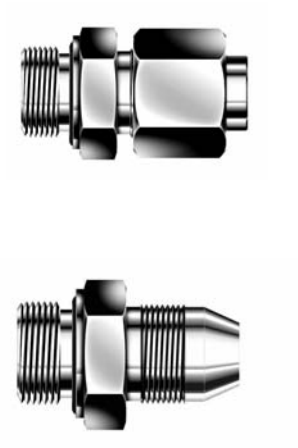

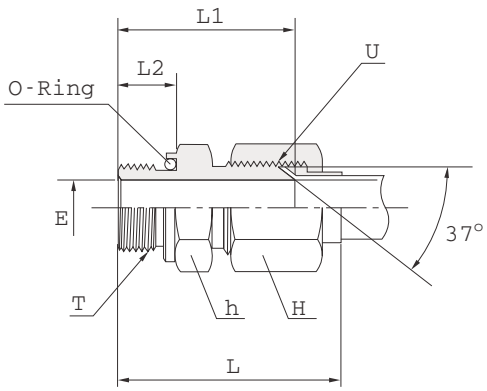

Tube to Straight Thread

Part No.	Tube O.D		T (PF)	U (UNF)	E	L	L1	L2	h (HEX)	H (HEX)
	Inch	Metric								
KMC2T-2GO	1/8"	3	1/8"	5/16"-24	1.6	35.3	27.5	8.0	11.1	9.5
KMC3T-2GO	3/16"	4	1/8"	3/8"-24	3.2	37.9	28.5	8.0	12.7	11.0
KMC4T-2GO	1/4"	6	1/8"	7/16"-20	4.4	39.3	30.2	8.0	14.2	14.2
KMC5T-2GO	5/16"	8	1/8"	1/2"-20	6.0	40.6	30.2	8.0	15.8	16.0
KMC6T-4GO	3/8"	10	1/4"	9/16"-18	7.5	46.9	35.0	12.0	17.4	17.4
KMC8T-6GO	1/2"	12	3/8"	3/4"-16	9.9	51.4	38.7	12.0	22.2	22.2
KMC10T-8GO	5/8"	16	1/2"	7/8"-14	12.3	61.1	44.5	14.0	25.4	25.4
KMC12T-12GO	3/4"	18, 20	3/4"	1 1/16"-12	15.5	66.4	50.9	16.0	31.7	32.0
KMC14T-12GO	7/8"	22	3/4"	1 3/16"-12	18.0	69.0	51.4	16.0	34.9	35.0
KMC16T-16GO	1"	25	1"	1 5/16"-12	21.5	71.7	52.7	18.0	38.0	38.0
KMC20T-20GO	1-1/4"	32	1-1/4"	1 5/8"-12	37.5	78.5	60.0	20.0	42.8	50.8
KMC24T-24GO	1-1/2"	38	1-1/2"	1 7/8"-12	33.0	92.8	66.1	21.0	55.0	57.0
KMC32T-32GO	2"	50	2"	2 1/2"-12	45.0	108.0	80.5	25.0	70.0	73.0

O-Seal UNF Male Connector

KMCS-U

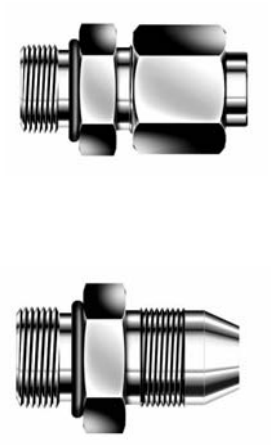

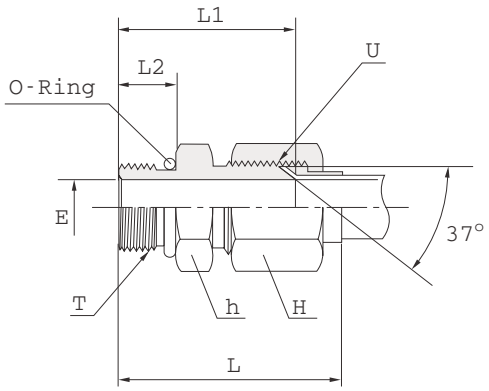

Tube to Straight Thread

Part No.	Tube O.D		T (UNF)	U (UNF)	E	L	L1	L2	h (HEX)	H (HEX)
	Inch	Metric								
KMCS2T-02U	1/8"	3	5/16"-24	5/16"-24	1.6	34.7	26.9	7.5	11.1	9.5
KMCS3T-03U	3/16"	4	3/8"-24	3/8"-24	3.2	37.3	27.9	7.5	12.7	11.0
KMCS4T-04U	1/4"	6	7/16"-20	7/16"-20	4.4	40.3	31.2	9.1	14.2	14.2
KMCS5T-05U	5/16"	8	1/2"-20	1/2"-20	6.0	41.6	31.2	9.1	15.8	16.0
KMCS6T-06U	3/8"	10	9/16"-18	9/16"-18	7.5	44.9	33.0	9.9	17.4	17.4
KMCS8T-08U	1/2"	12	3/4"-16	3/4"-16	9.9	50.3	37.6	11.1	22.2	22.2
KMCS10T-10U	5/8"	16	7/8"-14	7/8"-14	12.3	59.8	43.2	12.7	25.4	25.4
KMCS12T-12U	3/4"	18, 20	1 1/16"-12	1 1/16"-12	15.5	65.5	50.0	15.1	31.7	32.0
KMCS14T-14U	7/8"	22	1 3/16"-12	1 3/16"-12	18.0	68.1	50.5	15.1	34.9	35.0
KMCS16T-16U	1"	25	1 5/16"-12	1 5/16"-12	21.5	70.8	51.8	15.1	38.1	38.0
KMCS20T-20U	1-1/4"	32	1 5/8"-12	1 5/8"-12	37.5	73.6	55.1	15.1	47.6	50.8
KMCS24T-24U	1-1/2"	38	1 7/8"-12	1 7/8"-12	33.0	86.9	60.2	15.1	53.9	57.0
KMCS32T-32U	2"	50	2 1/2"-12	2 1/2"-12	45.0	98.1	70.6	15.1	69.8	73.0

O-Seal UNF Male Elbow

KLS-UP

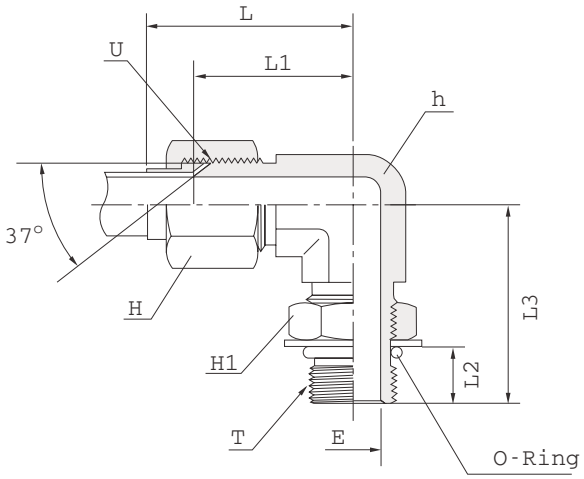

Tube to Straight Thread

Part No.	Tube O.D		T (UNF)	U (UNF)	E	L	L1	L2	L3	h (HEX)	H (HEX)	H1 (HEX)
	Inch	Metric										
KLS2T-02UP	1/8"	3	5/16"-24	5/16"-24	1.6	27.4	19.6	8.4	23.9	11.1	9.5	14.2
KLS3T-03UP	3/16"	4	3/8"-24	3/8"-24	3.2	30.5	21.1	8.4	23.9	11.1	11.0	15.8
KLS4T-04UP	1/4"	6	7/16"-20	7/16"-20	4.4	31.7	22.6	9.8	26.2	11.1	14.2	17.4
KLS5T-05UP	5/16"	8	1/2"-20	1/2"-20	6.0	34.5	24.1	9.8	28.7	14.3	16.0	19.0
KLS6T-06UP	3/8"	10	9/16"-18	9/16"-18	7.5	38.8	26.9	9.9	31.8	14.3	17.4	20.6
KLS8T-08UP	1/2"	12	3/4"-16	3/4"-16	9.9	44.5	31.8	11.0	36.8	19.0	22.2	25.4
KLS10T-10UP	5/8"	16	7/8"-14	7/8"-14	12.3	53.4	36.8	12.5	43.2	22.2	25.4	28.5
KLS12T-12UP	3/4"	18, 20	1 1/16"-12	1 1/16"-12	15.5	57.7	42.2	16.5	49.3	27.0	32.0	34.9
KLS14T-14UP	7/8"	22	1 3/16"-12	1 3/16"-12	18.0	63.3	45.7	16.5	50.8	33.3	35.0	38.1
KLS16T-16UP	1"	25	1 5/16"-12	1 5/16"-12	21.5	65.0	46.0	16.5	52.1	33.3	38.0	41.2
KLS20T-20UP	1-1/4"	32	1 5/8"-12	1 5/8"-12	37.5	70.8	52.3	16.5	57.2	41.3	50.8	47.6
KLS24T-24UP	1-1/2"	38	1 7/8"-12	1 7/8"-12	33.0	85.9	59.2	16.5	60.7	47.6	57.0	53.9
KLS32T-32UP	2"	50	2 1/2"-12	2 1/2"-12	45.0	105.2	77.7	16.5	73.4	63.5	73.0	69.8

O-Seal 45° UNF Male Elbow

KLBS-UP

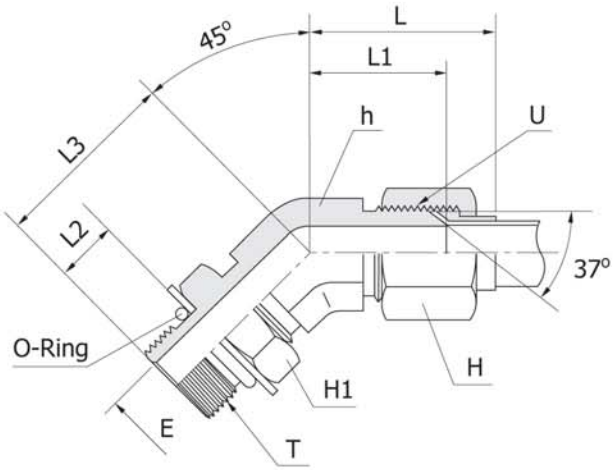

Tube to Straight Thread

Part No.	Tube O.D		T (UNF)	U (UNF)	E	L	L1	L2	L3	h (HEX)	H (HEX)	H1 (HEX)
	Inch	Metric										
KLBS2T-02UP	1/8"	3	5/16"-24	5/16"-24	1.6	25.3	17.5	8.4	23.9	11.1	9.5	14.2
KLBS3T-03UP	3/16"	4	3/8"-24	3/8"-24	3.2	26.9	17.5	8.4	23.9	11.1	11.0	15.8
KLBS4T-04UP	1/4"	6	7/16"-20	7/16"-20	4.4	27.4	18.3	9.8	23.9	11.1	14.2	17.4
KLBS5T-05UP	5/16"	8	1/2"-20	1/2"-20	6.0	30.0	19.6	9.8	25.4	14.3	16.0	19.0
KLBS6T-06UP	3/8"	10	9/16"-18	9/16"-18	7.5	33.0	21.1	9.9	28.4	14.3	17.4	20.6
KLBS8T-08UP	1/2"	12	3/4"-16	3/4"-16	9.9	37.6	24.9	11.0	32.5	19.0	22.2	25.4
KLBS10T-10UP	5/8"	16	7/8"-14	7/8"-14	12.3	44.8	28.2	12.5	36.6	22.2	25.4	28.5
KLBS12T-12UP	3/4"	18, 20	1 1/16"-12	1 1/16"-12	15.5	48.0	32.5	16.5	43.9	27.0	32.0	34.9
KLBS14T-14UP	7/8"	22	1 3/16"-12	1 3/16"-12	18.0	54.4	36.8	16.5	45.7	33.3	35.0	38.1
KLBS16T-16UP	1"	25	1 5/16"-12	1 5/16"-12	21.5	56.3	37.3	16.5	47.2	33.3	38.0	41.2
KLBS20T-20UP	1-1/4"	32	1 5/8"-12	1 5/8"-12	37.5	58.9	40.4	16.5	48.5	41.3	50.8	47.6
KLBS24T-24UP	1-1/2"	38	1 7/8"-12	1 7/8"-12	33.0	71.9	45.2	16.5	48.5	47.6	57.0	53.9
KLBS32T-32UP	2"	50	2 1/2"-12	2 1/2"-12	45.0	83.9	56.4	16.5	47.2	63.5	73.0	69.8

O-Seal UNF Branch Tee

KTBS-UP

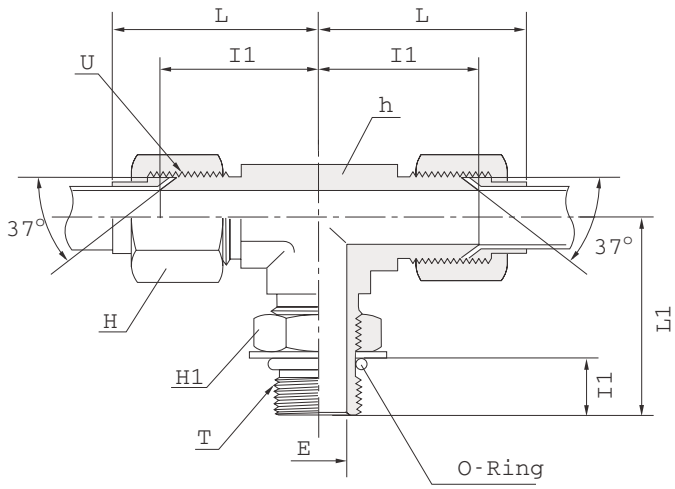

Tube to Straight Thread

Part No.	Tube O.D		T (UNF)	U (UNF)	E	L	L1	I	I1	h (HEX)	H (HEX)	H1 (HEX)
	Inch	Metric										
KTBS2T-02UP	1/8"	3	5/16"-24	5/16"-24	1.6	27.4	23.9	19.6	8.4	11.1	9.5	14.2
KTBS3T-03UP	3/16"	4	3/8"-24	3/8"-24	3.2	30.5	23.9	21.1	8.4	11.1	11.0	15.8
KTBS4T-04UP	1/4"	6	7/16"-20	7/16"-20	4.4	31.7	26.2	22.6	9.8	11.1	14.2	17.4
KTBS5T-05UP	5/16"	8	1/2"-20	1/2"-20	6.0	34.5	28.7	24.1	9.8	14.3	16.0	19.0
KTBS6T-06UP	3/8"	10	9/16"-18	9/16"-18	7.5	38.8	31.8	26.9	9.9	14.3	17.4	20.6
KTBS8T-08UP	1/2"	12	3/4"-16	3/4"-16	9.9	44.5	36.8	31.8	11.0	19.0	22.2	25.4
KTBS10T-10UP	5/8"	16	7/8"-14	7/8"-14	12.3	53.4	43.2	36.8	12.5	22.2	25.4	28.5
KTBS12T-12UP	3/4"	18, 20	1 1/16"-12	1 1/16"-12	15.5	57.7	49.3	42.2	16.5	27.0	32.0	34.9
KTBS14T-14UP	7/8"	22	1 3/16"-12	1 3/16"-12	18.0	63.3	50.8	45.7	16.5	33.3	35.0	38.1
KTBS16T-16UP	1"	25	1 5/16"-12	1 5/16"-12	21.5	65.0	52.1	46.0	16.5	33.3	38.0	41.2
KTBS20T-20UP	1-1/4"	32	1 5/8"-12	1 5/8"-12	37.5	70.8	57.2	52.3	16.5	41.3	50.8	47.6
KTBS24T-24UP	1-1/2"	38	1 7/8"-12	1 7/8"-12	33.0	85.9	60.7	59.2	16.5	47.6	57.0	53.9
KTBS32T-32UP	2"	50	2 1/2"-12	2 1/2"-12	45.0	105.2	73.4	77.7	16.5	63.5	73.0	69.8

O-Seal UNF Run Tee

KTRS-UP

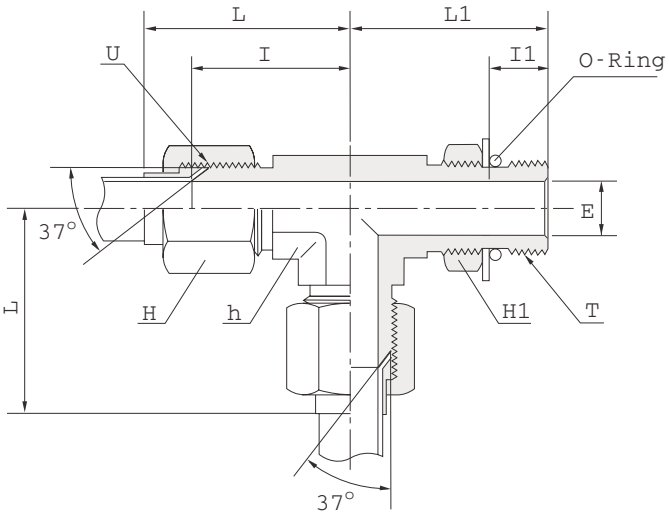

Tube to Straight Thread

Part No.	Tube O.D		T (UNF)	U (UNF)	E	L	L1	I	I1	h (HEX)	H (HEX)	H1 (HEX)
	Inch	Metric										
KTRS2T-02UP	1/8"	3	5/16"-24	5/16"-24	1.6	27.4	23.9	19.6	8.4	11.1	9.5	14.2
KTRS3T-03UP	3/16"	4	3/8"-24	3/8"-24	3.2	30.5	23.9	21.1	8.4	11.1	11.0	15.8
KTRS4T-04UP	1/4"	6	7/16"-20	7/16"-20	4.4	31.7	26.2	22.6	9.8	11.1	14.2	17.4
KTRS5T-05UP	5/16"	8	1/2"-20	1/2"-20	6.0	34.5	28.7	24.1	9.8	14.3	16.0	19.0
KTRS6T-06UP	3/8"	10	9/16"-18	9/16"-18	7.5	38.8	31.8	26.9	9.9	14.3	17.4	20.6
KTRS8T-08UP	1/2"	12	3/4"-16	3/4"-16	9.9	44.5	36.8	31.8	11.0	19.0	22.2	25.4
KTRS10T-10UP	5/8"	16	7/8"-14	7/8"-14	12.3	53.4	43.2	36.8	12.5	22.2	25.4	28.5
KTRS12T-12UP	3/4"	18, 20	1 1/16"-12	1 1/16"-12	15.5	57.7	49.3	42.2	16.5	27.0	32.0	34.9
KTRS14T-14UP	7/8"	22	1 3/16"-12	1 3/16"-12	18.0	63.3	50.8	45.7	16.5	33.3	35.0	38.1
KTRS16T-16UP	1"	25	1 5/16"-12	1 5/16"-12	21.5	65.0	52.1	46.0	16.5	33.3	38.0	41.2
KTRS20T-20UP	1-1/4"	32	1 5/8"-12	1 5/8"-12	37.5	70.8	57.2	52.3	16.5	41.3	50.8	47.6
KTRS24T-24UP	1-1/2"	38	1 7/8"-12	1 7/8"-12	33.0	85.9	60.7	59.2	16.5	47.6	57.0	53.9
KTRS32T-32UP	2"	50	2 1/2"-12	2 1/2"-12	45.0	105.2	73.4	77.7	16.5	63.5	73.0	69.8

Swivel Male Connector

KSMC

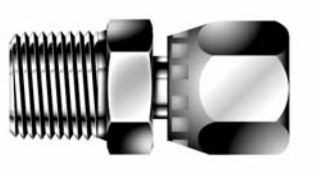

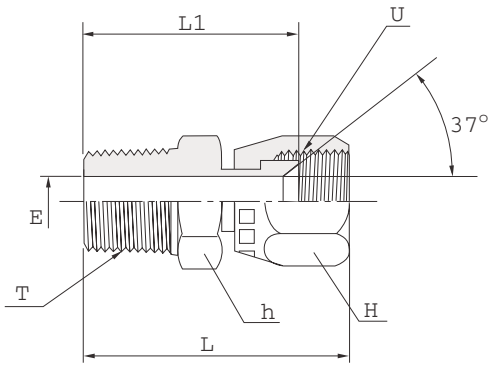

Swivel Fittings

Part No.	Tube O.D		T (NPT)	U (UNF)	E	L	L1	h (HEX)	H (HEX)
	Inch	Metric							
KSMC2T-2N	1/8"	3	1/8"	5/16"-24	1.6	30.0	22.0	11.1	11.1
KSMC3T-2N	3/16"	4	1/8"	3/8"-24	3.2	32.0	23.5	11.1	12.7
KSMC4T-2N	1/4"	6	1/8"	7/16"-20	4.4	34.2	25.5	12.7	14.2
KSMC5T-2N	5/16"	8	1/8"	1/2"-20	6.0	35.0	25.5	14.2	16.0
KSMC6T-4N	3/8"	10	1/4"	9/16"-18	7.5	40.2	30.7	16.0	17.4
KSMC8T-6N	1/2"	12	3/8"	3/4"-16	9.9	42.7	32.0	21.0	22.2
KSMC10T-8N	5/8"	16	1/2"	7/8"-14	12.3	51.3	38.6	23.8	25.4
KSMC12T-12N	3/4"	18, 20	3/4"	1 1/16"-12	15.5	54.5	40.2	29.0	32.0
KSMC14T-12N	7/8"	22	3/4"	1 3/16"-12	18.0	56.0	41.2	32.0	35.0
KSMC16T-16N	1"	25	1"	1 5/16"-12	21.5	63.7	48.6	36.0	38.0
KSMC20T-20N	1-1/4"	32	1-1/4"	1 5/8"-12	37.5	68.9	53.0	46.0	50.8
KSMC24T-24N	1-1/2"	38	1-1/2"	1 7/8"-12	33.0	77.6	59.0	50.0	57.0
KSMC32T-32N	2"	50	2"	2 1/2"-12	45.0	92.9	69.1	66.7	73.0

Swivel UNF Male Connector

KSMCS-U

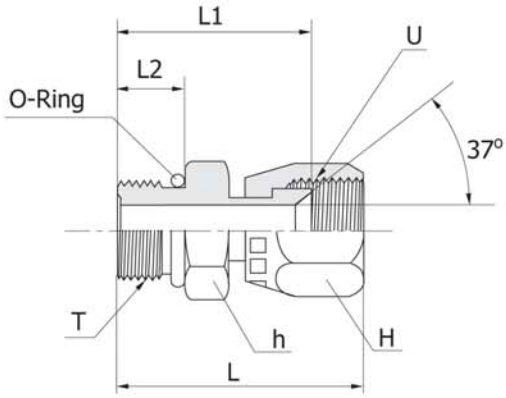

Swivel Fittings

Part No.	Tube O.D		T (UNF)	U (UNF)	L	L1	L2	h (HEX)	H (HEX)
	Inch	Metric							
KSMCS-2T-02U	1/8"	3	5/16"-24	5/16"-24	30.4	22.5	7.5	11.1	11.1
KSMCS-3T-02U	3/16"	4	3/8"-24	3/8"-24	31.0	22.7	7.5	12.7	12.7
KSMCS-4T-04U	1/4"	6	7/16"-20	7/16"-20	33.9	25.2	9.1	14.2	14.2
KSMCS-5T-05U	5/16"	8	1/2"-20	1/2"-20	35.7	26.2	9.1	15.8	15.8
KSMCS-6T-06U	3/8"	10	9/16"-18	9/16"-18	37.4	27.9	9.9	17.4	19.0
KSMCS-8T-08U	1/2"	12	3/4"-16	3/4"-16	41.6	30.9	11.1	22.2	22.2
KSMCS-10T-10U	5/8"	16	7/8"-14	7/8"-14	47.6	34.9	12.7	25.4	27.0
KSMCS-12T-12U	3/4"	18, 20	1 1/16"-12	1 1/16"-12	54.4	40.1	15.1	31.8	32.0
KSMCS-14T-14U	7/8"	22	1 3/16"-12	1 3/16"-12	55.6	40.9	15.1	34.9	34.9
KSMCS-16T-16U	1"	25	1 5/16"-12	1 5/16"-12	56.8	41.7	15.1	38.1	38.1
KSMCS-20T-20U	1-1/4"	32	1 5/8"-12	1 5/8"-12	63.2	47.3	15.1	47.6	50.8
KSMCS-24T-24U	1-1/2"	38	1 7/8"-12	1 7/8"-12	71.3	52.7	15.1	54.0	60.0
KSMCS-32T-32U	2"	50	2 1/2"-12	2 1/2"-12	72.5	58.7	15.1	70.0	73.0

Swivel Female Connector

KSCF

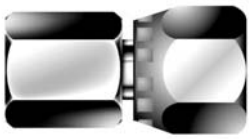

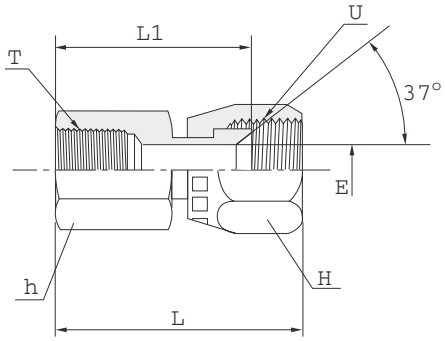

Swivel Fittings

Part No.	Tube O.D		T (NPT)	U (UNF)	E	L	L1	h (HEX)	H (HEX)
	Inch	Metric							
KSCF2T-2N	1/8"	3	1/8"	5/16"-24	1.6	36.1	28.2	14.2	11.1
KSCF3T-2N	3/16"	4	1/8"	3/8"-24	3.2	37.3	29.0	14.2	12.7
KSCF4T-2N	1/4"	6	1/8"	7/16"-20	4.4	39.7	31.0	14.2	14.2
KSCF5T-2N	5/16"	8	1/8"	1/2"-20	6.0	40.5	31.0	14.2	16.0
KSCF6T-4N	3/8"	10	1/4"	9/16"-18	7.5	45.8	36.3	19.0	17.4
KSCF8T-6N	1/2"	12	3/8"	3/4"-16	9.9	47.0	38.9	22.2	22.2
KSCF10T-8N	5/8"	16	1/2"	7/8"-14	12.3	51.6	48.0	29.0	25.4
KSCF12T-12N	3/4"	18, 20	3/4"	1 1/16"-12	15.5	66.6	52.3	35.0	32.0
KSCF14T-12N	7/8"	22	3/4"	1 3/16"-12	18.0	67.8	53.1	35.0	35.0
KSCF16T-16N	1"	25	1"	1 5/16"-12	21.5	73.5	58.4	41.0	38.0
KSCF20T-20N	1-1/4"	32	1-1/4"	1 5/8"-12	37.5	78.1	62.2	50.8	50.8
KSCF24T-24N	1-1/2"	38	1-1/2"	1 7/8"-12	33.0	86.7	68.1	60.0	57.0
KSCF32T-32N	2"	50	2"	2 1/2"-12	45.0	89.3	65.5	73.0	73.0

Swivel Elbow

KSL

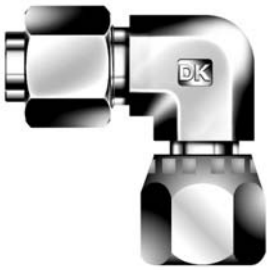

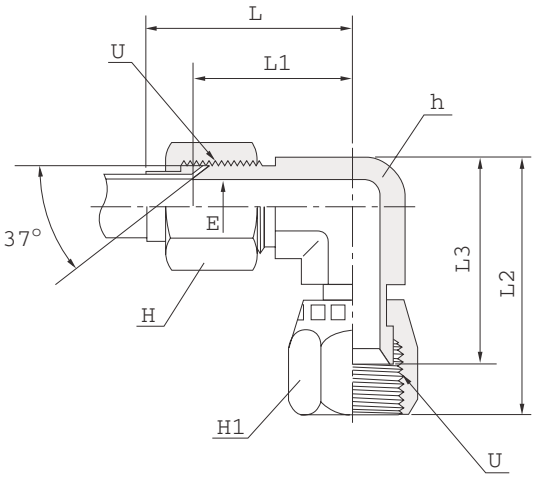

Swivel Fittings

Part No.	Tube O.D		U (UNF)	E	L	L1	L2	L3	h (HEX)	H (HEX)	H1 (HEX)
	Inch	Metric									
KSL-2T	1/8"	3	5/16"-24	1.6	27.4	19.6	24.6	16.7	11.1	9.5	11.1
KSL-3T	3/16"	4	3/8"-24	3.2	30.5	21.1	25.4	17.1	11.1	11.0	12.7
KSL-4T	1/4"	6	7/16"-20	4.4	31.7	22.6	25.4	16.7	11.1	14.2	14.2
KSL-5T	5/16"	8	1/2"-20	6.0	34.5	24.1	26.9	17.4	14.3	16.0	15.8
KSL-6T	3/8"	10	9/16"-18	7.5	38.8	26.9	31.8	22.3	14.3	17.4	17.4
KSL-8T	1/2"	12	3/4"-16	9.9	44.5	31.8	35.1	24.4	19.0	22.2	22.2
KSL-10T	5/8"	16	7/8"-14	12.3	53.4	36.8	41.1	28.4	22.2	25.4	25.4
KSL-12T	3/4"	18, 20	1 1/16"-12	15.5	57.7	42.2	44.4	30.1	27.0	32.0	31.7
KSL-14T	7/8"	22	1 3/16"-12	18.0	63.3	45.7	45.2	30.5	33.3	35.0	34.9
KSL-16T	1"	25	1 5/16"-12	21.5	65.0	46.0	50.8	35.7	33.3	38.0	38.1
KSL-20T	1-1/4"	32	1 5/8"-12	37.5	70.8	52.3	58.7	42.8	41.3	50.8	50.8
KSL-24T	1-1/2"	38	1 7/8"-12	33.0	85.9	59.2	65.8	47.2	47.6	57.1	57.1
KSL-32T	2"	50	2 1/2"-12	45.0	105.2	77.7	85.9	62.1	63.5	73.0	69.8

Swivel Run Tee

KSRT

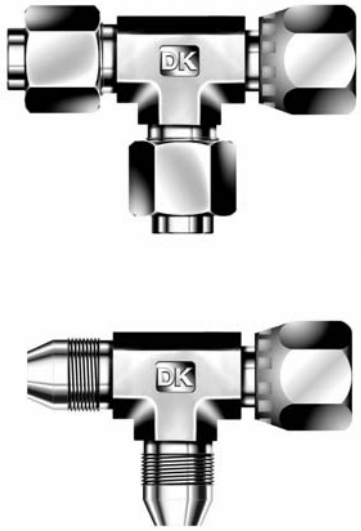

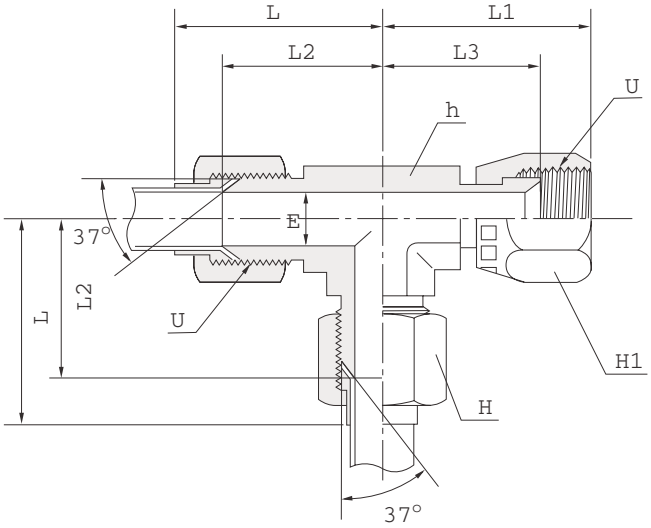

Swivel Fittings

Part No.	Tube O.D		U (UNF)	E	L	L1	L2	L3	h (HEX)	H (HEX)	H1 (HEX)
	Inch	Metric									
KSRT-2T	1/8"	3	5/16"-24	1.6	27.4	24.6	19.6	16.7	11.1	9.5	11.1
KSRT-3T	3/16"	4	3/8"-24	3.2	30.5	25.4	21.1	17.1	11.1	11.0	12.7
KSRT-4T	1/4"	6	7/16"-20	4.4	31.7	25.4	22.6	16.7	11.1	14.2	14.2
KSRT-5T	5/16"	8	1/2"-20	6.0	34.5	26.9	24.1	17.4	14.3	16.0	15.8
KSRT-6T	3/8"	10	9/16"-18	7.5	38.8	31.8	26.9	22.3	14.3	17.4	17.4
KSRT-8T	1/2"	12	3/4"-16	9.9	44.5	35.1	31.8	24.4	19.0	22.2	22.2
KSRT-10T	5/8"	16	7/8"-14	12.3	53.4	41.1	36.8	28.4	22.2	25.4	25.4
KSRT-12T	3/4"	18, 20	1 1/16"-12	15.5	57.7	44.4	42.2	30.1	27.0	32.0	31.7
KSRT-14T	7/8"	22	1 3/16"-12	18.0	63.3	45.2	45.7	30.5	33.3	35.0	34.9
KSRT-16T	1"	25	1 5/16"-12	21.5	65.0	50.8	46.0	35.7	33.3	38.0	38.1
KSRT-20T	1-1/4"	32	1 5/8"-12	37.5	70.8	58.7	52.3	42.8	41.3	50.8	50.8
KSRT-24T	1-1/2"	38	1 7/8"-12	33.0	85.9	65.8	59.2	47.2	47.6	57.1	57.0
KSRT-32T	2"	50	2 1/2"-12	45.0	105.2	85.9	77.7	62.1	63.5	73.0	69.8

Swivel Branch Tee

KSBT

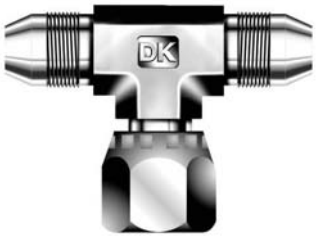

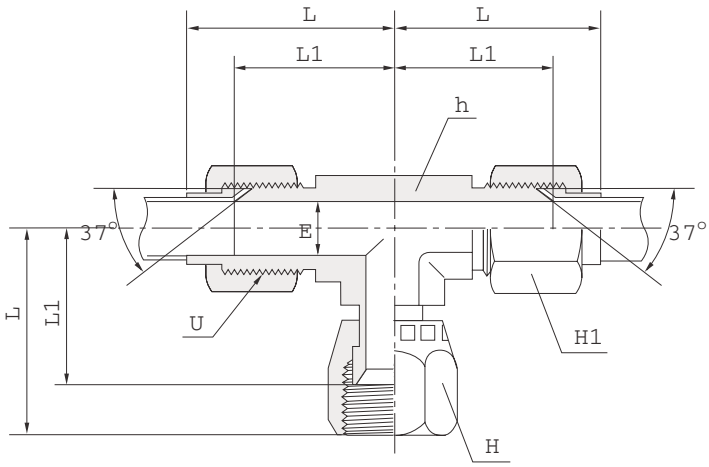

Swivel Fittings

Part No.	Tube O.D		U (UNF)	E	L	L1	L2	L3	h (HEX)	H (HEX)	H1 (HEX)
	Inch	Metric									
KSBT-2T	1/8"	3	5/16"-24	1.6	27.4	24.6	19.6	16.7	11.1	9.5	11.1
KSBT-3T	3/16"	4	3/8"-24	3.2	30.5	25.4	21.1	17.1	11.1	11.0	12.7
KSBT-4T	1/4"	6	7/16"-20	4.4	31.7	25.4	22.6	16.7	11.1	14.2	14.2
KSBT-5T	5/16"	8	1/2"-20	6.0	34.5	26.9	24.1	17.4	14.3	16.0	15.8
KSBT-6T	3/8"	10	9/16"-18	7.5	38.8	31.8	26.9	22.3	14.3	17.4	17.4
KSBT-8T	1/2"	12	3/4"-16	9.9	44.5	35.1	31.8	24.4	19.0	22.2	22.2
KSBT-10T	5/8"	16	7/8"-14	12.3	53.4	41.1	36.8	28.4	22.2	25.4	25.4
KSBT-12T	3/4"	18, 20	1 1/16"-12	15.5	57.7	44.4	42.2	30.1	27.0	32.0	31.7
KSBT-14T	7/8"	22	1 3/16"-12	18.0	63.3	45.2	45.7	30.5	33.3	35.0	34.9
KSBT-16T	1"	25	1 5/16"-12	21.5	65.0	50.8	46.0	35.7	33.3	38.0	38.1
KSBT-20T	1-1/4"	32	1 5/8"-12	37.5	70.8	58.7	52.3	42.8	41.3	50.8	50.8
KSBT-24T	1-1/2"	38	1 7/8"-12	33.0	85.9	65.8	59.2	47.2	47.6	57.1	57.0
KSBT-32T	2"	50	2 1/2"-12	45.0	105.2	85.9	77.7	62.1	63.5	73.0	69.8

Cap for Tube End
KC

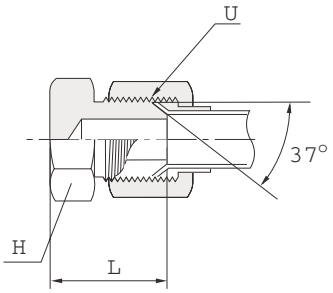

Plug for Fitting Port
KP

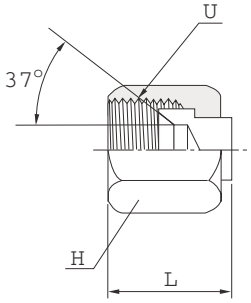

Cap and Plug

Part No.	Tube O.D		U (UNF)	H (HEX)	L
	Inch	Metric			
KC-2T	1/8"	3	5/16"-24	11.1	17.8
KC-3T	3/16"	4	3/8"-24	11.1	18.5
KC-4T	1/4"	6	7/16"-20	12.7	20.3
KC-5T	5/16"	8	1/2"-20	14.2	20.3
KC-6T	3/8"	10	9/16"-18	15.8	21.3
KC-8T	1/2"	12	3/4"-16	20.6	23.9
KC-10T	5/8"	16	7/8"-14	20.6	27.9
KC-12T	3/4"	18, 20	1 1/16"-12	28.5	32.5
KC-14T	7/8"	22	1 3/16"-12	31.7	33.3
KC-16T	1"	25	1 5/16"-12	34.9	33.8
KC-20T	1-1/4"	32	1 5/8"-12	42.8	36.8
KC-24T	1-1/2"	38	1 7/8"-12	50.8	41.9
KC-32T	2"	50	2 1/2"-12	66.6	52.1

Cap and Plug

Part No.	Tube O.D		U (UNF)	H (HEX)	L
	Inch	Metric			
KP-2T	1/8"	3	5/16"-24	9.5	13.7
KP-3T	3/16"	4	3/8"-24	11.1	15.2
KP-4T	1/4"	6	7/16"-20	14.2	15.5
KP-5T	5/16"	8	1/2"-20	15.8	17.0
KP-6T	3/8"	10	9/16"-18	17.4	18.3
KP-8T	1/2"	12	3/4"-16	22.2	21.3
KP-10T	5/8"	16	7/8"-14	25.4	24.6
KP-12T	3/4"	18, 20	1 1/16"-12	31.7	25.9
KP-14T	7/8"	22	1 3/16"-12	34.9	27.4
KP-16T	1"	25	1 5/16"-12	38.1	28.4
KP-20T	1-1/4"	32	1 5/8"-12	50.8	31.0
KP-24T	1-1/2"	38	1 7/8"-12	57.1	35.8
KP-32T	2"	50	2 1/2"-12	73.0	44.2

Nut
KN

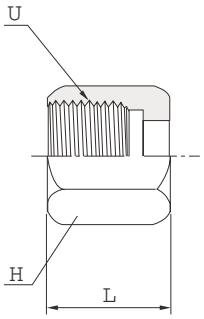

Sleeve
KS

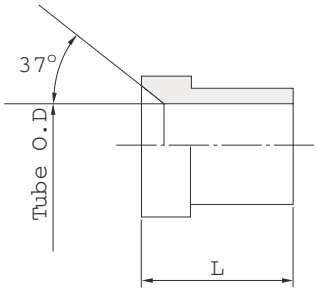

Spare Parts

Part No.	Tube O.D		U (UNF)	H (HEX)	L
	Inch	Metric			
KN-2T	1/8"	3	5/16"-24	9.5	14.0
KN-3T	3/16"	4	3/8"-24	11.1	15.5
KN-4T	1/4"	6	7/16"-20	14.2	15.8
KN-5T	5/16"	8	1/2"-20	15.8	17.3
KN-6T	3/8"	10	9/16"-18	17.4	18.5
KN-8T	1/2"	12	3/4"-16	22.2	21.6
KN-10T	5/8"	16	7/8"-14	25.4	24.9
KN-12T	3/4"	18, 20	1 1/16"-12	31.7	26.2
KN-14T	7/8"	22	1 3/16"-12	34.9	27.7
KN-16T	1"	25	1 5/16"-12	38.1	28.7
KN-20T	1-1/4"	32	1 5/8"-12	50.8	31.2
KN-24T	1-1/2"	38	1 7/8"-12	57.1	36.1
KN-32T	2"	50	2 1/2"-12	73.0	44.5

Spare Parts

Part No.	Tube O.D		L
	Inch	Metric	
KS-2T	1/8"	3	8.6
KS-3T	3/16"	4	8.6
KS-4T	1/4"	6	10.4
KS-5T	5/16"	8	11.2
KS-6T	3/8"	10	12.7
KS-8T	1/2"	12	14.2
KS-10T	5/8"	16	16.8
KS-12T	3/4"	18, 20	17.3
KS-14T	7/8"	22	19.3
KS-16T	1"	25	19.8
KS-20T	1-1/4"	32	23.1
KS-24T	1-1/2"	38	28.4
KS-32T	2"	50	30.2

Bulkhead Lok Nut

KBN

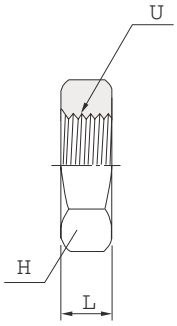

Spare Parts

Part No.	Tube O.D		U (UNF)	L	H (HEX)
	Inch	Metric			
KBN-2T	1/8"	3	5/16"-24	5.6	14.2
KBN-3T	3/16"	4	3/8"-24	5.6	15.8
KBN-4T	1/4"	6	7/16"-20	6.4	17.4
KBN-5T	5/16"	8	1/2"-20	6.4	19.0
KBN-6T	3/8"	10	9/16"-18	6.9	20.6
KBN-8T	1/2"	12	3/4"-16	7.9	25.4
KBN-10T	5/8"	16	7/8"-14	9.1	28.5
KBN-12T	3/4"	18, 20	1 1/16"-12	10.4	34.9
KBN-14T	7/8"	22	1 3/16"-12	10.4	38.1
KBN-16T	1"	25	1 5/16"-12	10.4	41.2
KBN-20T	1-1/4"	32	1 5/8"-12	10.4	47.6
KBN-24T	1-1/2"	38	1 7/8"-12	10.4	53.9
KBN-32T	2"	50	2 1/2"-12	10.4	69.8

DK-LOK Tube Fittings | DK-LOK Valves | DK-LOK Instrumentation Pipe & Weld Fittings

Quality System Certifications

ISO 9001:2000	AP1149
ISO 14001:2004	CL-K-E-1149
OHSMS 18001	HSBSK-S006
API Spec Q1	6D-0593
KEPIC-MN	MN-466
PED 97/23/EC Module D	HSBI-10-11-046
PED 97/23/EC Module H	HSBI-11-03-010
PED 97/23/EC Annex I	07-202-1326WZ-0941/10

Nuclear System and Product Certifications

ASME N	N-3185
ASME NPT	N-3186
ASME NS	N-3342
ASME NB	N-3185

Pressure Equipment Directive 97/23/EC

Module B&D	HSBI-10-11-045

DK-Lok Flange Adapter Leakproof Test per TA Luft requirements

TUV Rheinland	973-10014584

CRN

CRN	0A4788.2
CRN	0C07988.2
CRN	0C09275.2
CRN	0E07988.2
CRN	0C5191.2
CRN	0C07988.2

GOST

GOST	POCC KR.AB28.B02325
GOST	POCC KR.AB28.B02327

Type Approval Certifications

ABS	01-BK218882/3-PDA 09-BK522012-PDA BK720958-X
BV	14034/A1 BV
DNV	P-13044 P-13052
GL	47 924-03HH 47 925-03HH 40 504-01HH 40 505-01HH
KR	CWN80397-PE001
LR	01/10047 01/10048
NK	06FV101B

CNG Certifications

TUV Rheinland : AF-2009-0903-01		TUV SUD : 07-000026-PA-GMB-01
ECE R110	67-01	ECE Regulation NO. 110
ISO 15500-19	15500-15916	ECE Regulation NO. 67-02
ANSI	AGA NGV 3.1-1995,CGA NGV 12.3-M95	Compressed Gaseous Hydrogen (CGH2)
ANSI	AGA NGV 4.1-1999,CSA 125.M99	Liquid Hydrogen(LH2)
Draft ECE Compressed Gaseous Hydrogen Regulation,		
Revision 12b, 10/12/03.		
State of the art		

The information shown in this catalog are not for design purpose, but for reference only.
The accuracy of information is not the liability of our company.

Safe Component Selection

The Selection of component for any applications or system design must be considered to ensure safe performance. Component function, material compatibility, component ratings, proper installation, operation and maintenance remain the sole responsibility of the system designer and the user.
DK Tech accepts no liability for any improper selection, installation, operation or maintenance.

DK Creates Solutions

Head Quarters and Factory
1465, Seobu-ro, Juchon-Myeon, Gimhae-si, South Korea 621-841
Phone : 82) 55-338-0114
Fax : 82) 55-338-6743 / 6744 / 6745 / 6746

DK Tech Corporation