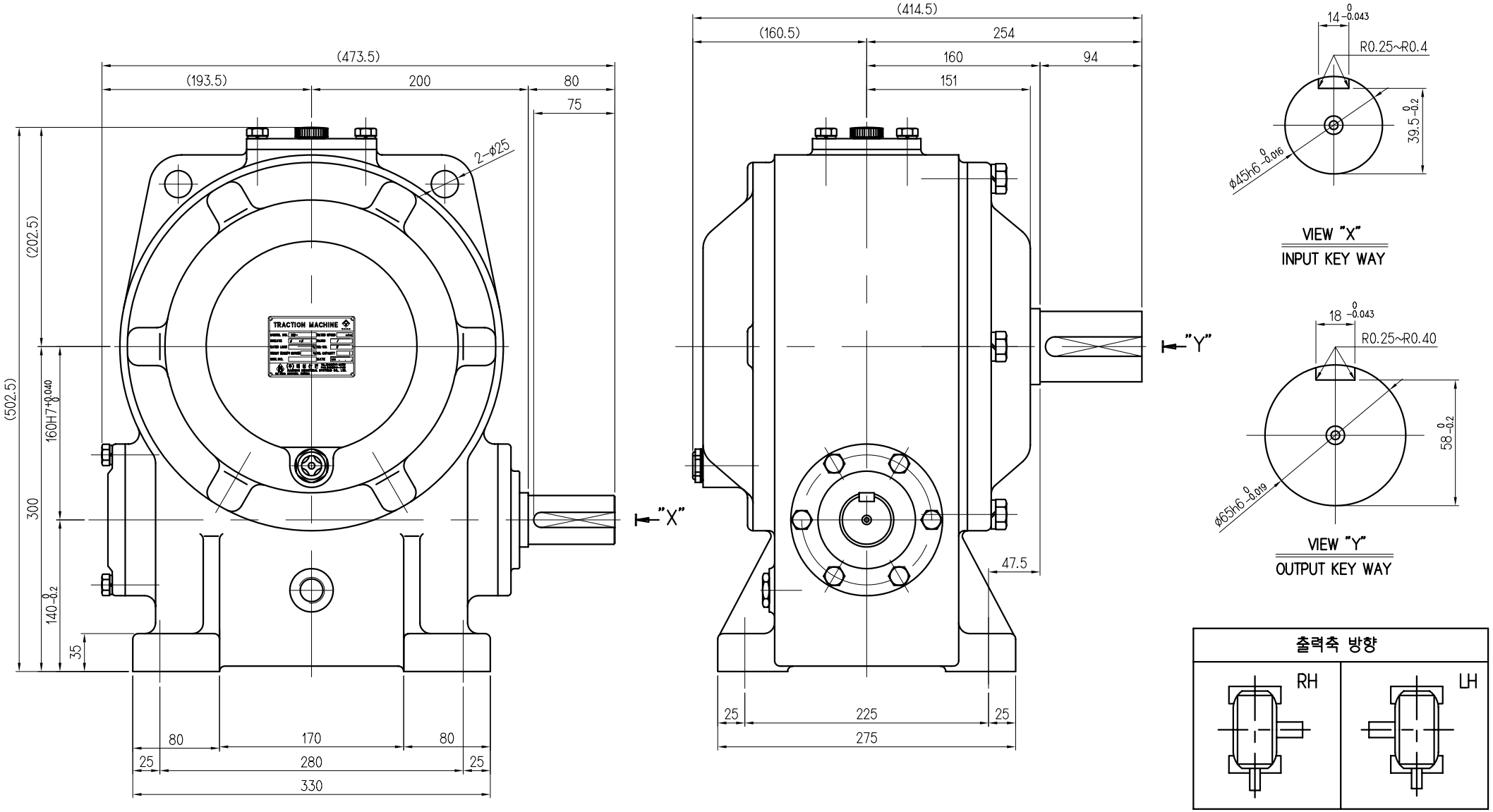
(473.5)
(193.5)
200
80
75
2-φ25
(502.5)
(202.5)
160H7 +0.040 0
300
140 0 -0.2
35
80
170
80
25
280
25
330
"X"
(414.5)
(160.5)
254
160
94
151
"Y"
47.5
25
225
25
275
14 0 -0.043
R0.25~R0.4
39.5 0 -0.2
φ45h6 0 -0.016
VIEW "X"
INPUT KEY WAY
18 0 -0.043
R0.25~R0.40
58 0 -0.2
φ65h6 0 -0.019
VIEW "Y"
OUTPUT KEY WAY
TRACTION MACHINE
출력축 방향
RH
LH