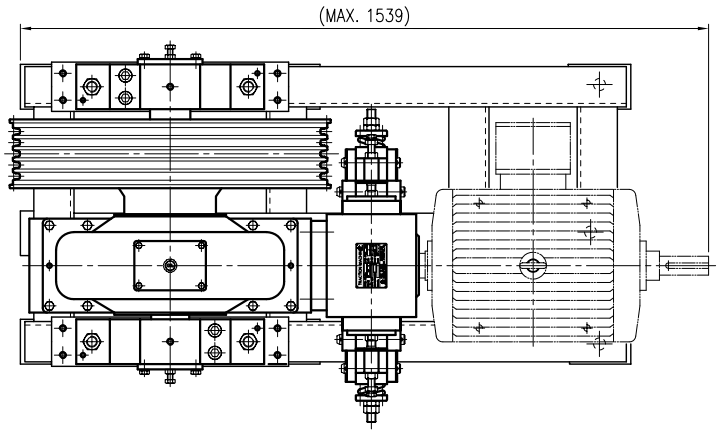
(MAX. 1539)

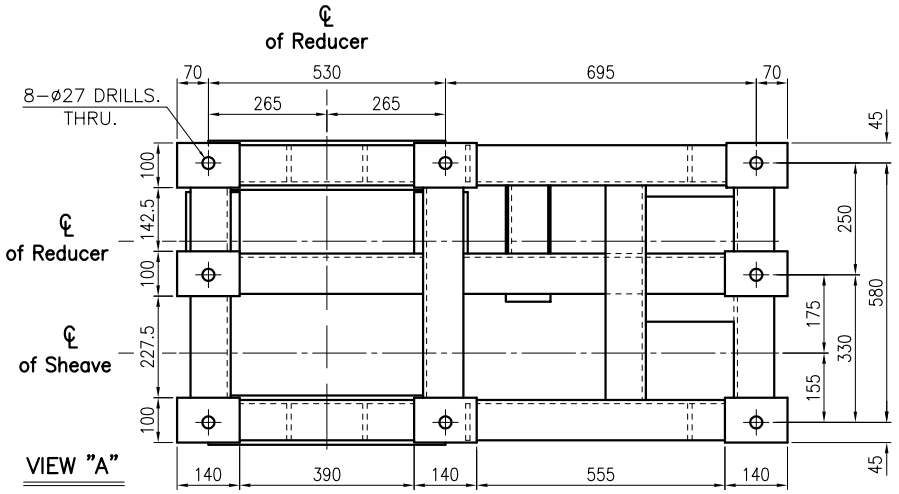
℄
of Reducer
8–ø27 DRILLS.
THRU.
70
530
695
70
265
265
45
100
142.5
100
227.5
100
℄
of Reducer
℄
of Sheave
250
580
175
330
155
VIEW "A"
140
390
140
555
140
45

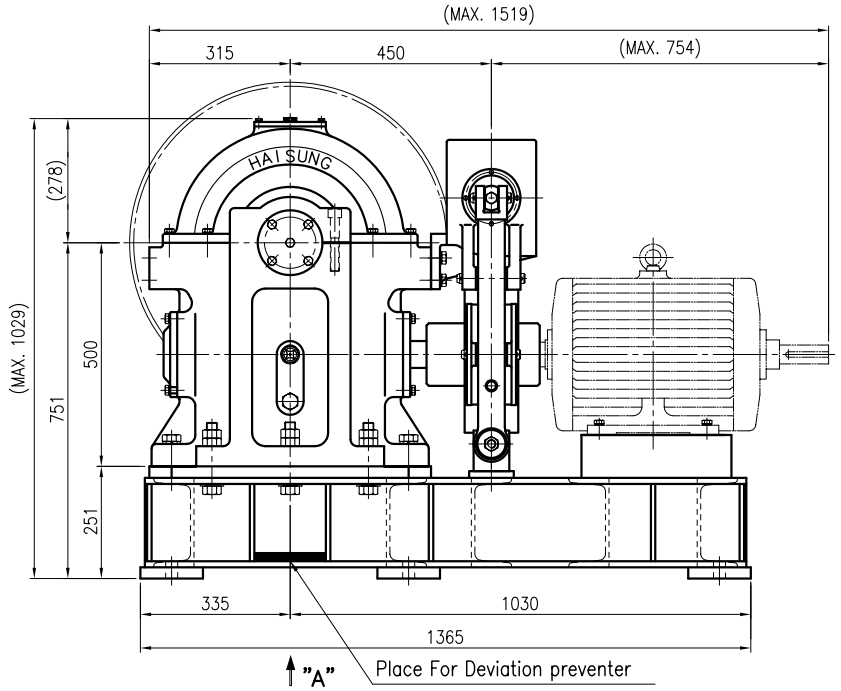
(MAX. 1519)
315
450
(MAX. 754)
HAISUNG
(278)
(MAX. 1029)
751
500
251
335
1030
1365
"A"
Place For Deviation preventer

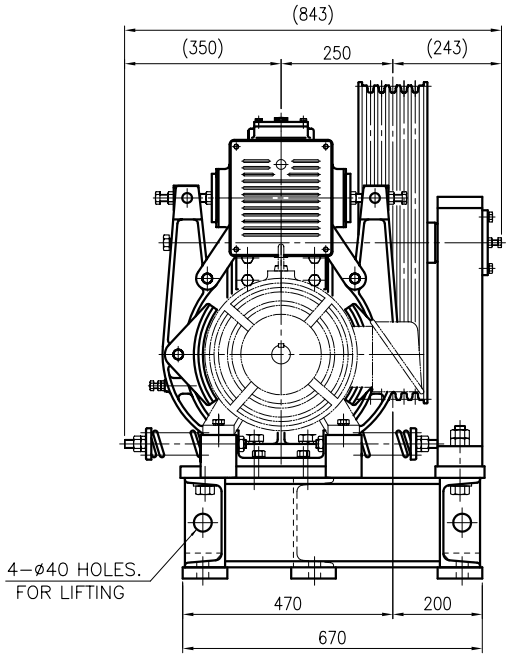
(843)
(350)
250
(243)
4–ø40 HOLES.
FOR LIFTING
470
200
670