KUKDONG Electronic Precision Co., Ltd.

KUKDONG ADAPTER SERIES

www.kdep.co.kr

KAT&KH Adapters are applicable to Connectors of VG95234(KDB Series), MIL-DTL-5015, 26482 & D38999 Series.





극동전자정밀주식회사
KUKDONG Electronic Precision Co., Ltd.

Contents

I. KAT ADAPTER SERIES PAGE 2 - 17

- Definitions
- Selection of Adapter Types
- Roll-back Repair With Adapters
- Tinel-Lock Adapters
- Tinel-Lock Ring and Braid
- Cross Reference Table
- Part Number Explanation
- Tinel-Lock Adapter Code 15 / 21 / 24 / 32 /40 / 41 / 54 / 58 / 76 / 78

II. KH ADAPTER SERIES PAGE 18 - 32

- Definitions
- Introdction
- Features
- Benefits
- Selection of Adapter Types
- Installation-Procedure
- Spring Coil Ref and Entry Size
- Cross Reference Chart
- Adapter Suggested Torque
- Part Number Explanation
- Zetalock Adapter Code A / C / D / F / H / K / L / Q

III. SPECIAL ADAPTER SERIES PAGE 33

KUKDONG Electronic Precision Co., Ltd.

KAT ADAPTER SERIES

KAT Adapter series are applicable to Connectors of VG95234(KDB Series), MIL-DTL-5015, 26482 & D38999 Series.

www.kdep.co.kr

극동전자정밀주식회사
KUKDONG Electronic Precision Co., Ltd.

ADAPTER/KAT Series

Definitions	4
Selection of Adapter Types	5
Roll-back Repair With Adapters	5
Tinel-Lock Adapters	5
Tinel-Lock Ring and Braid	6
Cross Reference Table	6
Part Number Explanation	7
Tinel-Lock Adapter Code 15	8
Tinel-Lock Adapter Code 18	9
Tinel-Lock Adapter Code 21	10
Tinel-Lock Adapter Code 24	11
Tinel-Lock Adapter Code 32 / 40	12
Tinel-Lock Adapter Code 41	13
Tinel-Lock Adapter Code 54	14
Tinel-Lock Adapter Code 58	15
Tinel-Lock Adapter Code 76	16
Tinel-Lock Adapter Code 78	17

Definitions

Kukdong Connector Code

Kukdong uses a numerical code to identify connectors with similar adapter interfaces.
This code is used to determine the adapter part number.

Adapter Type

This catalog explains Tinel-Lock type only and Kukdong offers three types.....
Tinel-Lock, Zetalock and spin-coupling. Each is designed to offer a suitable interface between a connector and a heat-shrinkable molded part.

Adapter Part Number

This is Kukdong sequence of numbers and letters that completely describes the adapter series, size, material, finish and modification codes.
The part numbering system is explained on page 7~15.

Entry Size

Entry sizes are specified on Tinel-Lock and Zetalock adapters only. It is the diameter of the hole through which the cable enters into the adapter.
Entry number 01 is equivalent to one sixteenth of an inch. For example, the 08 entry is 12.7mm(0.5in)

Ring Designator

A two-letter code that is part of each Tinel-Lock adapter part number. It specifies the size of Tinel-Lock ring to suit different types of cable braid.

Shell Size

This is the size of connector as specified by the connector manufacturer. It is normally a two digit number between 08 and 24, although certain connectors are obtainable in either larger or smaller sizes.

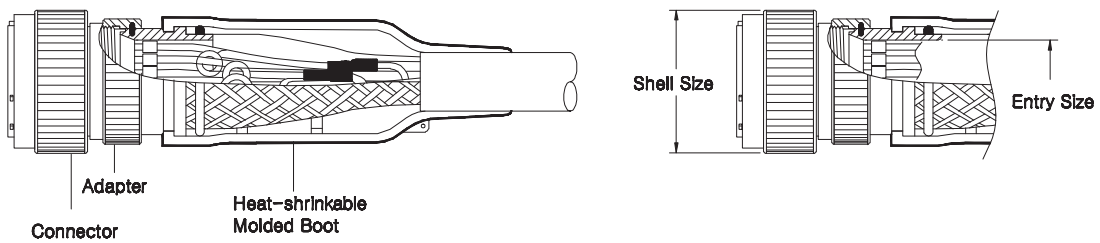

cut-away view showing complete screened cable termination

ADAPTER/KAT Series

Selection of Adapter Types

Kukdong offers several types of adapter for unscreened and screened termination systems. The choice is largely dependent upon the screening level required and the braid termination method.

The three principal adapter types are :
1. Tinel-Lock adapter
2. Zetalock adapter
3. Spin-Coupling adapter

Roll-back Repair With Adapters

More than 85 percent of cable repairs are made within 75mm(3in) of the connectors - usually because of a broken pin or wire.
By reheating the heat shrinkable boot and unscrewing the adapter coupling nut, the boot can be 'rolled back' providing access to the rear of the connector for repair.
This technique is applicable to Tinel-Lock and Zetalock adapters.

Tinel-Lock Adapters

This termination system consists of a modified spin-coupling type adapter with a Tinel-Lock ring.
The Tinel-Lock ring is made from a special shape memory metal that shrinks uniformly when heated.
The Tinel-Lock ring is used to terminate copper cable braid directly onto the rear of the adapter.
The adapter entry size and ring designator must be selected to suit the cable diameter and braid type.
The resulting 360° termination withstands severe shock, vibration, temperature cycling and corrosion.
Straight, 45° and 90° configurations are available

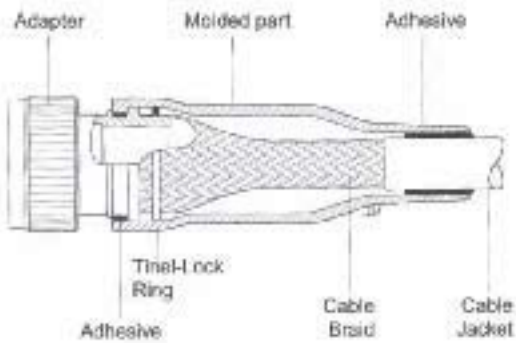

Tinel-Lock Ring and Braid

The Tinel-Lock ring designator must be specified according to the type of cable braid used, and is added to the part number after the adapter entry size.
There are two types of ring, AI and BI for each entry size.

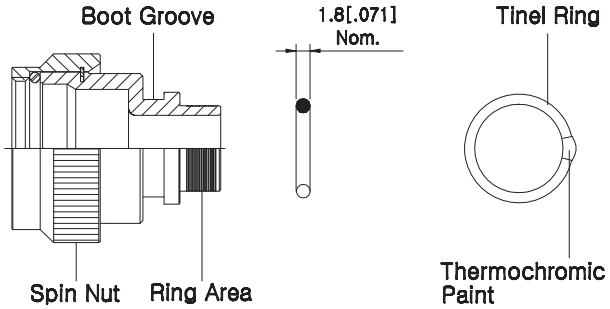

Braid type	Ring designator★
Single layer 36AWG	AI
Single layer 34AWG	AI
Single layer 32AWG	BI
Single layer 30AWG	BI
Single layer 36AWG	BI
Single layer 34AWG	BI

★A or B = Size of braid
I = insulating layer

Tinel-rings are marked with thermochromic paint which changes color when the correct installation temperature is reached. BI-type rings are identified with a red spot.

Braid type, material and construction are variable. If in doubt, contact Kukdong for more information

Cross Reference Table

Wire gauge (AWG) to diameter and area for solid conductor

AWG	Diameter		Area	
	mm	in	mm	in x 10^{-6}
40	0.079	0.0031	0.0049	0.0076
39	0.089	0.0035	0.0062	0.0096
38	0.102	0.0040	0.0081	0.0126
37	0.114	0.0045	0.0103	0.0159
36	0.127	0.0050	0.0127	0.0196
35	0.142	0.0056	0.0159	0.0246
34	0.160	0.0063	0.0201	0.0312
33	0.180	0.0071	0.0255	0.0396
32	0.203	0.0080	0.0324	0.0503
31	0.226	0.0089	0.0401	0.0622
30	0.254	0.0100	0.0507	0.0786
29	0.287	0.0113	0.0647	0.100
28	0.320	0.0126	0.0804	0.125

ADAPTER/KAT Series

Part Number Explanation

Tinel-Lock Adapter

K AT 58 A B 00 - 18 10 AI

Ring designator
AI - Single Braid
BI - Double Braid

Entry Size
04, 05, 06, 07, 08, 10, 12, 14, 16, 18, 20, 22, 24

Shell Size

08-8,9	10-10SL,10,11	12-12s,12,13	14-14s,14,15	16-16s,16,17
18-18,19	20-20,21	22-22,23	24-24,25	
28-28	32-32	36-36	40-40	

Manufacturer's prefix (Connector **code 18 only**)

Manufacturer code	Connector manufacturer MS3100/3101/3106
-	Manufacturer code not required
A	Amphenol - Class A
B	Bendix - Class A/E/R
C	Cannon - Class A/E/R
D	Unknown - Class A/E/R
R	Amphenol - Class R

Angle
00 - ∠0° 45 - ∠45° 90 - ∠90°

Finish
B - Cadmium QQ-P-416, Type II, Class 3 over electroless nickel
C - Nickel Plating
J - Passivated

Material
A - Aluminium alloy
S - Stainless steel

Connector Code
15 - MIL-DTL-5015 I (With endbell)
18 - MIL-DTL-5015 I
21 - MIL-DTL-26482 I (MS3110, MS3116)
24 - MIL-DTL-26482 I (MS3114)
32 - MIL-DTL-22992
40 - MIL-DTL-38999 III&IV
41 - MIL-DTL-38999 I & II
54 - MIL-DTL-5015 II
MIL-DTL-26482 II
MIL-DTL-81703 III
MIL-DTL-83723 I & III
58 - KDB Connector
76 - BS 9522-F0017
78 - BS 9522-F0032

Tinel-Lock Adapter

Company Prefix (KUKDONG)

Tinel-Lock Adapter Code 15 (MIL-DTL-5015 Series I , With Endbell)

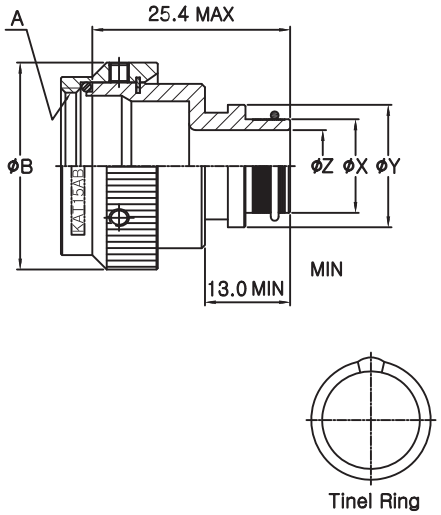

KAT15XX00-XXXXXX

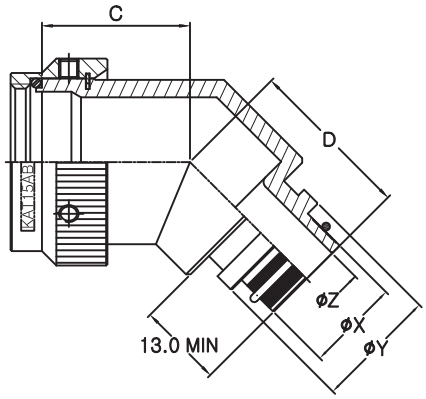

KAT15XX45-XXXXXX

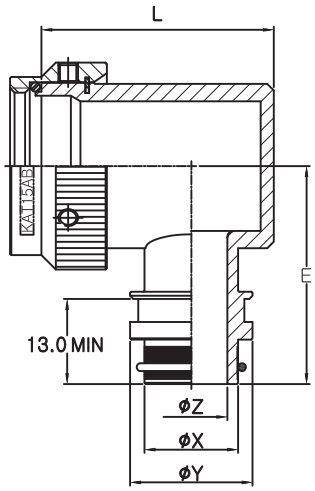

KAT15XX90-XXXXXX

K AT 15 A B 00 - 16 08 AI

- Ring designator
  - AI - Single Braid
  - BI - Double Braid
- Entry Size
- Shell Size
- Angle
  - 00 -∠0°, 45 -∠45°, 90 -∠90°
- Finish
  - B - Cadmium
    - QQ-P-416, Type II, Class 3
    - over electroless nickel
  - C - Nickel plating
  - J - Passivated
- Material
  - A - Aluminium alloy
  - S - Stainless steel
- Connector Code
- Tinel-Lock Adapter
- Company prefix (KUKDONG)

Entry Size	L MAX	ØX $^{0}_{-0.1}$	ØY ±0.1	ØZ $^{+0.1}_{0}$
04	31.5	9.5	14.0	6.3
05	34.3	11.1	15.6	7.9
06	35.8	12.7	17.2	9.5
07	37.3	14.3	18.8	11.1
08	39.1	15.9	20.3	12.7
10	41.4	19.0	23.5	15.9
12	45.5	22.2	26.7	19.0
14	48.8	25.4	29.8	22.2
16	51.8	28.5	33.0	25.4
18	54.9	31.7	36.2	28.5
20	58.2	34.9	39.3	31.7
22	61.5	38.1	42.5	34.9
24	64.8	41.3	45.7	38.1

Shell Size	A THD-2B	ØB MAX	C MAX	D MAX	E MAX	Entry MAX
10SL, 12s & 12	5/8-24UNEF	23.1	21.1	24.1	31.2	07
14s & 14	3/4-20UNEF	26.4	21.8	24.9	33.0	08
16s & 16	7/8-20UNEF	29.5	22.6	25.9	36.1	10
18	1 -20UNEF	34.0	23.4	26.7	37.6	12
20, 22	1 3/16-18UNEF	37.3	24.9	28.2	40.9	16
24, 28	1 7/16-18UNEF	46.2	27.4	29.7	47.2	20
32	1 3/4-18UNS	54.9	28.2	31.2	48.8	24
36	2 -18UNS	62.0	31.2	32.3	52.1	24

ADAPTER/KAT Series

Tinel-Lock Adapter Code 18 (MIL-DTL-5015 Series I)

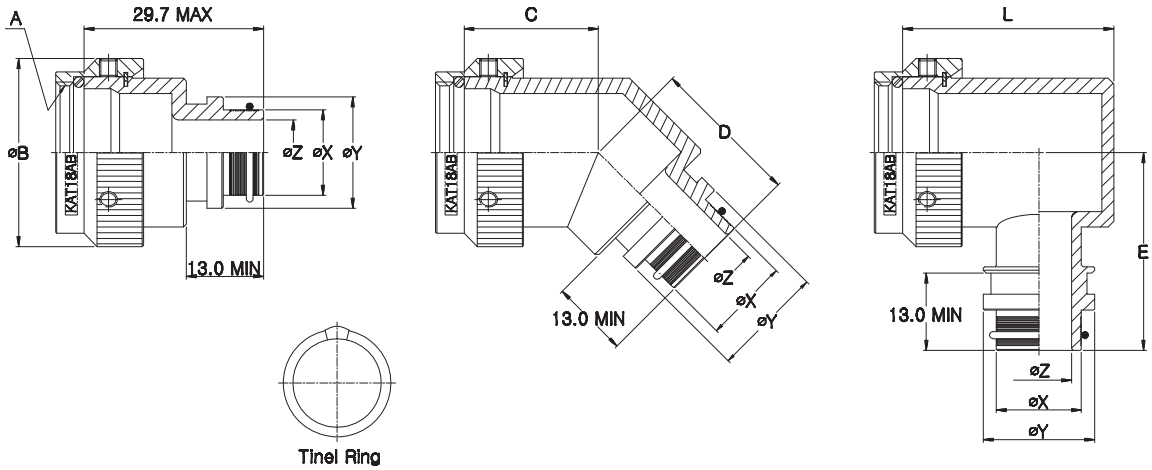

KAT18XX00-XXXXXX KAT18XX45-XXXXXX KAT18XX90-XXXXXX

K AT 18 A B 00 - 16 08 AI

- Ring designator
  AI: Single Braid
  BI: Double Braid
- Entry Size
- Shell Size
- Angle
  00: 0°, 45: 45°, 90: 90°
- Finish
  B : Cadmium
  QQ-P-416, Type II, Class 3
  over electroless nickel
  C : Nickel plating
  J : Passivated
- Material
  A: Aluminium alloy
  S: Stainless steel
- Connector Code
- Tinel-Lock Adapter
- Company prefix (KUKDONG)

Entry Size	L MAX	øX $^{0}_{-0.1}$	øY ±0.1	øZ $^{+0.1}_{0}$
04	31.5	9.5	14.0	6.3
05	34.3	11.1	15.6	7.9
06	35.8	12.7	17.2	9.5
07	37.3	14.3	18.8	11.1
08	39.1	15.9	20.3	12.7
10	41.4	19.0	23.5	15.9
12	45.5	22.2	26.7	19.0
14	48.8	25.4	29.8	22.2
16	51.8	28.5	33.0	25.4
18	54.9	31.7	36.2	28.5
20	58.2	34.9	39.3	31.7
22	66.8	38.1	42.5	34.9
24	70.1	41.3	45.7	38.1

Shell Size	A THD-2B	øB MAX	C MAX	D MAX	E MAX	Entry MAX
10SL	9/16-24UNEF	21.6	21.1	24.1	31.2	07
12s & 12	5/8-24UNEF	23.4	21.1	24.1	31.2	08
14s & 14	3/4-20UNEF	26.4	21.8	24.9	33.0	10
16s & 16	7/8-20UNEF	31.2	22.6	25.9	36.1	12
18	1 -20UNEF	34.3	23.4	26.7	37.6	12
20	1 1/8-18UNEF	37.6	24.1	27.4	39.4	16
22	1 1/4-18UNEF	40.6	24.9	28.2	40.9	18
24	1 3/8-18UNEF	43.9	24.9	28.2	42.4	20
28	1 5/8-18UNEF	53.3	27.4	29.7	47.2	24
32	1 7/8-16UN	56.6	28.2	31.2	48.8	24
36	2 1/8-16UN	63.0	31.2	32.3	52.1	24

Tinel-Lock Adapter Code 21 (MIL-DTL-26482 Series I)

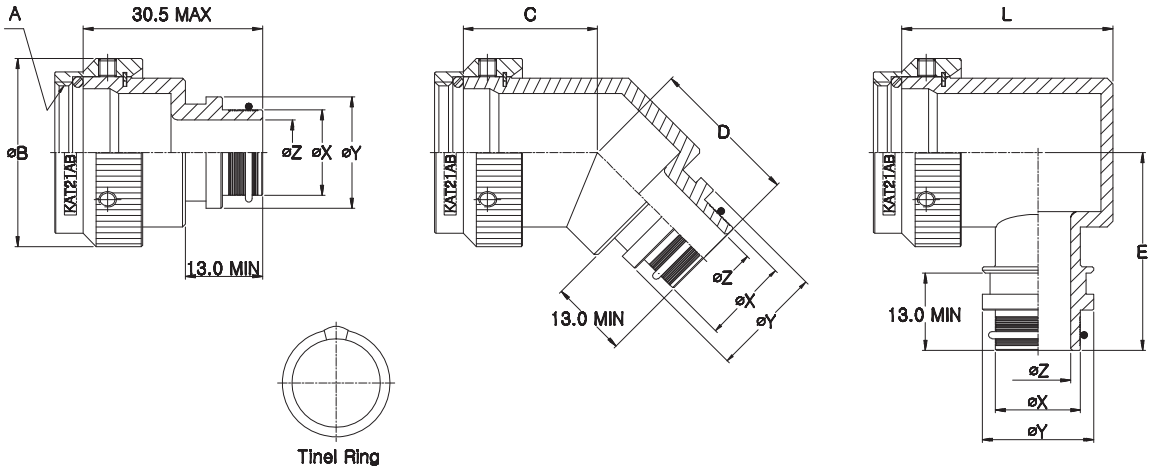

KAT21XX00-XXXXXX KAT21XX45-XXXXXX KAT21XX90-XXXXXX

K AT 21 A B 00 - 16 08 AI

- Ring designator
  - AI: Single Braid
  - BI: Double Braid
- Entry Size
- Shell Size
- Angle
  - 00: 0°, 45: 45°, 90: 90°
- Finish
  - B : Cadmium QQ-P-416, Type II, Class 3 over electroless nickel
  - C : Nickel plating
  - J : Passivated
- Material
  - A: Aluminium alloy
  - S: Stainless steel
- Connector Code
- Tinel-Lock Adapter
- Company prefix (KUKDONG)

Entry Size	L MAX	øX $^{0}_{-0.1}$	øY ±0.1	øZ $^{+0.1}_{0}$
04	31.0	9.5	14.0	6.3
05	32.8	11.1	15.6	7.9
06	34.3	12.7	17.2	9.5
07	35.8	14.3	18.8	11.1
08	37.3	15.9	20.3	12.7
10	40.6	19.0	23.5	15.9
12	43.7	22.2	26.7	19.0
14	47.0	25.4	29.8	22.2
16	50.0	28.5	33.0	25.4
18	53.3	31.7	36.2	28.5

Shell Size	A THD-2B	øB MAX	C MAX	D MAX	E MAX	Entry MAX
8	7/16-28UNEF	18.3	21.6	23.1	29.0	04
10	9/16-24UNEF	21.6	22.4	23.9	30.5	06
12	11/16-24UNEF	24.9	23.1	24.6	32.3	08
14	13/16-20UNEF	28.2	23.4	24.9	33.5	10
16	15/16-20UNEF	31.2	24.1	25.7	34.8	12
18	1 1/16-18UNEF	34.5	24.4	25.9	36.3	12
20	1 3/16-18UNEF	37.6	25.1	26.7	38.1	14
22	1 5/16-18UNEF	40.6	25.7	27.4	39.6	16
24	1 7/16-18UNEF	43.2	26.2	27.7	40.9	18

ADAPTER/KAT Series

Tinel-Lock Adapter Code 24 (MIL-DTL-26482 Series I)

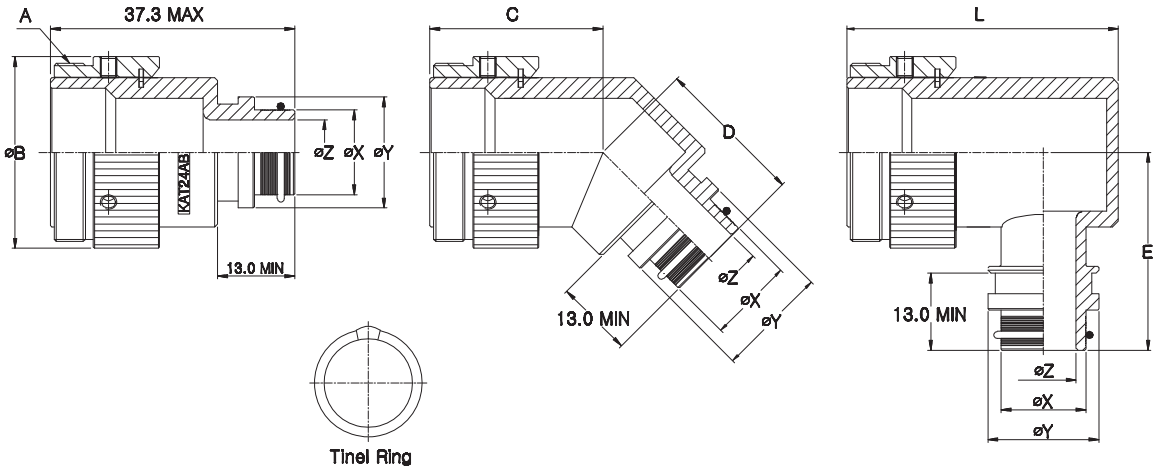

KAT24XX00-XXXXXX KAT24XX45-XXXXXX KAT24XX90-XXXXXX

K AT 24 A B 00 - 16 08 AI

- Ring designator
  - AI: Single Braid
  - BI: Double Braid
- Entry Size
- Shell Size
- Angle
  - 00: 0°, 45: 45°, 90: 90°
- Finish
  - B : Cadmium QQ-P-416, Type II, Class 3 over electroless nickel
  - C : Nickel plating
  - J : Passivated
- Material
  - A: Aluminium alloy
  - S: Stainless steel
- Connector Code
- Tinel-Lock Adapter
- Company prefix (KUKDONG)

Entry Size	L MAX	øX $^{0}_{-0.1}$	øY ±0.1	øZ $^{+0.1}_{0}$
04	43.5	9.5	14.0	6.3
05	44.5	11.1	15.6	7.9
06	46.0	12.7	17.2	9.5
07	47.5	14.3	18.8	11.1
08	49.5	15.9	20.3	12.7
10	52.5	19.0	23.5	15.9
12	55.5	22.2	26.7	19.0
14	59.0	25.4	29.8	22.2
16	62.0	28.5	33.0	25.4
18	65.0	31.7	36.2	28.5

Shell Size	A THD-2A	øB MAX	C MAX	D MAX	E MAX	Entry MAX
8	5/8-24UNEF	19.8	24.0	22.1	27.2	04
10	3/4-20UNEF	23.1	24.5	22.9	28.7	06
12	7/8-20UNEF	26.2	25.0	23.4	30.5	08
14	1 -20UNEF	29.5	26.0	24.1	32.0	10
16	1 1/8-18UNEF	32.5	26.5	24.6	33.5	12
18	1 1/4-18UNEF	35.8	27.0	25.4	35.1	14
20	1 3/8-18UNEF	38.9	29.0	25.9	36.1	14
22	1 1/2-18UNEF	42.2	29.5	26.7	38.4	18
24	1 5/8-18UNEF	45.2	30.5	27.2	39.9	18

Tinel-Lock Adapter Code 32 (MIL-DTL-22992 Series, LH-THREAD)

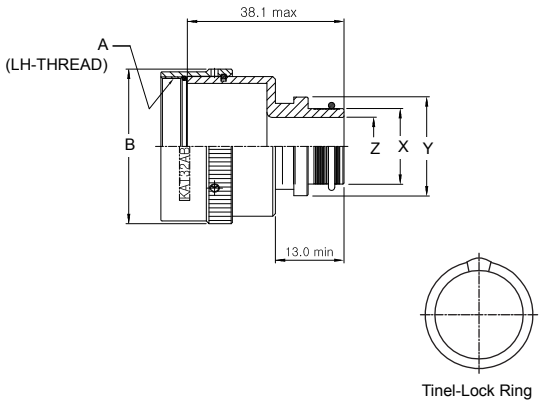

KAT32XX00-XXXXXX

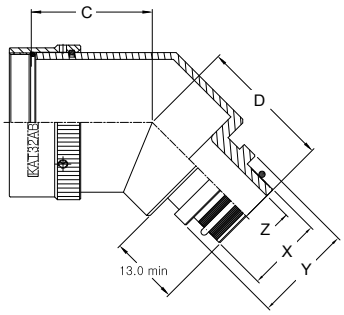

KAT32XX45-XXXXXX

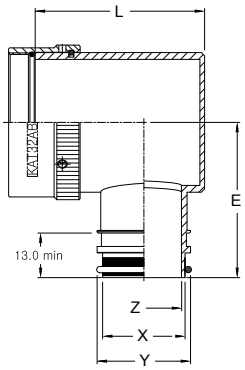

KAT32XX90-XXXXXX

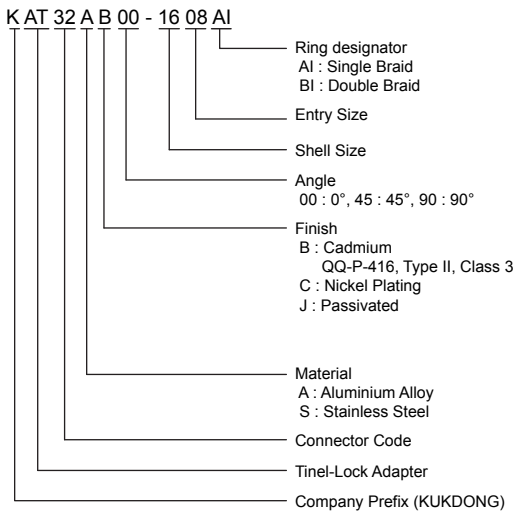

Entry Size	L MAX	X 0 -0.1	Y +0.1 - 0.1	Z +0.1 0
04	43.5	9.5	14.0	6.3
05	44.5	11.1	15.6	7.9
06	46.0	12.7	17.2	9.5
07	47.5	14.3	18.8	11.1
08	49.5	15.9	20.3	12.7
10	52.5	19.0	23.5	15.9
12	55.5	22.2	26.7	19.0
14	59.0	25.4	29.8	22.2
16	62.0	28.5	33.0	25.4
18	72.5	31.7	36.2	28.5
20	76.1	34.9	39.3	31.7
22	80.0	38.1	42.5	34.9
24	83.5	41.3	45.7	38.1

Shell size	A Left Hand Thd Class 2B	B MAX	C MAX	D MAX	E MAX	Entry MAX
12	1/4-20UNEF	27.2	29.0	25.4	33.5	08
14	7/8-20UNEF	30.2	29.7	25.9	35.3	10
16	1 -20UNEF	33.5	30.0	26.2	37.1	12
18	1 1/8-18UNEF	36.6	30.7	26.9	38.6	14
20	1 1/4-18UNEF	39.9	31.2	27.7	40.1	16
22	1 3/8-18UNEF	43.9	32.0	28.2	41.7	18
24	1 5/8-18UNEF	52.6	33.5	30.0	46.5	22
28	1 7/8-16UN	58.9	34.8	31.2	49.8	24
32	2 1/16-16UNS	65.3	36.3	32.5	52.8	24
36	2 5/16-16UNS	71.6	37.6	33.8	56.1	24

Tinel-Lock Adapter Code 40 (MIL-DTL-38999 Series III & IV)

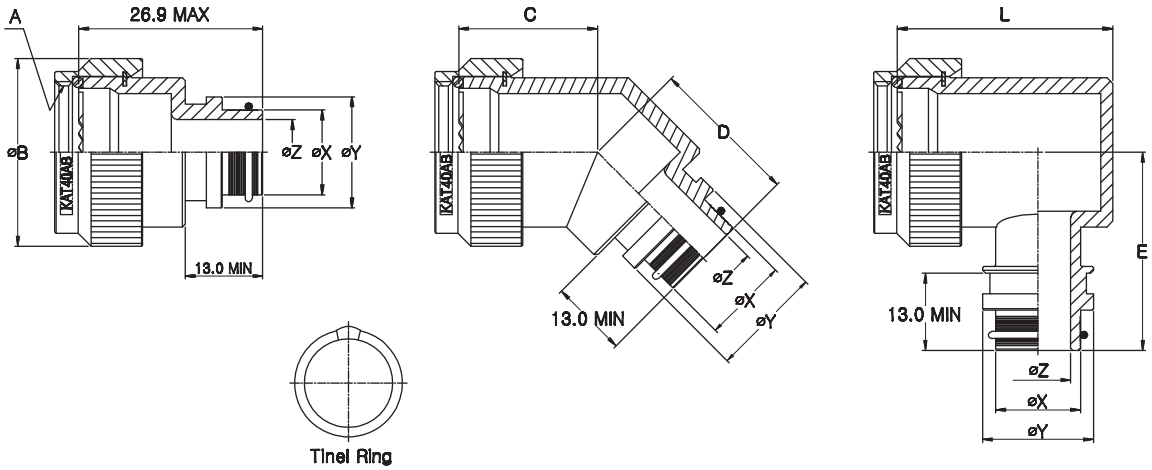

KAT40XX00-XXXXXX KAT40XX45-XXXXXX KAT40XX90-XXXXXX

K AT 40 A B 00 - 16 08 AI

- Ring designator
  - AI: Single Braid
  - BI: Double Braid
- Entry Size
- Shell Size
- Angle
  - 00: 0°, 45: 45°, 90: 90°
- Finish
  - B : Cadmium QQ-P-416, Type II, Class 3 over electroless nickel
  - C : Nickel plating
  - J : Passivated
- Material
  - A: Aluminium alloy
  - S: Stainless steel
- Connector Code
- Tinel-Lock Adapter
- Company prefix (KUKDONG)

Entry Size	L MAX	øX $^{0}_{-0.1}$	øY ±0.1	øZ $^{+0.1}_{0}$
04	31.2	9.5	14.0	6.3
05	32.8	11.1	15.6	7.9
06	34.3	12.7	17.2	9.5
07	36.1	14.3	18.8	11.1
08	37.6	15.9	20.3	12.7
10	40.6	19.0	23.5	15.9
12	43.9	22.2	26.7	19.0
14	47.0	25.4	29.8	22.2
16	50.8	28.5	33.0	25.4
18	54.1	31.7	36.2	28.5
20	57.2	34.9	39.3	31.7

Order No.	Shell Size		A THD-2B	øB MAX	C MAX	D MAX	E MAX	Entry MAX
	Commercial	Military						
08	9	A	M12 x 1.0	19.1	20.8	22.6	27.9	04
10	11	B	M15 x 1.0	21.6	21.3	23.4	30.5	07
12	13	C	M18 x 1.0	25.4	22.1	24.1	32.0	08
14	15	D	M22 x 1.0	29.2	22.6	24.1	34.0	10
16	17	E	M25 x 1.0	31.8	23.4	24.9	35.6	12
18	19	F	M28 x 1.0	35.6	24.1	25.7	36.8	14
20	21	G	M31 x 1.0	38.1	24.6	26.4	38.4	16
22	23	H	M34 x 1.0	41.9	25.4	27.2	39.9	18
24	25	J	M37 x 1.0	44.5	25.9	27.2	42.4	20

ADAPTER/KAT Series

Tinel-Lock Adapter Code 41 (MIL-DTL-38999 Series I & II)

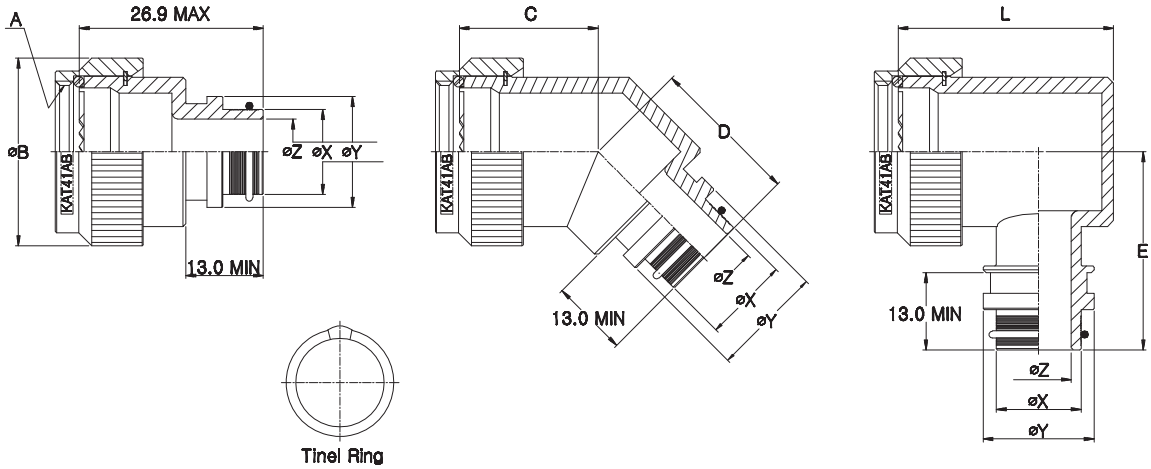

KAT41XX00-XXXXXX KAT41XX45-XXXXXX KAT41XX90-XXXXXX

K AT 41 A B 00 - 16 08 AI

- Ring designator
  - AI: Single Braid
  - BI: Double Braid
- Entry Size
- Shell Size
- Angle
  - 00: 0°, 45: 45°, 90: 90°
- Finish
  - B : Cadmium QQ-P-416, Type II, Class 3 over electroless nickel
  - C : Nickel plating
  - J : Passivated
- Material
  - A: Aluminium alloy
  - S: Stainless steel
- Connector Code
- Tinel-Lock Adapter
- Company prefix (KUKDONG)

Entry Size	L MAX	øX $^{0}_{-0.1}$	øY ±0.1	øZ $^{+0.1}_{0}$
04	27.2	9.5	14.0	6.3
05	28.7	11.1	15.6	7.9
06	30.2	12.7	17.2	9.5
07	31.8	14.3	18.8	11.1
08	33.5	15.9	20.3	12.7
10	36.6	19.0	23.5	15.9
12	39.9	22.2	26.7	19.0
14	42.9	25.4	29.8	22.2
16	46.2	28.5	33.0	25.4
18	49.3	31.7	36.2	28.5

Order No.	Shell Size		A THD-2B	øB MAX	C MAX	D MAX	E MAX	Entry MAX
	Series I	Series II						
08	9	8	7/16-28UNEF	19.1	17.5	23.1	29.2	04
10	11	10	9/16-24UNEF	21.6	18.3	23.6	30.7	06
12	13	12	11/16-24UNEF	25.4	18.8	24.4	32.5	08
14	15	14	13/16-20UNEF	29.0	19.3	24.9	34.0	10
16	17	16	15/16-20UNEF	31.8	20.1	25.4	35.6	12
18	19	18	1 1/16-18UNEF	35.6	20.6	26.2	37.1	12
20	21	20	1 3/16-18UNEF	38.1	21.3	26.9	38.9	14
22	23	22	1 5/16-18UNEF	41.9	22.1	27.4	40.4	16
24	25	24	1 7/16-18UNEF	44.5	22.6	28.2	41.9	18

Tinel-Lock Adapter Code 54 (MIL-DTL-5015 Series II (MS3400), MIL-DTL-26482 Series II MIL-DTL-81703 Series III, MIL-DTL-83723 Series I & III)

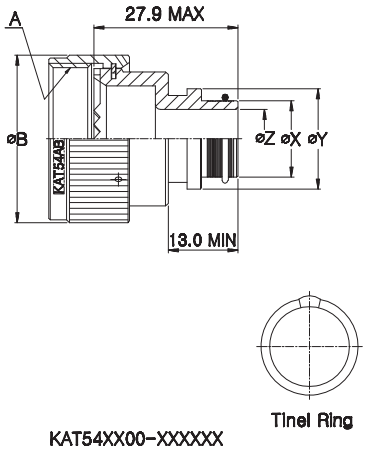

KAT54XX00-XXXXXX

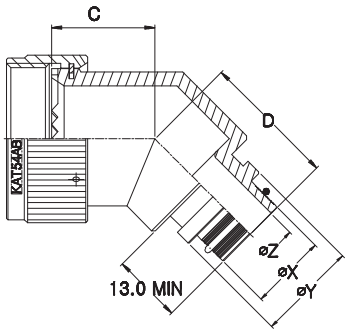

KAT54XX45-XXXXXX

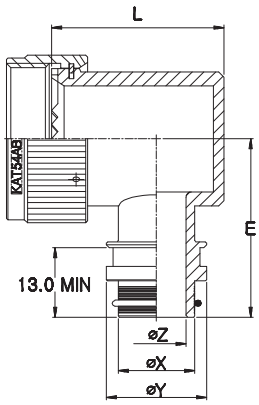

KAT54XX90-XXXXXX

K AT 54 A B 00 - 16 08 AI

- Ring designator
  - AI: Single Braid
  - BI: Double Braid
- Entry Size
- Shell Size
- Angle
  - 00: 0°, 45: 45°, 90: 90°
- Finish
  - B : Cadmium QQ-P-416, Type II, Class 3 over electroless nickel
  - C : Nickel plating
  - J : Passivated
- Material
  - A: Aluminium alloy
  - S: Stainless steel
- Connector Code
- Tinel-Lock Adapter
- Company prefix (KUKDONG)

Entry Size	L MAX	øX $^{0}_{-0.1}$	øY ±0.1	øZ $^{+0.1}_{0}$
04	28.4	9.5	14.0	6.3
05	30.2	11.1	15.6	7.9
06	31.8	12.7	17.2	9.5
07	33.3	14.3	18.8	11.1
08	35.1	15.9	20.3	12.7
10	38.1	19.0	23.5	15.9
12	41.1	22.2	26.7	19.0
14	44.5	25.4	29.8	22.2
16	47.8	28.5	33.0	25.4
18	50.8	31.7	36.2	28.5
20	53.8	34.9	39.3	31.7
22	57.2	38.1	42.5	34.9
24	60.5	41.3	45.7	38.1

Shell Size		A	øB	C	D	E	Entry
MIL-DTL-26482 II	MIL-DTL-5015G	THD-2B	MAX	MAX	MAX	MAX	MAX
8		1/2-20UNF	15.7	19.1	23.1	27.9	04
10	10SL	5/8-24UNEF	18.6	19.6	23.6	29.5	06
12	12s & 12	3/4-20UNEF	21.8	20.3	24.1	31.0	08
14	14s & 14	7/8-20UNEF	25.0	20.8	24.6	32.5	08
16	16s & 16	1 -20UNEF	28.2	21.3	25.4	34.3	10
18	18	1 1/16-18UNEF	30.9	21.8	25.7	35.6	12
20	20	1 3/16-18UNEF	34.2	22.4	26.4	37.1	14
22	22	1 5/16-18UNEF	37.3	23.1	26.9	38.9	16
24	24	1 7/16-18UNEF	40.5	23.6	27.7	40.4	18
	28	1 3/4-18UNS	50.0	24.9	29.2	45.2	22
	32	2 -18UNS	56.4	26.2	30.5	48.3	24
	36	2 1/4-16UN	62.7	27.4	31.8	51.6	24

ADAPTER/KAT Series

Tinel-Lock Adapter Code 58 (KDB Connector)

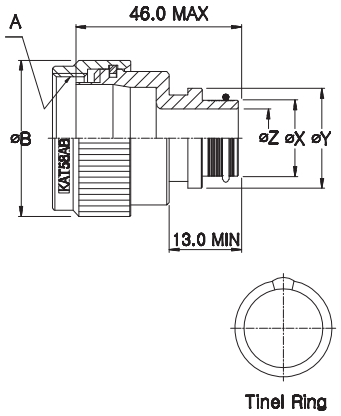

KAT58XX00-XXXXXX

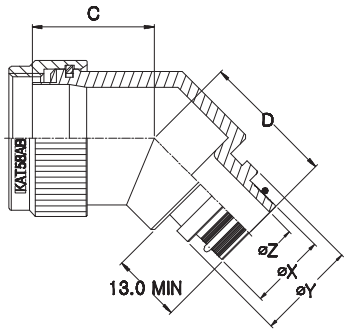

KAT58XX45-XXXXXX

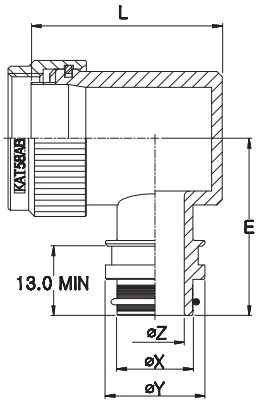

KAT58XX90-XXXXXX

K AT 58 A B 00 - 16 08 AI

- Ring designator
  - AI: Single Braid
  - BI: Double Braid
- Entry Size
- Shell Size
- Angle
  - 00: 0°, 45: 45°, 90: 90°
- Finish
  - B : Cadmium QQ-P-416, Type II, Class 3 over electroless nickel
  - C : Nickel plating
  - J : Passivated
- Material
  - A: Aluminium alloy
  - S: Stainless steel
- Connector Code
- Tinel-Lock Adapter
- Company prefix (KUKDONG)

Entry Size	L MAX	øX $^{0}_{-0.1}$	øY ±0.1	øZ $^{+0.1}_{0}$
04	43.5	9.5	14.0	6.3
05	44.5	11.1	15.6	7.9
06	46.0	12.7	17.2	9.5
07	47.5	14.3	18.8	11.1
08	49.5	15.9	20.3	12.7
10	52.5	19.0	23.5	15.9
12	55.5	22.2	26.7	19.0
14	59.0	25.4	29.8	22.2
16	62.0	28.5	33.0	25.4
18	65.0	31.7	36.2	28.5
20	69.0	34.9	39.3	31.7
22	71.0	38.1	42.5	34.9
24	73.5	41.3	45.7	38.1

Shell Size	A THD-2B	øB MAX	C MAX	D MAX	E MAX	Entry MAX
10SL	9/16-24UNEF	20.1	19.5	22.5	27.0	05
12s & 12	5/8-24UNEF	23.4	21.5	22.5	28.0	06
14s & 14	3/4-20UNEF	24.9	22.5	23.0	28.5	07
16s & 16	7/8-20UNEF	27.7	23.5	23.5	30.0	08
18	1 -20UNEF	31.2	31.5	23.5	30.5	10
20	1 1/8-18UNEF	35.8	32.0	25.0	33.0	12
22	1 1/4-18UNEF	38.9	33.0	25.5	33.5	14
24	1 3/8-18UNEF	41.9	33.5	26.0	36.0	16
28	1 5/8-18UNEF	48.5	35.0	27.0	37.5	18
32	1 7/8-16UN	54.6	36.5	28.0	40.0	22
36	2 1/8-16UN	68.6	38.0	29.0	45.0	24

Tinel-Lock Adapter Code 76 (BS 9522-F0017)

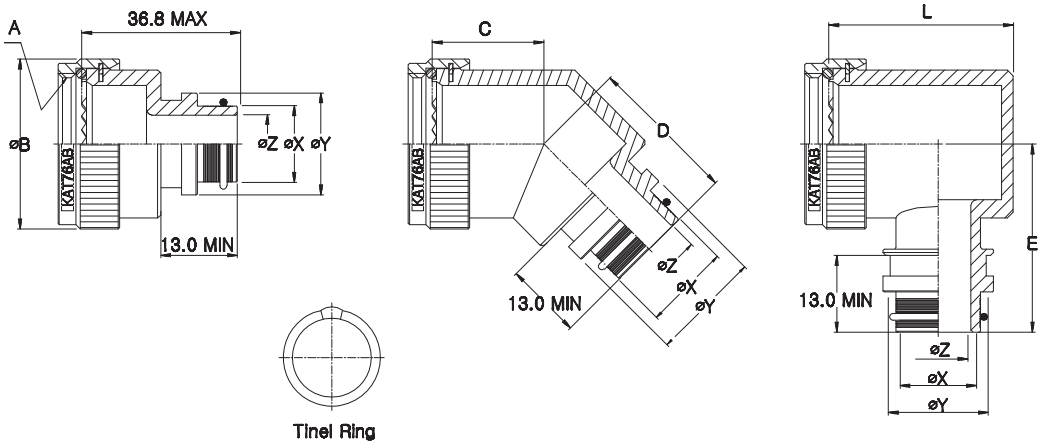

KAT76XX00-XXXXXX KAT76XX45-XXXXXX KAT76XX90-XXXXXX

K AT 76 A B 00 - 16 08 AI

- Ring designator
  - AI: Single Braid
  - BI: Double Braid
- Entry Size
- Shell Size
- Angle
  - 00: 0°, 45: 45°, 90: 90°
- Finish
  - B : Cadmium QQ-P-416, Type II, Class 3 over electroless nickel
  - C : Nickel plating
  - J : Passivated
- Material
  - A: Aluminium alloy
  - S: Stainless steel
- Connector Code
- Tinel-Lock Adapter
- Company prefix (KUKDONG)

Entry Size	L MAX	øX $^{0}_{-0.1}$	øY ±0.1	øZ $^{+0.1}_{0}$
04	31.0	9.5	14.0	6.3
05	32.8	11.1	15.6	7.9
06	34.3	12.7	17.2	9.5
07	35.8	14.3	18.8	11.1
08	37.3	15.9	20.3	12.7
10	40.6	19.0	23.5	15.9
12	43.7	22.2	26.7	19.0
14	47.0	25.4	29.8	22.2
16	50.0	28.5	33.0	25.4
18	53.3	31.7	36.2	28.5
20	58.2	34.9	39.3	31.7

Shell Size	A THD-2B	øB MAX	C MAX	D MAX	E MAX	Entry MAX
8	7/16-28UNEF	20.1	18.8	22.1	26.7	04
10	9/16-24UNEF	23.1	19.3	22.9	28.2	07
12	11/16-24UNEF	27.2	20.1	23.4	30.2	08
14	13/16-20UNEF	30.2	20.8	24.1	31.8	10
16	15/16-20UNEF	33.5	21.3	24.6	33.5	12
18	1 1/16-18UNEF	36.6	22.1	25.4	35.1	12
20	1 3/16-18UNEF	39.9	22.6	25.9	36.6	16
22	1 5/16-18UNEF	42.9	23.4	26.7	38.1	18
24	1 7/16-18UNEF	45.5	24.6	27.2	39.4	20

ADAPTER/KAT Series

Tinel-Lock Adapter Code 78 (BS 9522-F0032)

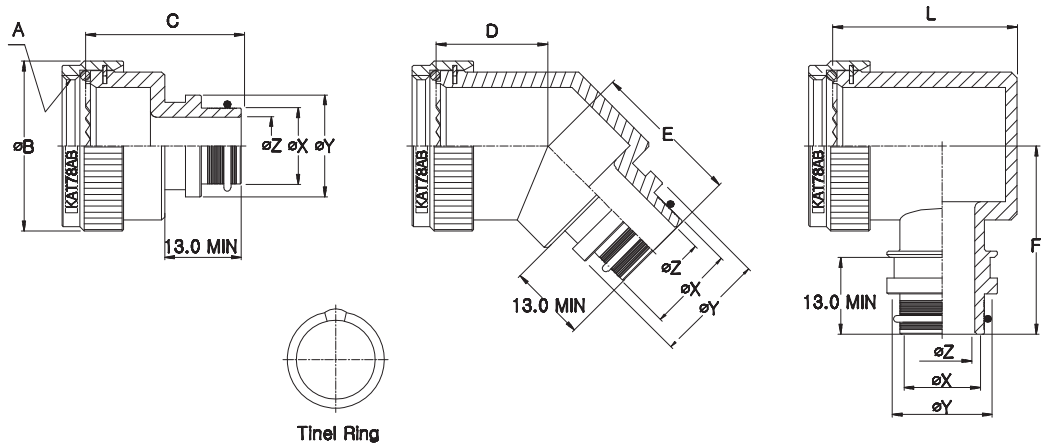

KAT78XX00-XXXXXX KAT78XX45-XXXXXX KAT78XX90-XXXXXX

K AT 78 A B 00 - 16 08 AI

- Ring designator
  - AI: Single Braid
  - BI: Double Braid
- Entry Size
- Shell Size
- Angle
  - 00: 0°, 45: 45°, 90: 90°
- Finish
  - B : Cadmium QQ-P-416, Type II, Class 3 over electroless nickel
  - C : Nickel plating
  - J : Passivated
- Material
  - A: Aluminium alloy
  - S: Stainless steel
- Connector Code
- Tinel-Lock Adapter
- Company prefix (KUKDONG)

Entry Size	L MAX	øX $^{0}_{-0.1}$	øY ±0.1	øZ $^{+0.1}_{0}$
04	34.0	9.5	14.0	6.3
05	35.5	11.1	15.6	7.9
06	36.0	12.7	17.2	9.5
07	37.5	14.3	18.8	11.1
08	40.5	15.9	20.3	12.7
10	43.5	19.0	23.5	15.9
12	46.5	22.2	26.7	19.0
14	49.5	25.4	29.8	22.2
16	53.0	28.5	33.0	25.4
18	55.5	31.7	36.2	28.5
20	59.0	34.9	39.3	31.7
22	62.5	38.1	42.5	34.9
24	65.0	41.3	45.7	38.1

Shell Size	A THD-2B	øB MAX	C MAX	D MAX	E MAX	F MAX	Entry MAX
10SL	9/16-24UNEF	23.1	28.2	18.5	23.5	28.0	05
12s & 12	5/8-24UNEF	23.1	28.2	18.5	23.5	28.0	05
14s & 14	3/4-20UNEF	26.4	28.2	19.1	24.0	30.0	07
16s & 16	7/8-20UNEF	31.0	36.8	22.0	24.5	31.0	08
18	1 -20UNEF	34.3	36.8	23.0	25.0	33.0	10
20	1 1/8-18UNEF	37.3	38.9	25.0	26.0	34.6	12
22	1 1/4-18UNEF	40.6	38.9	25.0	26.5	36.1	14
24	1 3/8-18UNEF	43.9	41.2	26.0	27.0	38.1	16
28	1 5/8-18UNEF	50.0	41.2	28.0	28.0	40.9	18
32	1 7/8-16UN	56.4	44.7	28.0	29.0	44.5	22
36	2 1/8-16UN	62.7	44.7	29.0	30.5	47.0	24

KUKDONG Electronic Precision Co., Ltd.

KH ADAPTER SERIES

KH Adapter series are applicable to Connectors of VG95234(KDB Series), MIL-DTL-5015, 26482 & D38999 Series.

www.kdep.co.kr

극동전자정밀주식회사
KUKDONG Electronic Precision Co., Ltd.

ADAPTER/KH Series

Definitions	20
Introdction	20
Features	21
Benefits	21
Selection of Adapter Types	21
Installation-Procedure	22
Spring Coil Ref and Entry Size	23
Cross Reference Chart	23
Adapter Suggested Torque	23
Part Number Explanation	24
Zetalock Adapter Code A	25
Zetalock Adapter Code C	26
Zetalock Adapter Code D	27
Zetalock Adapter Code F	28
Zetalock Adapter Code H	29
Zetalock Adapter Code K	30
Zetalock Adapter Code L	31
Zetalock Adapter Code Q	32

Definitions

Kukdong Connector Code

Kukdong uses a numerical code to identify connectors with similar adapter interfaces.
This code is used to determine the adapter part number.

Adapter Type

This catalog explains Zetalock(braided)type only and Kukdong offers three types.....
Zetalock, Tinel-lock and spin-coupling. Each is designed to offer a suitable interface between a connector and a heat-shrinkable molded part.

Adapter Part Number

This is Kukdong sequence of numbers and letters that completely describes the adapter series, size, material, finish and modification codes.
The part numbering system is explained on page 22~28.

Introduction

Zetalock is a unique re-enterable termination system for connecting a cable shielding braid to a circular connector.When used in conjunction with our heatshrink molded shape, a sealed environmental termination system is achieved. Predominantly used in the Aerospace, Defense and Professional Electronics sectors.

Zetalock incorporates a specially developed backshell designed to accommodate the braid using a constant force spring.

The main feature is that the termination can be re-entered when required. It is thereby possible to effect repairs to connector pins/sockets without the need to discard any part of the shielding system.

This method gives comparable performance to the other braid trap arrangements, in terms of tensile strength and DC resistance. Furthermore, due to the self-tensioning nature of the spring, it is exceedingly resistant to vibration and shock.

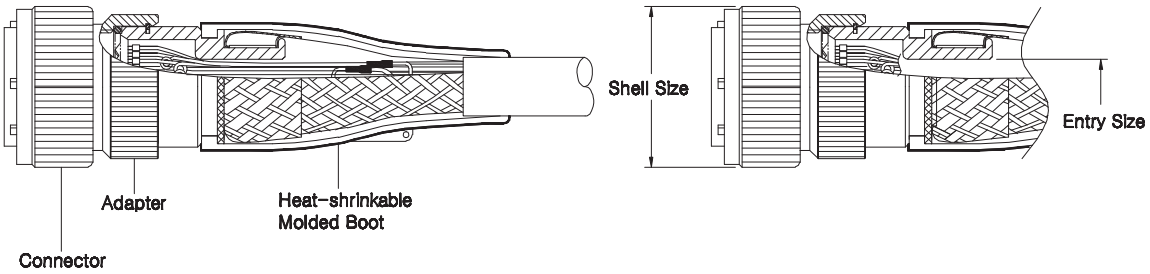

cut-away view showing complete screened cable termination

Features

- Purpose developed backshell incorporating a self tensioning spring.
- Tensile force to pull off braid exceeds 150lbs (68kg). When used in combination with conventional heatshrink strain relief, tensile force required to remove is in excess of 250lbs/113.38kg
- Operator friendly and easy to install
- Constant force spring produces a DC contact resistance at 20° Celsius of less than 1 milliohm, due to 360° contact with the backshell.
- Constant force spring electrical and mechanical characteristics are unaffected by vibration, shock and temperatures between -65° and 150° Celsius.
- Comprehensive Independent witnessed test report available on request, covering Thermal Cycling to MIL-STD-202E Method 107G.Vibration Testing to MIL-STD-176-1. Shock Testing to MIL-STD-1344A Condition G.
- Constant force spring can be used in corrosive atmospheres.
- Constant force spring can be used with single or double braids when used in combination with backshells designed for use with the Zetalock spring.

Benefits

- Spring can be re-opened with no special tools and subsequently re-used.
- Possible to effect repairs to connector pins/sockets without the need to scrap any part of the shielding system.
- Product achieves a 360° screen termination.
- Four sizes of springs cover a range of entry sizes.
- Spring has a pre-set compressive force and so needs no external calibration.
- Constant force spring can be used in conjunction with backshells and braid tails, without the use of swaging equipment, in the factory or in the field.

Selection of Adapter Types

Kukdong offers several types of adapter for unscreened and screened termination systems. The choice is largely dependent upon the screening level required and the braid termination method.

The three principal adapter types are :
1. Tinel-Lock adapter
2. Zetalock adapter
3. Spin-Coupling adapter

Installation - Procedure

- Prepare the cable making sure that a sufficient length of shield is available, so that it fits against the front shoulder of the lip groove

- Before insertion of connector contacts, slide the heat-shrinkable molded boot onto the cable followed by the Zetalock Adapter.

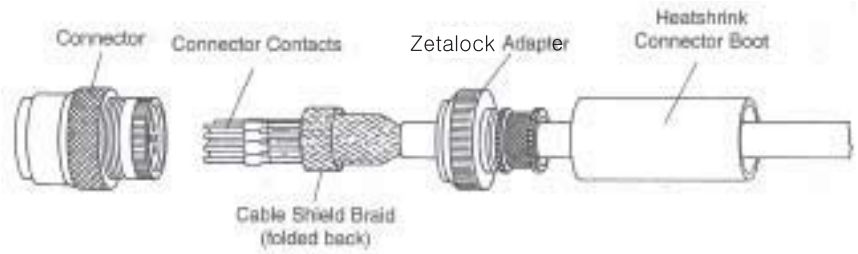

- Position the heatshrinkable boot, Zetalock Adapter and shield braid out of the way and insert the connector contacts. Depending upon the shielding braid size it can either be folded back onto itself or bunched up concertina style out of the way for easy access to the cable conductors.

- Screw the Zetalock Adapter onto the connector and tighten to the torque value specified by the connector manufacturer. Suggested torque values are shown in table on page.20.
  It is recommended that the connector threads are lubricated with a suitable compound if a liquid thread lock is not used.
  The adapter should be hand tightened to ensure proper thread alignment and then tightened with a strap wrench and torque meter to the specified torque.

- Bring the cable shield braid up onto the adapter body so that it fits against the front shoulder of the lip groove. Alternatively extend the braid past the lip groove.

- Open up the constant force spring and wrap it around the cable braid section that is positioned over the constant force spring slot area of the adapter. This is most easily accomplished by lifting up the end of the spring and trapping the braid covered adapter between the spring coil and raised end.
  The spring will now stay in place and can be installed by simply rolling the spring coil around the braid covered adapter.
  Refer to appropriate code of practice for procedure to install heatshrink shape.

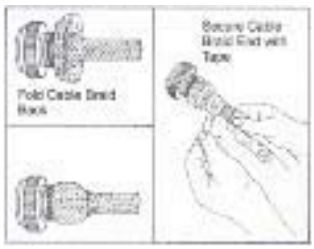

- NOTE : After assembly, braid can be trimmed with side cutters or folded back and secured with high temperature tape.

Spring Coil Ref and Entry Size

The Spring coil ref entry must be specified according to the type of cable braid used, and is added to the part number after the adapter entry size.

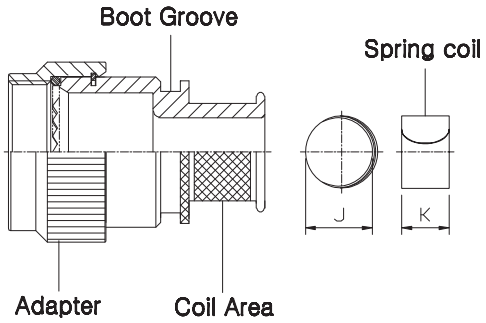

Entry Size	Spring coil ref	J	K
03, 04	HE 050	7.3	9.5
05, 06, 07	HE 100	9.2	
08, 09, 10, 11	HE 200	14.5	
12, 13, 14, 15, 16	HE 300	18.5	
17, 18, 19, 20, 21, 22, 23, 24	HE 400	25.0	9.5

Braid type, material and construction are variable. If in doubt, contact Kukdong for more information.

Cross Reference Chart

Entry Size	Knurl Dia øY ±0.1	Bore Dia øZ +0.1	Entry Size	Knurl Dia øY ±0.1	Bore Dia øZ +0.1
03	14.0	4.7	14	29.8	22.2
04	14.0	6.3	15	31.4	23.8
05	15.6	7.9	16	33.0	25.4
06	17.2	9.5	17	34.6	27.0
07	18.8	11.1	18	36.2	28.5
08	20.3	12.7	19	37.8	30.1
09	21.9	14.3	20	39.3	31.7
10	23.5	15.9	21	40.9	33.3
11	25.1	17.5	22	42.5	34.9
12	26.7	19.0	23	44.1	36.5
13	28.3	20.6	24	45.7	38.1

Adapter Suggested Torque

Connector Shell Size	Suggested Torque	
	In-lb	N.m
8 & 9	35-40	3.92-4.48
10 & 11	45-50	5.04-5.60
12 & 13	55-60	6.16-6.72
14 & 15	65-70	7.28-7.84
16 & 17	75-80	8.40-8.96
18 & 19	85-90	9.52-10.08
20 & 21	95-100	10.64-11.20
22 & 23	105-110	11.76-12.32
24 & 25	115-120	12.88-13.44
28	125-130	14.00-14.56
32	145-150	16.24-16.80
36	170-175	19.04-19.60
40	185-190	20.72-21.28

Note : Check connector manufacturer's recommended values!

Part Number Explanation

Zetalock Adapter

KHQ 1-28-10-1-B

Finish
- B - Cadmium QQ-P-416, Type II, Class 3 over electroless nickel
- C - Nickel Plating
- J - Passivated

Material
- 1 - Aluminium alloy
- 2 - Stainless steel

Entry Size

Entry Size	spring coil ref
03, 04	-HE050
05, 06, 07	-HE100
08, 09, 10, 11	-HE200
12, 13, 14, 15, 16	-HE300
17, 18, 19, 20, 21, 22, 23, 24	-HE400

Shell Size

08-8,9	10-10SL,10,11	12-12s,12,13	14-14s,14,15	16-16s,16,17
18-18,19	20-20,21	22-22,23	24-24,25	
28-28	32-32	36-36	40-40	

Angle
- 1 - ∠0°
- 2- ∠45°
- 3- ∠90°

Connector Code
- A - MIL-DTL-5015 II
  MIL-DTL-26482 II
  MIL-DTL-81703 III
  MIL-DTL-83723 I & III
- C - MIL-DTL-5015 I (With endbell)
- D - MIL-DTL-26482 I (MS3110, MS3116)
- F - MIL-DTL-38999 I & II
- H - MIL-DTL-38999 III & IV
- K - MIL-DTL-26482 I (MS3114)
- L - MIL-DTL-5015 I
- Q - KDB Connector

Zetalock Adapter

Company Prefix (KUKDONG)

Zetalock Adapter Code A (MIL-DTL-5015 Series II (MS3400), MIL-DTL-26482 Series II MIL-DTL-81703 Series III, MIL-DTL-83723 Series I & III)

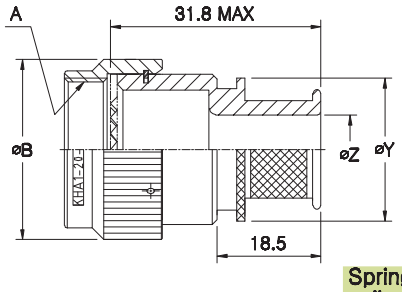

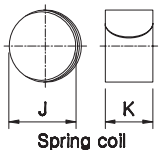

Spring coil ref	J	K
HE 050	7.3	9.5
HE 100	9.2	
HE 200	14.5	
HE 300	18.5	
HE 400	25.0	9.5

KHA1-XX-XX-X-X

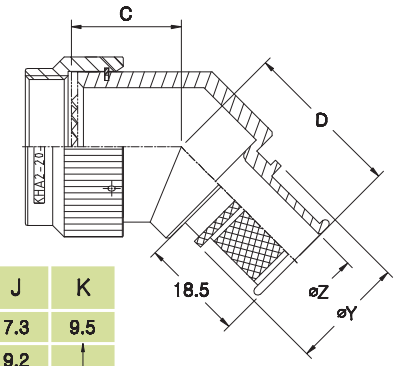

KHA2-XX-XX-X-X

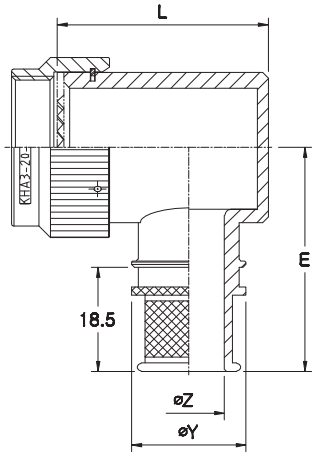

KHA3-XX-XX-X-X

KHA1 - 20 - 10 - 1 - B

- Finish
  - B : Cadmium QQ-P-416, Type II, Class 3 over electroless nickel
  - C : Nickel Plating
  - J : Passivated
- Material
  - 1 : Aluminium alloy
  - 4 : Stainless steel
- Entry Size
- Shell Size
- Angle
  - 1 : 0° , 2 : 45° , 3 : 90°
- Connector Code
- Zetalock Adapter
- Company Prefix (KUKDONG)

Entry Size	øY ±0.1	øZ +0.1 0	Spring coil ref	Entry Size	øY ±0.1	øZ +0.1 0	Spring coil ref
03	14.0	4.7	HE 050	14	29.8	22.2	HE 300
04	14.0	6.3	HE 050	15	31.4	23.8	HE 300
05	15.6	7.9	HE 100	16	33.0	25.4	HE 300
06	17.2	9.5	HE 100	17	34.6	27.0	HE 400
07	18.8	11.1	HE 100	18	36.2	28.5	HE 400
08	20.3	12.7	HE 200	19	37.8	30.1	HE 400
09	21.9	14.3	HE 200	20	39.3	31.7	HE 400
10	23.5	15.9	HE 200	21	40.9	33.3	HE 400
11	25.1	17.5	HE 200	22	42.5	34.9	HE 400
12	26.7	19.0	HE 300	23	44.1	36.5	HE 400
13	28.3	20.6	HE 300	24	45.7	38.1	HE 400

Shell Size MIL-DTL-26482 II	Shell Size MIL-DTL-5015G	A THD-2B	øB MAX	C MAX	D MAX	E MAX	L MAX	Entry MAX
8		1/2-20UNF	17.1	17.5	26.5	33.0	25.0	04
10	10SL	5/8-24UNEF	20.6	17.5	26.5	34.5	27.0	06
12	12s & 12	3/4-20UNEF	23.5	18.0	26.5	36.0	29.5	08
14	14s & 14	7/8-20UNEF	26.5	19.0	28.0	37.5	31.0	08
16	16s & 16	1 -20UNEF	29.3	19.5	28.5	39.0	34.5	10
18	18	1 1/16-18UNEF	30.9	20.0	29.0	40.0	37.5	12
20	20	1 3/16-18UNEF	34.9	20.5	29.5	41.5	42.5	14
22	22	1 5/16-18UNEF	38.0	21.0	30.0	43.0	44.5	16
24	24	1 7/16-18UNEF	41.5	22.5	31.5	44.5	45.5	18
	28	1 3/4-18UNS	47.9	23.0	38.0	54.2	53.5	22
	32	2 -18UNS	53.7	24.5	39.5	57.3	55.0	24
	36	2 1/4-16UN	60.6	26.0	41.0	60.6	65.5	24

Zetalock Adapter Code C (MIL-DTL-5015 series I, With Endbell)

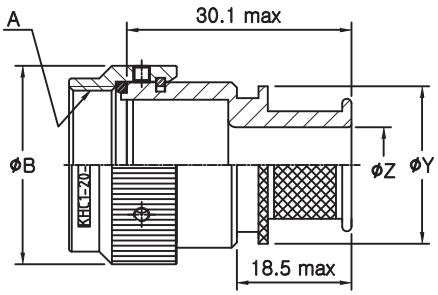

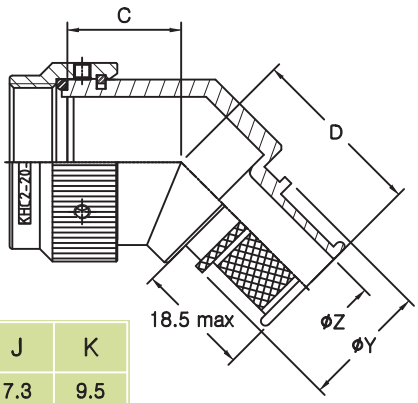

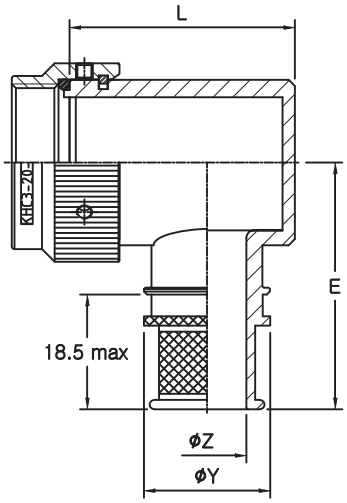

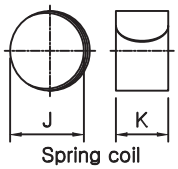

Spring coil ref	J	K
HE 050	7.3	9.5
HE 100	9.2	
HE 200	14.5	
HE 300	18.5	
HE 400	25.0	9.5

KHC1-XX-XX-X-X

KHC2-XX-XX-X-X

KHC3-XX-XX-X-X

KHC1 - 20 - 10 - 1 - B

- Finish
  - B - Cadmium QQ-P-416, Type II, Class 3 over electroless nickel
  - C - Nickel Plating
  - J - Passivated
- Material
  - 1 - Aluminium alloy
  - 4 - Stainless steel
- Entry Size
- Shell Size
- Angle
  - 1 - ∠0°, 2 - ∠45°, 3 - ∠90°
- Connector Code
- Zetalock Adapter
- Company Prefix (KUKDONG)

Entry Size	ØY ±0.1	ØZ $^{+0.1}_{0}$	Spring coil ref
03	14.0	4.7	HE 050
04	14.0	6.3	HE 050
05	15.6	7.9	HE 100
06	17.2	9.5	HE 100
07	18.8	11.1	HE 100
08	20.3	12.7	HE 200
09	21.9	14.3	HE 200
10	23.5	15.9	HE 200
11	25.1	17.5	HE 200
12	26.7	19.0	HE 300
13	28.3	20.6	HE 300

Entry Size	ØY ±0.1	ØZ $^{+0.1}_{0}$	Spring coil ref
14	29.8	22.2	HE 300
15	31.4	23.8	HE 300
16	33.0	25.4	HE 300
17	34.6	27.0	HE 400
18	36.2	28.5	HE 400
19	37.8	30.1	HE 400
20	39.3	31.7	HE 400
21	40.9	33.3	HE 400
22	42.5	34.9	HE 400
23	44.1	36.5	HE 400
24	45.7	38.1	HE 400

Shell Size	A THD-2B	ØB MAX	C MAX	D MAX	E MAX	L MAX	Entry MAX
10SL, 12s & 12	5/8-24UNEF	23.1	17.5	26.5	33.5	37.0	07
14s & 14	3/4-20UNEF	26.4	18.0	26.5	35.0	39.0	08
16s & 16	7/8-20UNEF	29.5	19.0	28.0	38.5	41.0	10
18	1 -20UNEF	34.0	20.0	28.5	40.0	45.0	12
20, 22	1 3/16-18UNEF	37.3	21.0	30.5	43.0	51.5	16
24, 28	1 7/16-18UNEF	46.2	23.5	32.5	49.5	58.0	20
32	1 3/4-18UNS	54.9	24.5	33.5	51.0	64.5	24
36	2 -18UNS	62.0	27.5	35.0	54.5	64.5	24

Zetalock Adapter Code D (MIL-DTL-26482 Series I)

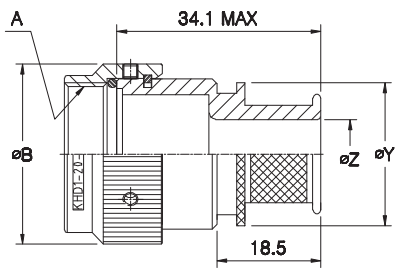

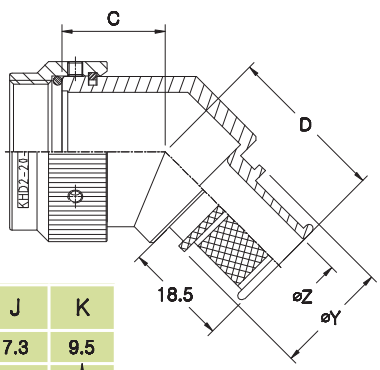

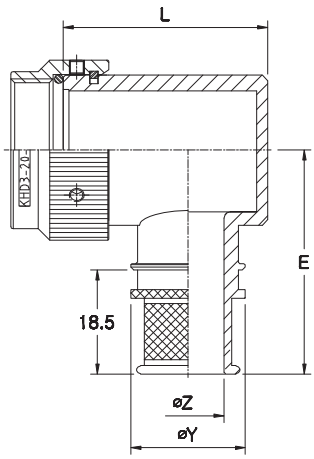

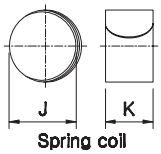

Spring coil ref	J	K
HE 050	7.3	9.5
HE 100	9.2	
HE 200	14.5	
HE 300	18.5	
HE 400	25.0	9.5

KHD1-XX-XX-X-X

KHD2-XX-XX-X-X

KHD3-XX-XX-X-X

KHD1 - 20 - 10 -1 - B

- Finish
  - B : Cadmium QQ-P-416, Type II, Class 3 over electroless nickel
  - C : Nickel Plating
  - J : Passivated
- Material
  - 1 : Aluminium alloy
  - 4 : Stainless steel
- Entry Size
- Shell Size
- Angle
  - 1 : 0° , 2 : 45° , 3 : 90°
- Connector Code
- Zetalock Adapter
- Company Prefix (KUKDONG)

Entry Size	øY ±0.1	øZ $^{+0.1}_{0}$	Spring coil ref	Entry Size	øY ±0.1	øZ $^{+0.1}_{0}$	Spring coil ref
03	14.0	4.7	HE 050	14	29.8	22.2	HE 300
04	14.0	6.3	HE 050	15	31.4	23.8	HE 300
05	15.6	7.9	HE 100	16	33.0	25.4	HE 300
06	17.2	9.5	HE 100	17	34.6	27.0	HE 400
07	18.8	11.1	HE 100	18	36.2	28.5	HE 400
08	20.3	12.7	HE 200	19	37.8	30.1	HE 400
09	21.9	14.3	HE 200	20	39.3	31.7	HE 400
10	23.5	15.9	HE 200	21	40.9	33.3	HE 400
11	25.1	17.5	HE 200	22	42.5	34.9	HE 400
12	26.7	19.0	HE 300	23	44.1	36.5	HE 400
13	28.3	20.6	HE 300	24	45.7	38.1	HE 400

Shell Size	A THD-2B	øB MAX	C MAX	D MAX	E MAX	L MAX	Entry MAX
8	7/16-28UNEF	18.3	14.5	22.0	32.5	25.5	04
10	9/16-24UNEF	21.5	15.5	23.0	34.5	28.5	06
12	11/16-24UNEF	24.7	16.0	23.5	36.0	32.0	08
14	13/16-20UNEF	28.0	16.5	24.0	37.5	35.5	10
16	15/16-20UNEF	31.2	17.0	25.0	38.0	38.5	12
18	1 1/16-18UNEF	34.3	17.5	25.5	39.0	42.0	12
20	1 3/16-18UNEF	37.5	18.5	26.0	41.5	45.5	14
22	1 5/16-18UNEF	40.7	19.0	26.5	43.0	48.5	16
24	1 7/16-18UNEF	43.9	20.0	27.5	43.5	51.5	18

Zetalock Adapter Code F (MIL-DTL-38999 Series I & II)

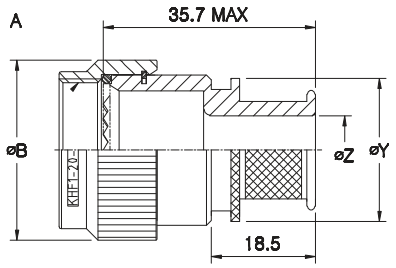

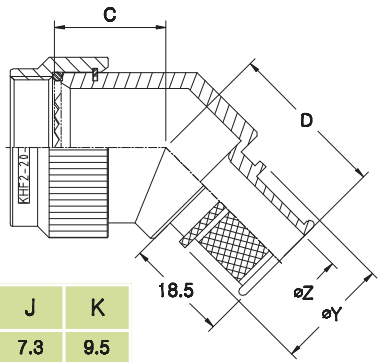

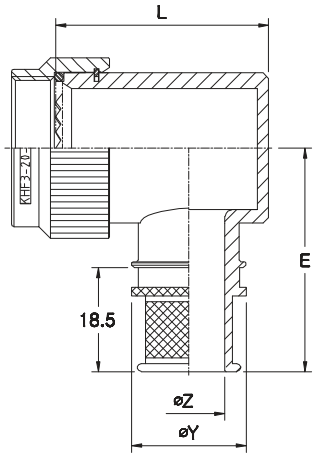

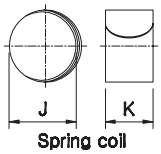

Spring coil ref	J	K
HE 050	7.3	9.5
HE 100	9.2	
HE 200	14.5	
HE 300	18.5	
HE 400	25.0	9.5

KHF1-XX-XX-X-X

KHF2-XX-XX-X-X

KHF3-XX-XX-X-X

KHF1 – 20 – 10 – 1 – B

- Finish
  - B : Cadmium QQ-P-416, Type II, Class 3 over electroless nickel
  - C : Nickel Plating
  - J : Passivated
- Material
  - 1 : Aluminium alloy
  - 4 : Stainless steel
- Entry Size
- Shell Size
- Angle
  - 1 : 0° , 2 : 45° , 3 : 90°
- Connector Code
- Zetalock Adapter
- Company Prefix (KUKDONG)

Entry Size	øY ±0.1	øZ $^{+0.1}_{0}$	Spring coil ref
03	14.0	4.7	HE 050
04	14.0	6.3	HE 050
05	15.6	7.9	HE 100
06	17.2	9.5	HE 100
07	18.8	11.1	HE 100
08	20.3	12.7	HE 200
09	21.9	14.3	HE 200
10	23.5	15.9	HE 200
11	25.1	17.5	HE 200
12	26.7	19.0	HE 300
13	28.3	20.6	HE 300

Entry Size	øY ±0.1	øZ $^{+0.1}_{0}$	Spring coil ref
14	29.8	22.2	HE 300
15	31.4	23.8	HE 300
16	33.0	25.4	HE 300
17	34.6	27.0	HE 400
18	36.2	28.5	HE 400
19	37.8	30.1	HE 400
20	39.3	31.7	HE 400
21	40.9	33.3	HE 400
22	42.5	34.9	HE 400
23	44.1	36.5	HE 400
24	45.7	38.1	HE 400

Order No.	Shell Size		A THD-2B	øB MAX	C MAX	D MAX	E MAX	L MAX	Entry MAX
	Series I	Series II							
08	9	8	7/16-28UNEF	18.3	14.5	22.0	32.5	23.0	04
10	11	10	9/16-24UNEF	21.5	15.5	23.0	34.5	28.5	06
12	13	12	11/16-24UNEF	24.5	16.0	23.5	36.0	32.0	08
14	15	14	13/16-20UNEF	27.8	16.5	24.0	37.5	35.5	10
16	17	16	15/16-20UNEF	30.8	17.0	25.0	38.0	38.5	12
18	19	18	1 1/16-18UNEF	34.1	17.5	25.5	39.0	42.0	12
20	21	20	1 3/16-18UNEF	37.3	18.5	26.0	41.5	45.5	14
22	23	22	1 5/16-18UNEF	40.5	19.0	26.5	43.0	48.5	16
24	25	24	1 7/16-18UNEF	43.7	20.0	27.5	43.5	51.5	18

Zetalock Adapter Code H (MIL-DTL-38999 Series III & IV)

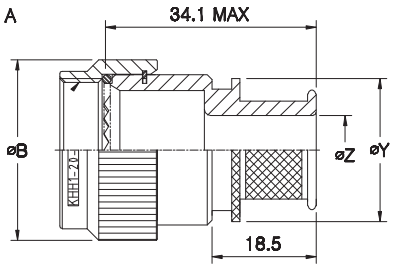

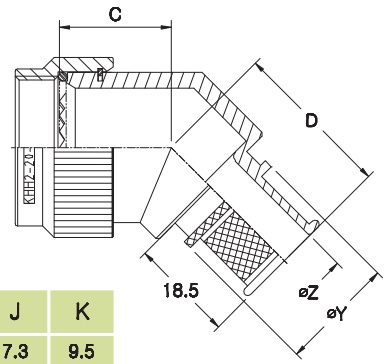

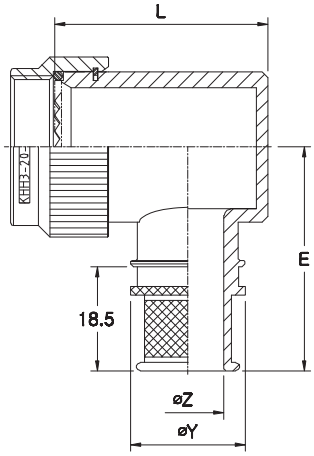

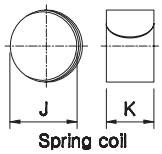

Spring coil ref	J	K
HE 050	7.3	9.5
HE 100	9.2	
HE 200	14.5	
HE 300	18.5	
HE 400	25.0	9.5

KHH1-XX-XX-X-X

KHH2-XX-XX-X-X

KHH3-XX-XX-X-X

KHH1 - 20 - 10 - 1 - B

- Finish
  - B : Cadmium QQ-P-416, Type II, Class 3 over electroless nickel
  - C : Nickel Plating
  - J : Passivated
- Material
  - 1 : Aluminium alloy
  - 4 : Stainless steel
- Entry Size
- Shell Size
- Angle
  - 1 : 0° , 2 : 45° , 3 : 90°
- Connector Code
- Zetalock Adapter
- Company Prefix (KUKDONG)

Entry Size	øY ±0.1	øZ +0.1 0	Spring coil ref	Entry Size	øY ±0.1	øZ +0.1 0	Spring coil ref
03	14.0	4.7	HE 050	14	29.8	22.2	HE 300
04	14.0	6.3	HE 050	15	31.4	23.8	HE 300
05	15.6	7.9	HE 100	16	33.0	25.4	HE 300
06	17.2	9.5	HE 100	17	34.6	27.0	HE 400
07	18.8	11.1	HE 100	18	36.2	28.5	HE 400
08	20.3	12.7	HE 200	19	37.8	30.1	HE 400
09	21.9	14.3	HE 200	20	39.3	31.7	HE 400
10	23.5	15.9	HE 200	21	40.9	33.3	HE 400
11	25.1	17.5	HE 200	22	42.5	34.9	HE 400
12	26.7	19.0	HE 300	23	44.1	36.5	HE 400
13	28.3	20.6	HE 300	24	45.7	38.1	HE 400

Order No.	Shell Size		A THD-2B	øB MAX	C MAX	D MAX	E MAX	L MAX	Entry MAX
	Commercial	Military							
08	9	A	M12 x 1.0	19.5	17.0	22.0	32.5	22.5	04
10	11	B	M15 x 1.0	23.0	18.0	23.0	34.5	26.0	07
12	13	C	M18 x 1.0	25.8	18.6	23.5	36.0	29.0	08
14	15	D	M22 x 1.0	30.2	19.0	24.0	37.5	32.0	10
16	17	E	M25 x 1.0	33.0	20.0	25.0	39.0	35.5	12
18	19	F	M28 x 1.0	35.8	20.5	25.5	39.5	39.5	14
20	21	G	M31 x 1.0	39.1	21.0	26.0	41.5	42.0	16
22	23	H	M34 x 1.0	42.3	21.5	26.5	43.0	45.0	18
24	25	J	M37 x 1.0	45.0	22.5	27.5	43.5	48.0	20

Zetalock Adapter Code K (MIL-DTL-26482 Series I)

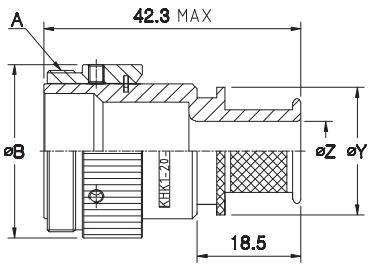

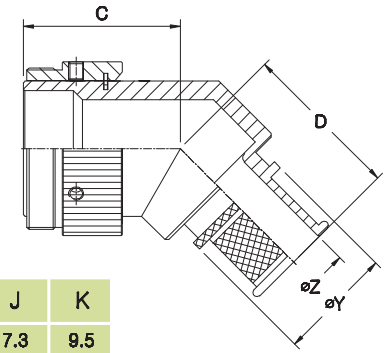

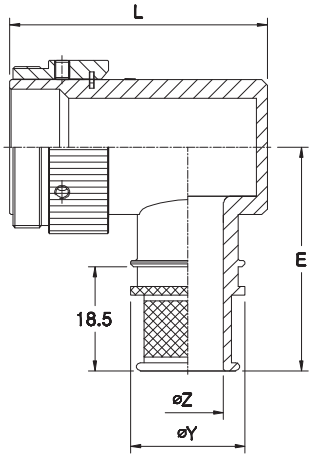

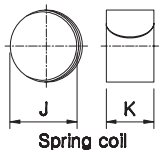

Spring coil ref	J	K
HE 050	7.3	9.5
HE 100	9.2	
HE 200	14.5	
HE 300	18.5	
HE 400	25.0	9.5

KHK1-XX-XX-X-X

KHK2-XX-XX-X-X

KHK3-XX-XX-X-X

KHK1 – 20 – 10 – 1 – B

- Finish
  - B : Cadmium QQ-P-416, Type II, Class 3 over electroless nickel
  - C : Nickel Plating
  - J : Passivated
- Material
  - 1 : Aluminium alloy
  - 4 : Stainless steel
- Entry Size
- Shell Size
- Angle
  - 1 : 0° , 2 : 45° , 3 : 90°
- Connector Code
- Zetalock Adapter
- Company Prefix (KUKDONG)

Entry Size	øY ±0.1	øZ $^{+0.1}_{0}$	Spring coil ref	Entry Size	øY ±0.1	øZ $^{+0.1}_{0}$	Spring coil ref
03	14.0	4.7	HE 050	14	29.8	22.2	HE 300
04	14.0	6.3	HE 050	15	31.4	23.8	HE 300
05	15.6	7.9	HE 100	16	33.0	25.4	HE 300
06	17.2	9.5	HE 100	17	34.6	27.0	HE 400
07	18.8	11.1	HE 100	18	36.2	28.5	HE 400
08	20.3	12.7	HE 200	19	37.8	30.1	HE 400
09	21.9	14.3	HE 200	20	39.3	31.7	HE 400
10	23.5	15.9	HE 200	21	40.9	33.3	HE 400
11	25.1	17.5	HE 200	22	42.5	34.9	HE 400
12	26.7	19.0	HE 300	23	44.1	36.5	HE 400
13	28.3	20.6	HE 300	24	45.7	38.1	HE 400

Shell Size	A THD-2A	øB MAX	C MAX	D MAX	E MAX	L MAX	Entry MAX
8	5/8-24UNEF	19.8	24.0	27.0	32.0	43.5	04
10	3/4-20UNEF	23.1	24.5	28.0	33.5	46.0	06
12	7/8-20UNEF	26.2	25.0	28.5	35.5	49.5	08
14	1 -20UNEF	29.5	26.0	29.0	37.0	52.5	10
16	1 1/8-18UNEF	32.5	26.5	29.5	38.5	55.5	12
18	1 1/4-18UNEF	35.8	27.0	30.5	40.0	59.0	14
20	1 3/8-18UNEF	38.9	29.0	31.0	41.0	59.0	14
22	1 1/2-18UNEF	42.2	29.5	31.5	43.5	65.0	18
24	1 5/8-18UNEF	45.2	30.5	32.0	45.0	65.0	18

Zetalock Adapter Code L (MIL-DTL-5015)

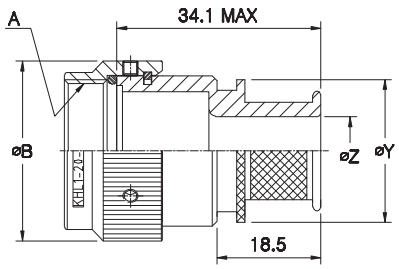

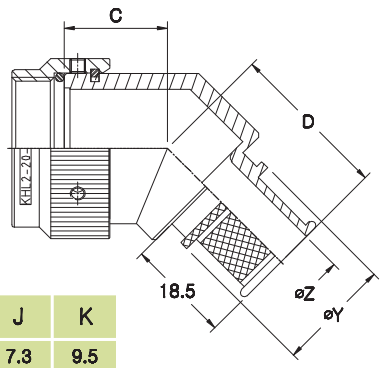

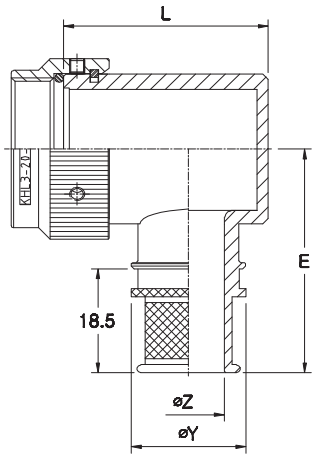

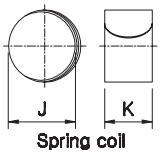

Spring coil ref	J	K
HE 050	7.3	9.5
HE 100	9.2	
HE 200	14.5	
HE 300	18.5	
HE 400	25.0	9.5

KHL1-XX-XX-X-X

KHL2-XX-XX-X-X

KHL3-XX-XX-X-X

KHL1 - 20 - 10 - 1 - B

- Finish
  - B : Cadmium QQ-P-416, Type II, Class 3 over electroless nickel
  - C : Nickel Plating
  - J : Passivated
- Material
  - 1 : Aluminium alloy
  - 4 : Stainless steel
- Entry Size
- Shell Size
- Angle
  - 1 : 0° , 2 : 45° , 3 : 90°
- Connector Code
- Zetalock Adapter
- Company Prefix (KUKDONG)

Entry Size	øY ±0.1	øZ +0.1 0	Spring coil ref
03	14.0	4.7	HE 050
04	14.0	6.3	HE 050
05	15.6	7.9	HE 100
06	17.2	9.5	HE 100
07	18.8	11.1	HE 100
08	20.3	12.7	HE 200
09	21.9	14.3	HE 200
10	23.5	15.9	HE 200
11	25.1	17.5	HE 200
12	26.7	19.0	HE 300
13	28.3	20.6	HE 300

Entry Size	øY ±0.1	øZ +0.1 0	Spring coil ref
14	29.8	22.2	HE 300
15	31.4	23.8	HE 300
16	33.0	25.4	HE 300
17	34.6	27.0	HE 400
18	36.2	28.5	HE 400
19	37.8	30.1	HE 400
20	39.3	31.7	HE 400
21	40.9	33.3	HE 400
22	42.5	34.9	HE 400
23	44.1	36.5	HE 400
24	45.7	38.1	HE 400

Shell Size	A THD-2B	øB MAX	C MAX	D MAX	E MAX	L MAX	Entry MAX
10SL	9/16-24UNEF	21.5	17.5	26.5	34.0	27.5	07
12s & 12	5/8-24UNEF	21.5	17.5	26.5	34.0	27.5	08
14s & 14	3/4-20UNEF	24.9	18.0	26.5	35.0	29.0	10
16s & 16	7/8-20UNEF	28.1	19.0	28.0	36.0	32.5	12
18	1 -20UNEF	31.5	19.5	28.5	37.5	35.0	12
20	1 1/8-18UNEF	36.9	20.0	29.0	39.0	40.5	16
22	1 1/4-18UNEF	40.8	20.5	29.5	41.0	42.5	18
24	1 3/8-18UNEF	50.5	21.0	30.0	46.0	46.5	20
28	1 5/8-18UNEF	54.5	22.5	31.5	48.0	50.0	24
32	1 7/8-16UN	55.2	23.0	38.0	48.0	58.5	24
36	2 1/8-16UN	64.0	24.5	39.5	52.0	64.0	24

Zetalock Adapter Code Q (KDB Connector)

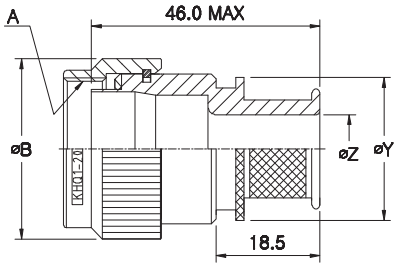

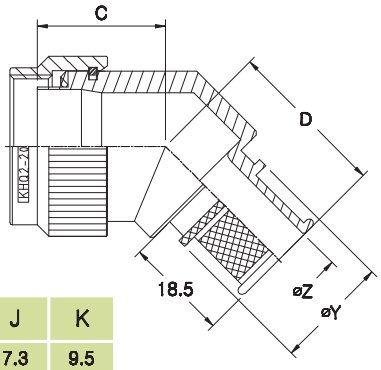

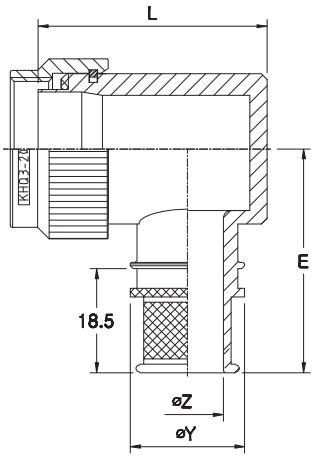

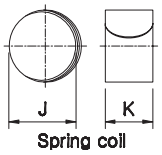

Spring coil ref	J	K
HE 050	7.3	9.5
HE 100	9.2	
HE 200	14.5	
HE 300	18.5	
HE 400	25.0	9.5

KHQ1-XX-XX-X-X

KHQ2-XX-XX-X-X

KHQ3-XX-XX-X-X

KHQ1 - 20 - 10 - 1 - B

- Finish
  - B : Cadmium QQ-P-416, Type II, Class 3 over electroless nickel
  - C : Nickel Plating
  - J : Passivated
- Material
  - 1 : Aluminium alloy
  - 4 : Stainless steel
- Entry Size
- Shell Size
- Angle
  - 1 : 0° , 2 : 45° , 3 : 90°
- Connector Code
- Zetalock Adapter
- Company Prefix (KUKDONG)

Entry Size	øY ±0.1	øZ +0.1 0	Spring coil ref
03	14.0	4.7	HE 050
04	14.0	6.3	HE 050
05	15.6	7.9	HE 100
06	17.2	9.5	HE 100
07	18.8	11.1	HE 100
08	20.3	12.7	HE 200
09	21.9	14.3	HE 200
10	23.5	15.9	HE 200
11	25.1	17.5	HE 200
12	26.7	19.0	HE 300
13	28.3	20.6	HE 300

Entry Size	øY ±0.1	øZ +0.1 0	Spring coil ref
14	29.8	22.2	HE 300
15	31.4	23.8	HE 300
16	33.0	25.4	HE 300
17	34.6	27.0	HE 400
18	36.2	28.5	HE 400
19	37.8	30.1	HE 400
20	39.3	31.7	HE 400
21	40.9	33.3	HE 400
22	42.5	34.9	HE 400
23	44.1	36.5	HE 400
24	45.7	38.1	HE 400

Shell Size	A THD-2B	øB MAX	C MAX	D MAX	E MAX	L MAX	Entry MAX
10SL	9/16-24UNEF	17.5	17.5	26.0	30.5	21.0	05
12s & 12	5/8-24UNEF	20.5	17.5	26.5	32.5	25.0	06
14s & 14	3/4-20UNEF	24.0	18.0	26.5	34.5	29.0	07
16s & 16	7/8-20UNEF	27.0	19.0	28.0	36.0	32.0	08
18	1 -20UNEF	30.5	19.5	28.5	37.5	35.0	10
20	1 1/8-18UNEF	35.5	20.0	29.0	39.0	38.0	12
22	1 1/4-18UNEF	38.5	20.5	29.5	40.5	41.0	14
24	1 3/8-18UNEF	41.5	21.0	30.0	41.5	44.0	16
28	1 5/8-18UNEF	48.0	22.5	31.5	43.0	47.0	18
32	1 7/8-16UN	54.5	23.0	38.0	43.5	50.0	22
36	2 1/8-16UN	62.5	24.5	39.5	46.0	53.0	24

Tinel-Lock Adapter - Special (Customized)

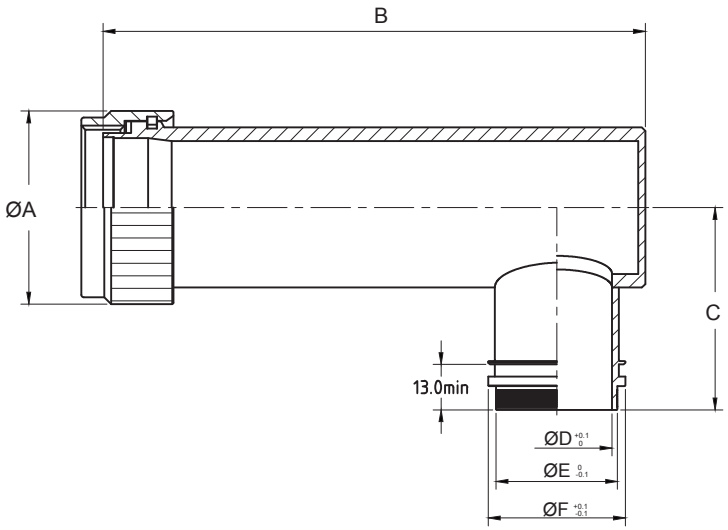

PART NUMBER	ØA MAX	B MAX	C MAX	ØD +0.1 0	ØE 0 -0.1	ØF +0.1 -0.1
KAT58AB90-2214(130)	38.9	131.0	37.0	22.2	25.4	29.8
KAT58AB90-2214(155)	38.9	156.0	37.0	22.2	25.4	29.8
KAT58AB90-3222(163)	54.6	164.0	45.0	34.9	38.1	42.5

Cross Reference Lists

1. Comparison by item number - KAT, TXR Adapters

KAT KAT58AB00-1810AI ↔ **TXR** TXR58AB00-1810AI

KUKDONG	TE (Raychem)
KAT01	TXR01
KAT18	TXR18
KAT21	TXR21
KAT24	TXR24
KAT30	TXR30
KAT32	TXR32
KAT40	TXR40
KAT41	TXR41
KAT47	TXR47
KAT54	TXR54
KAT58	TXR58
KAT71	TXR71
KAT76	TXR76
KAT78	TXR78

MEMO

극동전자정밀주식회사
KUKDONG Electronic Precision Co., Ltd.

제품문의(Customer Inquiry) : webmaster@kdep.co.kr

KUKDONG
www.kdep.co.kr

본사 및 제1공장
인천광역시 서구 원창동 382-81번지
TEL : 032-582-0071 (내선 0번)
FAX : 032-582-0076

Head Office & 1st Factory
#382-81, Wonchang-Dong, Seo-Gu, Incheon, Korea
TEL : +82-(0)32-582-0071 (Ext. 0)
FAX : +82-(0)32-582-0076

제2공장
인천광역시 서구 원창동 382-73번지
TEL : 032-582-0071 (내선 0번)
FAX : 032-582-0075

2nd Factory
#382-73, Wonchang-Dong, Seo-Gu, Incheon, Korea
TEL : +82-(0)32. 582. 0071 (내선 0번)
FAX : +82-(0)32. 582. 0075

Oct. 2011