IWAKI

LK
series

Metering pumps

Applicable to the many diverse needs of chemical feeding

Iwaki's systematic LK series metering pump consists of the worm gear type dual-cam driving section, which is compact yet rigid and reliable, and wet-end materials of which there are seven types for various applications.

Applicable to the many diverse needs of chemical feeding

Iwaki's systematic LK series metering pump consists of the worm gear type dual-cam driving section, which is compact yet rigid and reliable, and wet-end materials of which there are seven types for various applications.
With long and market-proven experience, Iwaki has employed state-of-the-art pump technologies in the development of an ideal type of chemical feeding pump which has advantages such as quality, performance, ease of operation and cost efficiency.
The LK series is suitable for many chemical liquid feeding processes used in a wide range of fields, including water treatment, chemicals, fabrics, paper mill, food processing, and medicine.

Various types and materials

Nine types (IWAKI original motor) and eight general purpose motor types are available to suit each user's needs in accordance with feeding rate from small to large capacity. Also, material variation has been improved. Selection of the pump material most suitable for the applied liquid is possible with seven different types available.

High performance and application-oriented versatile design

Discharge accuracy (stability) is within ±2% FS. Reliability is considerably enhanced through efforts to improve the linearity of the stroke / discharge ratio as well as the dispersion between stroke.
Three types of joints flange, hose and union joints are standardized for the connections. The optimum piping system can be selected. (Only with 0.2kW IWAKI original motor type)

LK-B75S4 LK-B65VC LK-C86VC

Construction

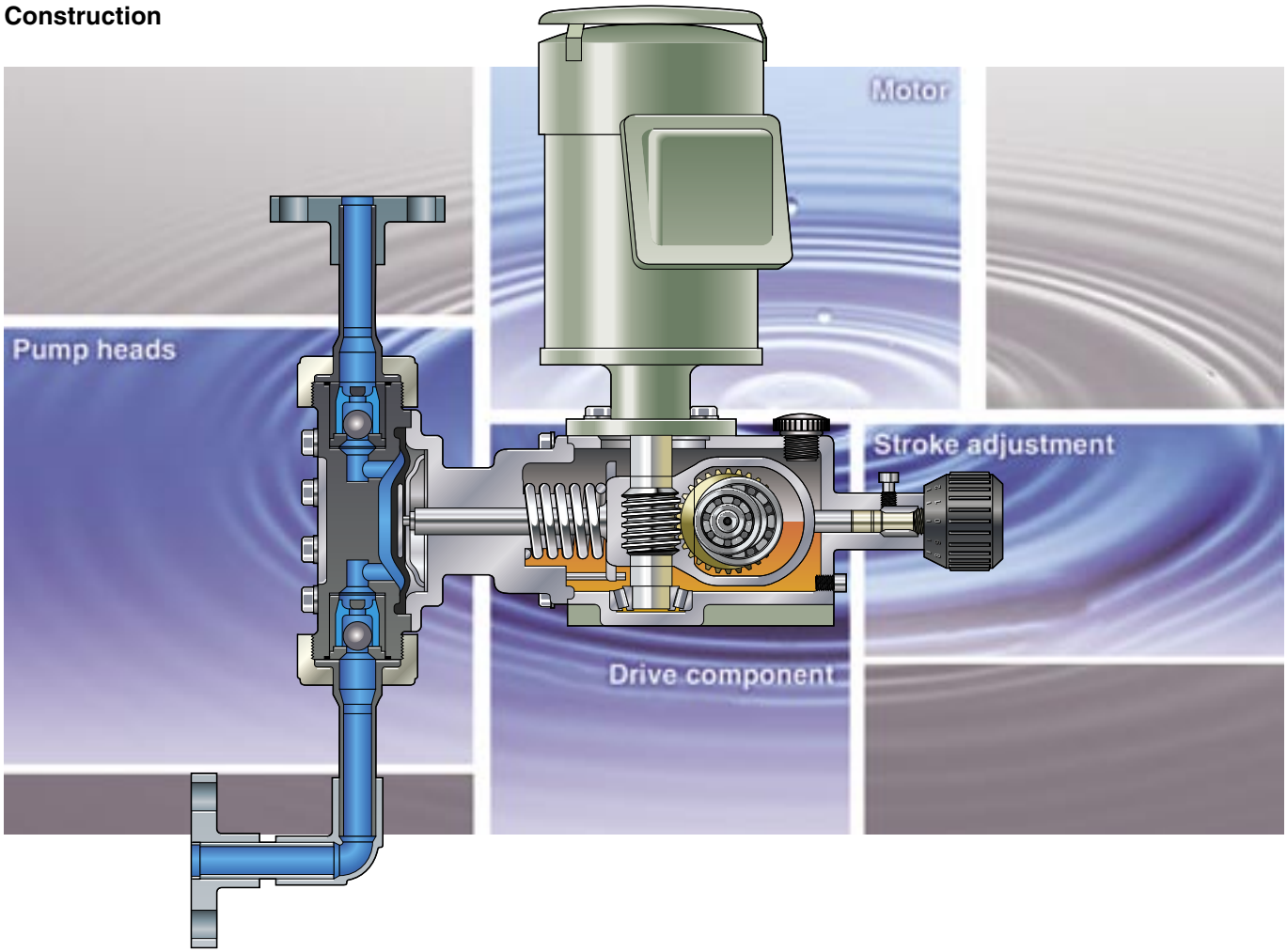

Pump heads

Drive from the gear reduction unit is directly transmitted to the diaphragm. This type of metering pump is economical and simple with a high degree of versatility. With the employment of moulded PVC pump-head, and with the new standardisation of three types of connections using flanges, hose, or union joints (0.2kW type), not only a saving in parts cost but also improved flexibility of installation has been realized. The three main pump head materials are PVC, stainless steel, or fluororesin. The most suitable type for the application can be selected from a total of seven different materials. A wide range of chemicals, such as acid, alkaline, organic solvent, slurry, and high-temperature liquids, is covered by the series.

Note: Please contact us for Model PVdF.

Drive component

The head of the LK series is the dual-cam system driving section with a highly reliable, built-in worm gear type speed reducer. The compact and rigid mechanism is a result of the design goal to achieve maximum wear resistance in continuous operation. In addition to the worm gear which is designed with a considerably large module ratio, the material is aluminium bronze, and a taper roller bearing is used at the end of the worm gear for the efficient transmission of motor power to the pump section. A fully enclosed oil bath lubrication system is employed to permit outdoor installation. The durability in continuous operation over a long period of time is also excellent.

Motor

All of the standard models employ totally enclosed outdoor-use motors which are vertically mounted to save space. The 0.2kW type is an IWAKI original motor, which is installed in the small models of the LK series. Besides the standard 200V, other voltages are available. The LK series pumps of LK-F, LK-A, LK-B, and LK-C can be installed with general-purpose motors, including those for different voltage levels and explosion-proof specifications. Body configurations of the LK series are available in five types. They are an IWAKI original motor type frame and the general-purpose motor type frames, F, A, B and C.

Stroke adjustment

Accurate and reliable stroke setting is possible with the micrometer type dial of the springback type stroke adjustment mechanism. An electric servo unit for automatic process control, such as flow, pressure, pH, temperature, and concentration can be arranged according to the user's needs.

Electric servo system

Specifications

- Input signal :
  DC4 - 20mA (or 1 - 5V)
- Power source :
  AC100V 50/60Hz; other voltage types available
  Voltage fluctuation 10%
- Motor output :
  LK (0.2kW) 15W
  LK-A, B, C 40W

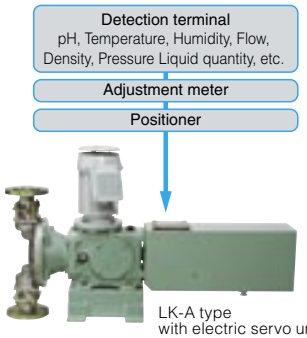

LK-A type
with electric servo unit

Specifications

Model	Capacity L/min Note 1		Max. Pressure MPa Note 2		Stroke speed spm		Efective diaphragm dia. mm	Max. stroke length mm	Connection Note 3			Motor output kW Note 4	Approx net weight kg Note 5	
									Flange (JIS10K) mm	Union	Hose mm			
	50Hz	60Hz	PVC	SUS	50Hz	60Hz							PVC	SUS
LK-11	0.020	0.024	1.0	1.5	48	58	ø22	1.5	15A (PVC) JIS16K (SUS)	VP16 (PVC)	ø4 x ø9 (PVC)	0.2 (Three phase) or 0.25 (Single phase)	12	14
21	0.050	0.060					ø30	2.0						
22	0.10	0.12			96	116								
31	0.25	0.30			48	58	ø60	2.5			ø12 x ø18 (PVC)		12	17
32	0.50	0.60			96	116								
45	0.85	1.00			48	58	ø72	6.0					14	21
47	1.7	2.0	0.8		96	116								
55	2.8	3.3	0.5		48	58	ø100	10	25A	VP25 (PVC)	–		16	26
57	6.0	7.2	0.3		96	116								
LK-A55	2.8	3.3	1.0		48	58	ø100	10	25A	–	–	0.4	63	80
A57	6.0	7.2	0.7		96	116								
A65	9.0	10.8	0.3		48	58	ø138	17.5	40A				70	73
B65	9.0	10.8	0.5	0.7	48	58	ø138	17.5	40A	–	–	0.75	100	100
B75	13.3	16.0	0.5				ø150	20	50A				105	105
C76	20	24	0.5		72	86	ø150	20	50A	–	–	1.5	120	120
C86	33	40	0.3				ø205		65A				140	155
C87	45	54			96	116								

Note 1: The capacity is the value when maximum discharge pressure is applied (with pure water at room temperature). The value may be lager than indicated in the table if the discharge pressure is lower.
As for the liquid conditions pumped and performance. refer to the technical information of this catalogue.
Note 2: The maximum discharge pressure of LK-A models are restricted to 0.7MPa for A55, 0.5MPa for A57 and 0.2MPa for A65 when IEC standard 0.37kW motor is adopted.
Note 3: VS type connection is different in some models from standard.
Note 4: The LK type is equipped with Iwaki original flange motor. The standard is 200V 3-phase, totally enclosed fan-cooled outdoor type.
Other motors for different voltages, explosion-proof motors, or single-phase motors are available.
LK-F, LK-A, B and C are to be installed with general purpose flange motors.
Note 5: The weight is the value when installed with a totally enclosed fan-cooled outdoor motor.
• Standard accessory : A siphon preventing valve, strainer and 4m PVC tube are furnished to hose connection type of simplex LK-11 to LK-45 VH or VC A base is furnished to all LK-A, LK-B and LK-C models.
For LK-(F) 11 to LK-(F) 57 models, the base may be supplied optionally.
• Coating color : C37-60D (JPMA) (However, the motors for LK-F/A/B/C use the maker's standard color.)
• Duplex type : LK-11 to 47 type include duplex types with a special-use integrated drive section.

Materials

LK-11 to LK-57
(Flange type)

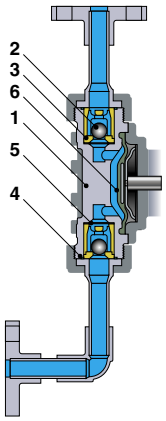

LK-A55 to LK-C87
(Flange type)

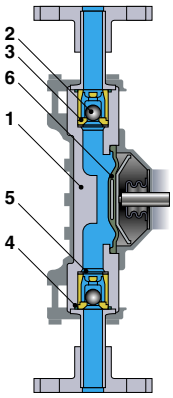

Type		VC	VH	VS4	VS	S6	S4
Application		Acids	Alkalines		Viscosity and Slurry	Solvents	
Applicable type		**11 to 87**	**11 to A57**	**A65 to C87**	**11 to C87**	**11 to A57**	**A65 to C87**
1: Pump head		PVC				SUS316	SCS13
2: Valve ball		CE	HC	SUS304	HC / SUS304	HC	SUS304
3: Valve seat	Type11 to 32	FKM	EPDM	PVC	SUS304	SUS316	SUS304
	Type45 to 87	PVC			SUS304	SUS316	SUS304
4: O ring		FKM	EPDM			–	
5: Valve gasket		PTFE				PTFE	
6: Diaphragm		PTFE + EPDM					

Typical chemical
VC: Sulfuric acid, Hydrochloric acid, Sodium hypochlorite
VH, VS4: Caustic soda, Coagulant. Calcium hydroxide (low density)
VS: Calcium hydroxide, Highmolecular coagulant
S6, S4: Organic solvent, Paper making chemicals

Material symbols
SCS13: Stainless-cast steel equivalent to SUS304
CE: Ceramic
FKM: Fluoro rubber
EPDM: Ethylene propylene rubber
HC: Hastelloy C276

Note 1: Materials of the VS type valve balls are HC for 11 to A57 type and SUS304 for B65 to C87 type.
As for the connection, which is different in some models from standard,
Note 2: A stainless steel pump SE type for latex emulsion is available (LK-31 to 57 type)
Note 3: Material PVdF is also available. Please contact us for details.

Pump identification

2 LK - A 65 VC H - 04 F E S

- **Simplex / Duplex**
  LK (IWAKI original motor type)
  None: Simplex
  2: Duplex (special drive section:LK-11 to 47)
  LK-F/A/B/C (JEM or IEC motor type)
  None: Simplex
- **Series name**
  L series : Mechanical driven diaphragm type
- **Drive section**
  LK (IWAKI original motor type)
  None : IWAKI original motor type 0.2kW / 0.25kW
  LK-F/A/B/C (JEM or IEC motor type)
  F: 0.25 or 0.37 kW (for IEC), 0.4kW
  A: 0.4kW
  B: 0.75kW
  C: 1.5kW
- **Type No.**
  First digit : Diaphragm (pump head size)
  Second digit : Speed-reducing gear ratio **1•5** : 1/30, **2•7** : 1/15, **6**: 1/20
- **Material symbol**
  Refer to the material table
  (Ex. **VC**, **VH**, **VS4**, **VS**, **S6**, **S4**)
- **Joint**
  None : Flange
  U: union (LK-11 to LK-57)
  H: hose (LK-11 to LK-47)
- **Motor output**
  LK (IWAKI original motor type)
  02: 0.2kW, **03**: 0.25kW (single phase)
  LK-F/A/B/C (JEM or IEC motor type)
  04: 0.4kW, **07**: 0.75kW, **15**: 1.5kW
- **Special motor**
  LK-F/A/B/C (JEM or IEC motor type)
  F: Inverter motor
  (Note : General-purpose motors have no explosion-ploof symbol.)
- **Servo unit**
  E: With electric servo unit
- **Special symbol**
  S: Special specification other than standard.

Note 1 : This table dose not introduce the standard combination. Please contact us for details.
Note 2 : In case of pump without motor installation, the above item 7 and 8 are not indicated.

Points to be observed in pump installation and piping

Iwaki metering pump LK series are reciprocating pumps employing the eccentric cam system.
Reciprocating pumps generate pulsation in the suction and discharge piping. Special consideration, (different from the ordinary centrifugal pumps), should be given to this point when planning the pump installation and piping.

• Prevention of pipe vibration

Discharge side inertial resistance Pid < 0.1MPa
• Pid : Inertial resistance on discharge side

Inertial resistance means the pulsated impact force generated by the flow just upon entering discharge stroke. It is a phenomenon particular to a reciprocating pump which is generated as a result of the sudden application of acceleration to the liquid in the discharge piping.
The condition "Pid < 0.1MPa is given above as an approximate standard. If Pid becomes 0.1MPa or higher, vibration on the pipe is generated. So measures should be taken to cope with the influence of vibration on the pump, too.

Measures
1. Install pulsation prevention device (air chamber).
2. Enlarge the diameter and shorten the length of the discharge piping.

• Prevention of overfeeding

Pump differential pressure > Inertial resistance Pi
• The larger one of the suction side or the discharge side

Overfeeding means excessive flow of the liquid due to abnormal functioning of the check valve caused by pulsation of the liquid in the piping. Check carefully in case the differential pressure is low and in case the piping is too long even with the differential pressure value at 0.03MPa.

Measures
1. Install air chamber.
2. Install back pressure valve

• Prevention of suction failure

NPSHa > NPSHr
NPSHa = Pa - Pv ± Phs - Pis * MPa
*Or Pfs : whichever is the larger.
(NPSH : Net positive suction head)

If NPSHa is not sufficient, the pump may be damaged by the flow-break or cavitation generated under such conditions.

• NPSHa : Absolute NPSH (MPa)
• NPSHr : Required NPSH (value particular to the pump) (MPa)
• Pa : Absolute pressure onto the tank liquid surface (MPa)
• PV : Liquid vapour pressure (MPa)
• Phs : Pressure caused by the height of the suction side (MPa)
(Flooded suction : +, Negative suction : –)
• Pis Inertial resistance on the suction side (MPa)
• Pfs Piping resistance on the suction side (MPa)

LK series performance

Model		Viscosity mPa·s		Slurry(Calcium hydroxide) wt%		NPSHr MPaA	Inertial resistance MPa/1m Note 1		Applicable chambers (0.3MPa) Note 2	
		PVC	SUS	PVC	SUS		50Hz	60Hz	PVC	SUS
LK-	11	VC: 300 VH: 500	500	—		0.07	0.001	0.001	1L	0.5L
	21									
	22									
	31		1000	5	15					
	32					0.08	0.003	0.004		
	45			15		0.07	0.002	0.003	2L	1.5L
	47						0.010	0.013		
	55					0.08	0.003	0.004	5L	5L
	57						0.010	0.015		
LK-A	55	500	1000	15		0.08	0.003	0.004	5L	5L
	57						0.010	0.015		
	65						0.004	0.005	10L	10L
LK-B	65	500	1000	15		0.08	0.004	0.005	10L	10L
	75						0.003		20L	20L
LK-C	76	500	1000	15		0.08	0.007	0.009	20L	20L
	86							0.010	20L	20L
	87						0.013	0.020	20L	36L

• Discharge capacity may reduce when sending viscous/slurry liquid. • Dosing flow fluctuation: ±2%FS • Linearity deviation: ±3%FS
• Permissible liquid temperature PVC: 0 - 50˚C, SUS: 0 - 80˚C• Maximum suction lift: 1m at full stroke length • Permissible ambient temperature: 0 - 40˚C • Paint color: C37-60D(JPMA)
Note 1: Inertial resistance Pi is calculated per 1m on condition that the pipeline has the same bore as the pump(by pumping clean water at full stroke length).
Determine the actual Pi by the following formula.
Inertial resistance Pid(Pis)=Applicable Pi on the table×viscosity×actual pipe length(m).....(MPa) (Pid:Discharge side Pi, Pis=Suction side Pi)
If pipe bore is different from the pump bore: Inertial resistance Pid(Pis)=Applicable Pi on the table×specific gravity×actual pipe length×(Pump bore÷pipe bore)^2.....(MPa)
Note 2: Applicable chamber: Chamber volume is based on IWAKI's standard chambers.

LK-VS type (Viscosity/slurry)

Model	Connection		Viscosity mPa·s	Slurry wt%	Materials	
	flange	hose			valve seat	valve guide
LK-11VS	15A	*ø12 x ø18	1000	5	*SUS304	*PVC (For VS)
2□VS				15		
3□VS		Normal				PVC (Normal)
45VS						
47VS	*25A	*Hose cannot be used				
5□VS	25A (Normal)	—				

Note 1: The information marked with * are for the VS type only.
Note 2: Suction-side piping should be flooded suction system.

Model	Connection	Viscosity mPa·s	Slurry wt%	Materials	
	flange			valve seat	valve guide
LK-A□VS B□VS C□VS	See the standard flange connection	1000	5	*SUS304	PVC (Normal)

Inverter control of LK series

In case of inverter-applied control of the discharge, the control range may be different according to the types or the pressure employed.

List of the specifications for the selection of LK series inverter control system

Model		Capacity Full stroke length L/min Note 1	Max. Pressure MPa PVC, PVDF	Max. Pressure MPa SUS	Control range Note 2	Stroke speed spm	Inverter frequency Hz	Motor Note 3	Description
LK-	11	0.008 - 0.032	1.0	1.5	1 : 4	19 - 78	20 - 80	0.2kW Standard motor (IWAKI original flange motor)	1. The frequency less than the lowest in the table cannot be used as unstable rotation of motor is expected. 2. Drive over the max. frequency cannot be made. 3. Inverter motor cannot be installed.
	21	0.02 - 0.08	1.0	1.5	1 : 4	19 - 78	20 - 80		
	22	0.04 - 0.12	1.0	1.5	1 : 3	38 - 116	20 - 60		
	31	0.10 - 0.40	1.0	1.5	1 : 4	19 - 78	20 - 80		
	32	0.20 - 0.60	1.0	1.5	1 : 3	38 - 116	20 - 60		
	45	0.33 - 1.3	0.8	0.8	1 : 4	19 - 78	20 - 80		
	47	0.66 - 2.0	0.8	0.8	1 : 3	38 - 116	20 - 60		
	55	1.37 - 4.4	0.3	0.3	1 : 3.2	24 - 78	25 - 80		
	57	3.6 - 7.2	0.3	0.3	1 : 2	58 - 116	30 - 60		
LK-F	11	0.005 - 0.024	1.0	1.5	1 : 5	11 - 58	12 - 60	0.4kW Inverter motor (VF motor)	1. The frequency less than the lowest should not cause trouble in operation. However, such a level may affect the stability of the pump's performance.
	21	0.012 - 0.06	1.0	1.5	1 : 5	11 - 58	12 - 60		
	22	0.02 - 0.12	1.0	1.5	1 : 6	19 - 116	10 - 60		
	31	0.06 - 0.30	1.0	1.5	1 : 5	11 - 58	12 - 60		
	32	0.10 - 0.60	1.0	1.5	1 : 6	19 - 116	10 - 60		
	45	0.2 - 1.0	1.0	1.5	1 : 5	11 - 58	12 - 60		
	47	0.33 - 2.0	0.8	0.8	1 : 6	19 - 116	10 - 60		
	55	0.66 - 3.3	0.5	0.5	1 : 5	11 - 58	12 - 60		
	57	1.2 - 7.2	0.3	0.5	1 : 6	19 - 116	10 - 60		
LK-A	55	1.1 - 4.4	0.3	0.3	1 : 4	20 - 78	20 - 80	0.4kW Inverter motor (VF motor)	1. The frequency less than the lowest cannot be used as unstable motor rotation of motor is expected. 2. Drive over the max. frequency cannot be used.
		1.4 - 4.4	0.5	0.5	1 : 3.2	25 - 78	25 - 80		
	57	1.8 - 7.2	0.3	0.3	1 : 4	29 - 116	15 - 60		
		3.6 - 7.2	0.5	0.5	1 : 2	58 - 116	30 - 60		
	65	4.5 - 14.4	0.2	0.2	1 : 3.2	25 - 78	25 - 80		
LK-B	65	3.7 - 14.5	0.3	0.3	1 : 4	20 - 78	20 - 80	0.75kW Inverter motor (VF motor)	
		4.6 - 14.5	0.5	0.5	1 : 3.2	24 - 78	25 - 80		
	75	6.7 - 21.5	0.3	0.3	1 : 3.2	24 - 78	25 - 80		
LK-C	76	8 - 24	0.5	0.5	1 : 3	28 - 86	20 - 60	1.5kW Inverter motor (VF motor)	
	86	13 - 40	0.3	0.3	1 : 3	28 - 86	20 - 60		
	87	18 - 54	0.3	0.3	1 : 3	38 - 116	20 - 60		

Note 1: The capacity is the value when the maximum discharge pressure is applied in each type (with pure water at room temperature)
Note 2: With the LK-F type, a larger control range than 1 : 10 is available. In this case, however, the discharge accuracy and the linearity may be affected due to a stroke speed as low as 15 spm.
Note 3: The standard inverter is the Toshiba VF motor. In case of another motor used, most of the date in this list can still be used. To be sure, please contact your distributor in advance.
An inverter control with an ordinary general-purpose motor should not be employed, because it may result in trouble in trouble in the low speed range.
Note 4: This table is applied to 200V range invertor. Ask us for the invertor of other voltage.
: Two-value control by invertor and electric servo can not be done.

Optional accessories

Siphon preventing valve

Model		BVC-1P□L-□H	BVC-1P□-□H
Applicable capacity		Up to 1L/min	
Setting pressure		0.05 - 0.3MPa	0.3 - 0.8MPa
Material		PVC, FKM (EPDM)	
Connection mm (Applicable tube diameter)	Inlet	4 x 9, 12 x 18	
	Outlet	PT3/8 and PT1/2	

□: Symbol for material of O-ring ("V" for FKM, "E" for EPDM)

Air chamber

Body	Model	Applicable capacity L	Setting pressure MPa	Connection Nominal size JIS10K flange	Weight kg
PVC	A-1V□	1.0	0.5	Common for 15A - 25A	2
	A-2V□	2.0			2.5
	A-5V□	5.0			4.5
	N40A-10V(2)-F *	10		40A	16
	N50A-20V(2)-F *	20		50A	26
	N65A-30V(2)-F *	30		65A	49
SUS316	A-05S6-( )	0.5	0.9	10, 15, 20A	3
	A-1S6-( )	1.5		15, 20, 25A	5
	A-5S6-( )	5.0		25, 40A	12
	A-10S6-( )	10		40, 50A	15
	A-20S6-( )	20		50, 65A	29
	A-36S6-( )	36		65A	55

PVC, A type PVC, N type SUS, A type SUS, A type

* : Material for O-ring 10V / 20V for CR, 10V2 / 20V2 for FKM
□: Symbol for material of O-ring ("V" for FKM, "E" for EPDM)
( ) : Symbol for connection (10, 15, 20, 25, 40, 50 or 65)
Note1: The weight is the value of the product only. (The weight of liquid applied is not included.)
Note2: Rigid PVC chamber may deteriorate with ultraviolet ray or the applied chemical liquid over a long period of time.The chamber should be replaced every three years to guarantee safety.

Relief valve and back pressure valve

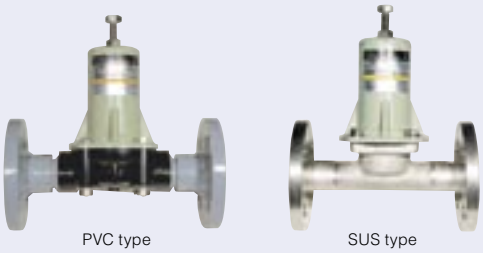

PVC type SUS type

List of relief valve

Body	Model	Max. capacity L/min	Setting pressure MPa	Connection Nominal size JIS10K flange	Weight kg
PVC	RV-1P□-4H	1.0	0.3 - 0.8	ø4 x ø9 PVC Hose	0.2
	RV-1P□-12H	1.0	0.3 - 0.8	ø12 x ø18 PVC Hose	0.2
	RV-1P□-15	1.0	0.3 - 0.8	15A	0.5
	RV-1P□-20	1.0	0.3 - 0.8	20A	0.5
	RV-1P□B-15	1.0	0.8 - 1.0	15A	0.5
	RV-3P-15	3.0	0.3 - 1.0	15A	0.6
	RV-3P-20	3.0	0.3 - 1.0	20A	0.6
	RV-3P-25	3.0	0.3 - 1.0	25A	0.9
	RV-3P□-12H	3.0	0.3 - 1.0	ø12 x ø18 PVC Hose	0.4
	RV-3P□-12P	3.0	0.3 - 1.0	ø12 x ø16 PE Hose	0.4
	RV-3P□-13E	3.0	0.3 - 1.0	ø13 x ø20 PE Hose	0.4
	RV-7V-20	7.5	0.3 - 0.8	20A	3
	RV-7V-25	7.5	0.3 - 0.8	25A	3.5
	RV-7VB-20	7.5	0.8 - 1.0	20A	3
	RV-7VB-25	7.5	0.8 - 1.0	25A	3.5
	RV-25V-25	25	0.3 - 0.8	25A	4
	RV-25V-40	25	0.3 - 0.8	40A	4
	RV-25V-50	25	0.3 - 0.8	50A	5
	N50RV-5V-F	50	0.15 - 0.5	50A	18
	N50RV-5V2-F	50	0.15 - 0.5	50A	18
	N65•50RV-5V-F	70	0.15 - 0.5	65A	18
	N65•50RV-5V2-F	70	0.15 - 0.5	65A	18
SUS	RV-2S6-15	2.0	0.3 - 0.8	15A	3.5
	RV-2S6B-15	2.0	0.8 - 1.5	15A	3.5
	RV-7S6-25	7.5	0.3 - 0.8	25A	6
	RV-7S6B-25	7.5	0.8 - 1.5	25A	6
	RV-25S6-25	25	0.3 - 0.8	25A	7.5
	RV-25S6B-25	25	0.8 - 1.0	25A	7.5
	RV-25S6-40	25	0.3 - 0.8	40A	7.5
	RV-25S6-50	25	0.3 - 0.8	50A	10
	RV-25S6B-40	25	0.8 - 1.0	40A	7.5
	N50RV-5S6-F	80	0.15 - 0.5	50A	29
	N65RV-5S6-F	120	0.15 - 0.5	65A	42

□: Symbol for material of O-ring ("V" for FKM, "E" for EPDM)
O-ring material of N type is "5V2" for FKM.
Note: Material for diaphragm is PTFE except RV-1P and N type.
Material of diaphragm is same as O-ring material at RV-1P and N type

List of back pressure valve

Body	Model	Max. capacity L/min	Setting pressure MPa	Connection Noeminal size JIS10K flange	Weight kg
PVC	BV-1P□-4H	0.005 - 1.0	0.3 - 0.8	ø4 x ø9 PVC Hose	0.2
	BV-1P□-12H	0.005 - 1.0	0.3 - 0.8	ø12 x ø18 PVC Hose	0.2
	BV-1P□-15	0.005 - 1.0	0.3 - 0.8	15A	0.5
	BV-1P□-20	0.005 - 1.0	0.3 - 0.8	20A	0.5
	BV-1P□L-4H	0.005 - 1.0	0.05 - 0.3	ø4 x ø9 PVC Hose	0.2
	BV-1P□L-12H	0.005 - 1.0	0.05 - 0.3	ø12 x ø18 PVC Hose	0.2
	BV-1P□L-15	0.005 - 1.0	0.05 - 0.3	15A	0.5
	BV-1P□L-20	0.005 - 1.0	0.05 - 0.3	20A	0.5
	BV-3P□-12H	0.03 - 1.0	0.1 - 0.8	ø12 x ø18 PVC Hose	0.4
	BV-3P□-12P	0.03 - 1.0	0.1 - 0.8	ø12 x ø16 PE Hose	0.4
	BV-3P□-13E	0.03 - 1.0	0.1 - 0.8	ø13 x ø20 PE Hose	0.4
	BV-3N□-12H	0.03 - 3.0	0.1 - 0.3	ø12 x ø18 PVC Hose	0.4
	BV-3N□-15	0.03 - 3.0	0.1 - 0.3	15A	0.6
	BV-3N□-20	0.03 - 3.0	0.1 - 0.3	20A	0.6
	BV-3N□-25	0.03 - 3.0	0.1 - 0.3	25A	0.9
	BV-7V-20	0.2 - 7.5	0.05 - 0.8	20A	3
	BV-7V-25	0.2 - 7.5	0.05 - 0.8	25A	3.5
	BV-25V-25	2 - 25	0.1 - 0.8	25A	4
	BV-25V-40	2 - 25	0.1 - 0.8	40A	4
	BV-25V-50	2 - 25	0.1 - 0.8	50A	5
	N50BV-5V-F	2.5 - 50	0.15 - 0.5	50A	18
	N50BV-5V2-F	2.5 - 50	0.15 - 0.5	50A	18
	N65•50BV-5V-F	5 - 70	0.15 - 0.5	65A	18
	N65•50BV-5V2-F	5 - 70	0.15 - 0.5	65A	18
SUS	BV-2S6-15	0.02 - 2.0	0.05 - 0.8	15A	3.5
	BV-7S6-25	0.2 - 7.5	0.15 - 0.5	25A	6
	BV-25S6-25	2 - 25	0.1 - 0.8	25A	7.5
	BV-25S6-40	2 - 25	0.1 - 0.8	40A	7.5
	BV-25S6-50	2 - 25	0.1 - 0.8	50A	10
	N50BV-5S6-F	2.5 - 80	0.15 - 0.5	50A	29
	N65BV-5S6-F	5 - 120	0.15 - 0.5	65A	42

□: Symbol for material of O-ring ("V" for FKM, "E" for EPDM)
O-ring material or N type is "5V" for CR, or "5V2" for FKM.
Note1: Material for diaphragm is PTFE except BV-1P and N type.
Material of diaphragm is same as O-ring material at BV-1P and N type.
Note2: The back pressure valve can not curb the residual flow completely when the pump stops. Use the solenoid valve in order to shut out the residual flow.

Dimensions (in mm)

Dimensions may be changed without prior notice for the purpose of product improvement.
Be sure to carry out installation work with the most recent and detailed drawings. which are available upon request

LK-11 to LK-57 (Original motor type)

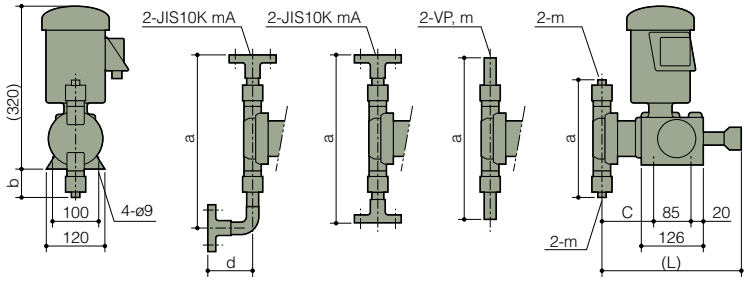

Flange type PVC | Flange type SUS | Union type PVC | Hose type PVC

Model	Hose type PVC					Union type PVC					Flange type PVC						Flange type SUS				
	L	a	b	c	m	L	a	b	c	m	L	a	b	c	d	m	L	a	b	c	m
LK-1	274	146	23	95	Note 1	274	240	70	95	16	274	264	86	95	89	15	272	141	20	92	15
2	274	164	32	95		274	258	79	95	16	274	282	95	95	89	15	272	151	25	92	15
3	277	224	62	97		277	318	109	97	16	277	342	117	97	89	15	277	184	42	97	15
4	281	244	62	99		281	338	119	99	16	281	362	135	99	89	15	283	261	80	101	15
5	–	–	–	–		298	314	107	114	25	298	338	125	114	97	25	295	320	109	111	25
47VS	–	–	–	–		291	272	86	99	25	281	308	104	99	97	25	–	–	–	–	–

Note 1: Connection size LK-1 and LK-2 ø4mm x ø9mm, LK-3, LK-4 and LK-1 to LK-4 VS type ø12mm x ø18mm.
For information of TC type, please contact IWAKI or nearest distributor.

LK-A55 to LK-C87 (General purpose motor type)

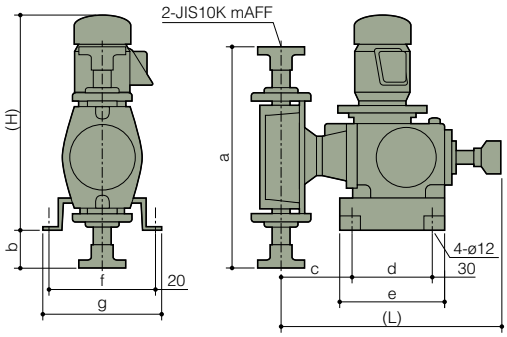

Model	PVC				SUS				Note 2					
	L	a	b	c	L	a	b	c	H	d	e	f	g	m
LK-A5	476	325	-29	119	473	320	-32	108	547	180	240	260	300	25
A6	532	599	108	154	533	431	24	164	547	180	240	260	300	40
B6	595	599	90	164	605	431	6	174	594	240	300	310	350	40
B7	599	600	90	167	610	465	23	178	594	240	300	310	350	50
C7	599	600	90	167	610	465	23	178	601	240	300	310	350	50
C8	605	647	114	173	609	633	107	177	601	240	300	310	350	65

Note 2: These dimensions are common between PVC pump head and SUS pump head.

LK-F1 to F5 (General purpose motor type)

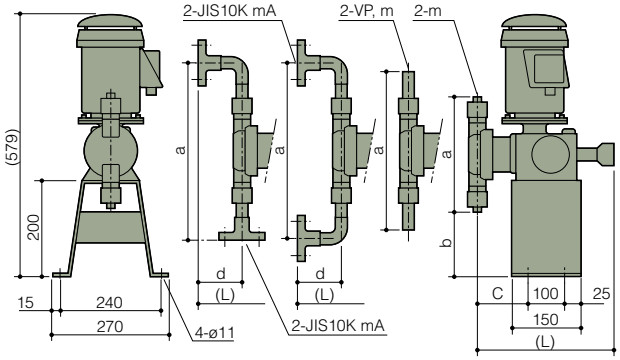

Flange type SUS | Flange type PVC | Union type PVC | Hose type PVC

Model	Hose type PVC					Union type PVC					Flange type PVC						Flange type SUS					
	L	a	b	c	m	L	a	b	c	m	L	a	b	c	d	m	L	a	b	c	d	m
LK-F1	274	146	177	87	Note 1	274	240	130	87	16	363	272	114	87	89	15	332	156	180	85	60	15
2	274	164	168	87		274	258	121	87	16	363	290	105	87	89	15	332	166	175	85	60	15
3	277	224	138	89		277	318	91	89	16	366	350	75	89	89	15	337	201	158	90	60	15
4	281	243	128	92		281	337	81	92	16	370	369	65	92	89	15	343	270	120	94	60	15
5	–	–	–	–	–	298	314	93	107	25	395	350	75	107	97	25	399	368	90	104	104	25
47VS	–	–	–	–	–	281	272	114	92	25	378	308	96	92	97	25	–	–	–	–	–	–

Note 1: Connection size LK-1 and LK-2 ø4mm x ø9mm, LK-3, LK-4 and LK-1 to LK-4 VS type ø12mm x ø18mm.
For information of TC type, please contact IWAKI or nearest distributor.

Pump controller

MFC

Multifunction pump controller for LK-F series metering pumps

- Capable of analogue input (4~20mA) and pulse input (Dividing/Multiply) operation
- Operating functions of the pump can be monitored via external output signal.
- Easy key touch operation and a large LCD display give good control legibility.
- Display preference of flow rate (L/min) or stroke rate (SPM) is user-selectable.
- Combination of stroke length adjustment with stroke rate enables flow volume control over a wide range of 1:480.

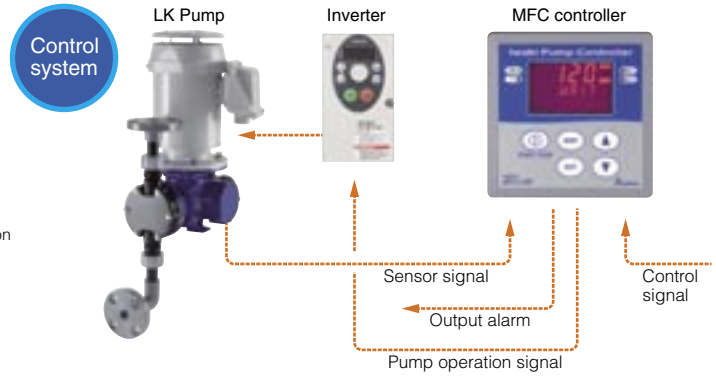

www.iwakipumps.jp

IWAKI CO.,LTD. 6-6 Kanda-Sudacho 2-chome Chiyoda-ku Tokyo 101-8558 Japan TEL : (81)3 3254 2935 FAX : 3 3252 8892

EUROPE / U.S.A.

European office	: IWAKI Europe GmbH	TEL: (49)2154 9254 0	FAX: 2154 9254 48
Austria	: IWAKI (Austria) GmbH	TEL: (41)26 674 93 00	FAX: 26 674 93 02
Belgium	: IWAKI Belgium N.V.	TEL: (32)13 67 02 00	FAX: 13 67 20 30
Denmark	: IWAKI Nordic A/S	TEL: (45)48 24 2345	FAX: 48 24 2346
Finland	: IWAKI Suomi Oy	TEL: (358)9 2745810	FAX: 9 2742715
France	: IWAKI France S.A.	TEL: (33)1 69 63 33 70	FAX: 1 64 49 92 73
Germany	: IWAKI Europe GmbH	TEL: (49)2154 9254 50	FAX: 2154 9254 55
Holland	: IWAKI Holland B.V.	TEL: (31)297 241121	FAX: 297 273902
Italy	: IWAKI Italia S.R.L.	TEL: (39)02 990 3931	FAX: 02 990 42888
Norway	: IWAKI Norge AS	TEL: (47)66 81 16 60	FAX: 66 81 16 61
Spain	: IWAKI Iberica Pumps, S.A.	TEL: (34)943 630030	FAX: 943 628799
Sweden	: IWAKI Sverige AB	TEL: (46)8 511 72900	FAX: 8 511 72922
Switzerland	: IWAKI (Schweiz) AG	TEL: (41)26 674 93 00	FAX: 26 674 93 02
U.K.	: IWAKI Pumps (UK) Ltd.	TEL: (44)1743 231363	FAX: 1743 366507
U.S.A.	: IWAKI America Inc.	TEL: (1)508 429 1440	FAX: 508 429 1386

ASIA / OCEANIA

( )Country codes

Australia	: IWAKI Pumps Australia Pty Ltd.	TEL: (61)2 9899 2411	FAX : 2 9899 2421
China			
Hong Kong	: IWAKI Pumps Co., Ltd.	TEL: (852)2607 1168	FAX: 2607 1000
Shanghai	: IWAKI Pumps (Shanghai) Co., Ltd.	TEL: (86)21 6272 7502	FAX: 21 6272 6929
Guangzhou	: GFTZ IWAKI Engineering & Trading Co., Ltd.	TEL: (86)20 8435 0603	FAX: 20 8435 9181
Beijing	: GFTZ Iwaki Engineering & Trading Co., Ltd. (Beijing office)	TEL: (86)10 6442 7713	FAX: 10 6442 7712
Korea	: IWAKI Korea Co.,Ltd.	TEL: (82)2 2630 4800	FAX: 2 2630 4801
Malaysia	: IWAKIm Sdn. Bhd.	TEL: (60)3 7803 8807	FAX: 3 7803 4800
Singapore	: IWAKI Singapore Pte Ltd.	TEL: (65)6316 2028	FAX: 6316 3221
Indonesia	: IWAKI Singapore (Indonesia Branch)	TEL: (62)21 6906606	FAX: 21 6906612
Taiwan	: IWAKI Pumps Taiwan Co., Ltd.	TEL: (886)2 8227 6900	FAX: 2 8227 6818
Thailand	: IWAKI (Thailand) Co.,Ltd.	TEL: (66)2 322 2471	FAX: 2 322 2477
Vietnam	: IWAKI Pumps Vietnam Co., Ltd.	TEL: (84)613 933456	FAX: 613 933399

Caution for safety use: Before use of pump, read instruction manual carefully to use the product correctly.
Actual pumps may differ from the photos. Specifications and dimensions are subject to change without prior notice. For further details please contact us.