IRV-A604-40

2MP AHD Vari-Focal Lens IR Bullet Camera

AHD 2.0 **CVBS**

Features

- 1/3" Panasonic CMOS Sensor
- 1080p 30fps
- D-WDR (Digital WDR)
- DNR (2D+3D)
- Privacy Mask Function
- Motion Detection
- Defog Function
- 2.8~12mm Vari-focal Lens
- 40pcs IR LED(IR Distance 20~30m)
- External Control : Focus/Zoom(Gear type), OSD Control(Joystick)
- Cable managed bracket
- IP67 Waterproof
- utc

Dimensions

Unit : mm

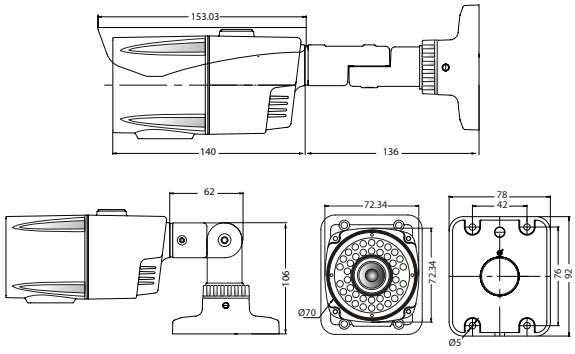

CAMERA	
Image Sensor	1/3" Panasonic CMOS Sensor
Total Pixels	1956 (H) x 1266 (V) = 2.48M Pixels
Active Pixels	1944 (H) x 1092 (V) = 2.12M Pixels
Scanning System	Progressive Scan
Resolution	Analog HD : 1080p 30fps
	Analog CVBS : 1280H NTSC/PAL
Min. Illumination	Color : 1.0Lux, Color DSS: 0.002Lux, BW: 0Lux IR ON
S/N Ratio	more than 50dB (AGC off)
Video Output	AHD, CVBS

LENS	
Lens Type	2.8~12mm Vari-focal Lens

CAMERA FUNCTIONS	
AGC	Off / 0 ~ 15
DSS	Off / x2 ~ x30
Day & Night	Auto / Color / BW / EXT
White Balance	ATW / AWC / INDOOR / OUTDOOR / Manual / AWB
BLC	Off / BLC / HSBLC
Mirror	Off / H / V / H&V / ROTATE
D-WDR	Off / 0 ~ 8
DNR	Off / Low / Middle / High
Privacy	4 Masks
Motion	Off / On
Defog	Off / Auto
Language	English / Chinese / German / French / Italian / Spanish / Polish / Russian /
	Portuguese / Dutch / Turkish / Japan

GENERAL	
Power Source	DC12V±10%
Operating Temperature	-10°C ~ +50°C / 0% ~ 90% RH
Dimensions	78(W) x 106(H) x 289.3(D) mm
Weight	1.14Kg