Global network

www.yudo.com

Any question? Access to http://qna.yudo.com

▶ We reserve the right to change specifications without notice.

Ver. 1.5 WINA TIMO TD (2014. Mar)

Premium nozzle series

WINA TIMO

TIMO

TECHNICAL DATA

YUDO

WINA concept

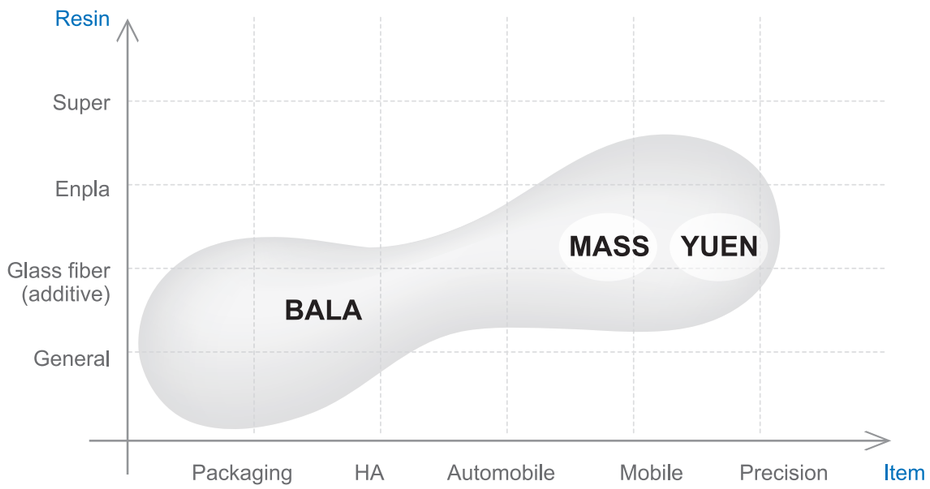

· Existing YUDO product focused on commodity resin application.
· With increase in types of resin, requirement for special and optimizes hot runner system is necessary.

· With WINA series, YUDO incorporated the best-in-class nozzle series to cater for specific resin application.
· There are seven series of nozzle ranging from general purpose to highly specialized super engineering plastic application.

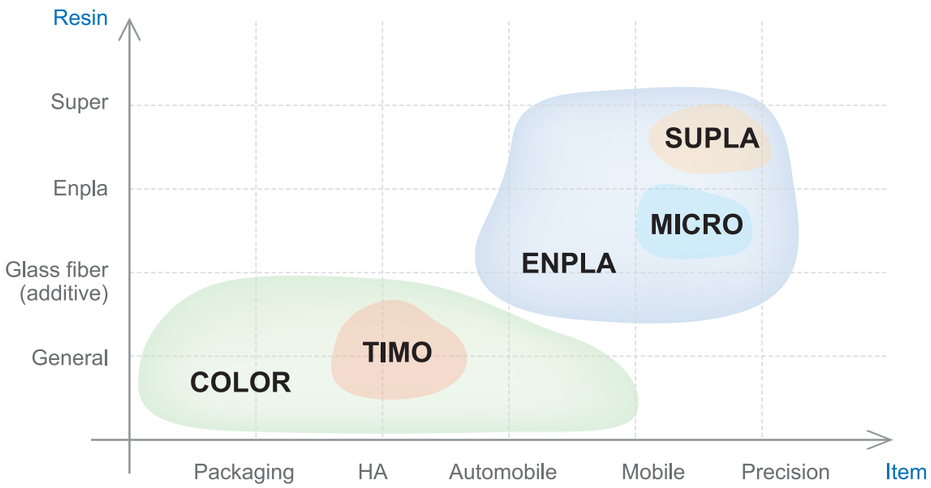

Premium hot runner solution - WINA series

COLOR

The best solution for color changing mold

ENPLA

Hot runner for engineering plastic

SUPLA

Ultimate solution for super engineering plastic

TIMO

Precise & long nozzle for reverse mold

CLEAR

Transparent application

MICRO

Micro pitch valve gate for multi cavity mold

BIGMO

Multi-purpose system for medium & large mold

What is WINA TIMO?

WINA TIMO system is optimum long nozzle type of hot runner system designed for core injection and direct gate.

Features of WINA TIMO

WINA TIMO system has various standard nozzles from 215 to 500 mm, thus covering nearly every core injection mold.

Customers can apply the limitless core cooling structure to the direct gating thanks to the step-down shape and ultra slim fore-end of nozzle. Telescopic shape of WINA TIMO is applicable from small to large molds.

Standard nozzle heaters consist of 2 or 3 different sizes so as to keep stable temperature all over the hot runner system. Stable temperature control of hot runner system minimizes the transmutation of material. This is suitable for exterior quality product.

WINA TIMO is the best solution for the high glossy products and transparent materials such as PC, PMMA, etc. TIMO stably performs well at steam mold which has big temperature variation.

WINA TIMO system consists of standard length of nozzles which are manufactured by considering thermal expansion. Strict quality control is conducted.

Application

Application : Core injection molding, TV front cover, Home appliance etc.
Resin : PC, HIPS, ABS, PMMA, PC+ABS etc.

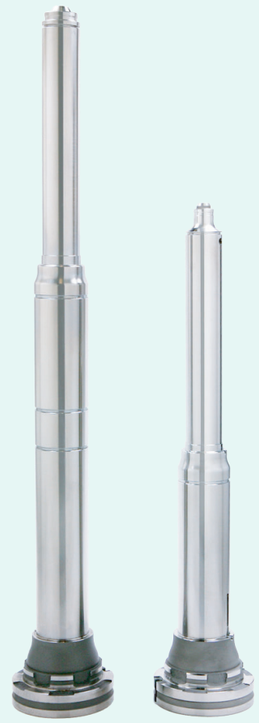

WINA TIMO nozzle

INDEX

Nozzle data

TIMO application note / 01 / Terminology of TIMO system / 02 / Specification of TIMO system / 03 /
Model number of TIMO nozzle / 04 /

Cylinder data

Pneumatic cylinder specification of TIMO / 05 / Pin specification of TIMO / 06 /
Section of mold machining in TIMO / 07 / Gate area machining of TIMO / 08 /
Cylinder area machining of TIMO / 09 / Flange area machining of TIMO / 10 /

● TIMO application note

Size of nozzles

Unit : mm

Size	Manifold			Nozzle			
	Step	Channel dia. (mm)	Area (mm^2)	Step	Channel dia. (mm)	Valve pin dia. (mm)	Area (mm^2)
Ø19 Union	Bridge Manifold	16	200	1 step Nozzle	12	6	80
Ø12 Union	Manifold	11	100	2 step Nozzle	9	4	50

Injection volume by nozzle size

- Injection volume varies to the resin used, thickness of the product, injection speed and gate diameter.
- The following figures are the reference for helping to understand the various type of gate system.
- Please contact YUDO representative or agency for an actual application.

Unit : gram

Size	Viscosity			Product thickness		Materials	
	High (Low ml)	Medium	Low (High ml)	Thin (2mm ↓)	Thick (2mm ↑)	Engineering	General
32	~70	~120	~240	~120	~240	~70	~120

Minimum gate type by nozzle pitch

Unit : mm

Nozzle size	Flange bush size(ØF)	Nozzle type	Minimum cylinder pitch		Minimum nozzle pitch	
			Type	Square(A/B)	Center to gate(a)	Gate to gate(b)
TIMO 32	66	Valve	CPS 70	100 / 79	65	79

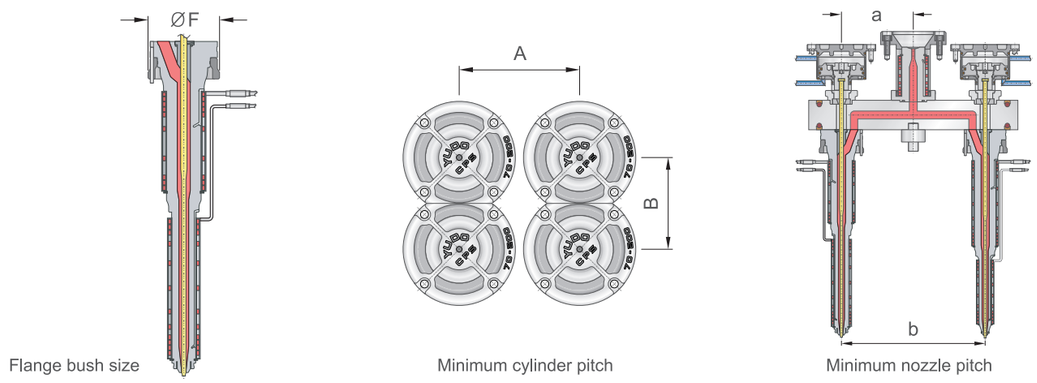

Flange bush size　　Minimum cylinder pitch　　Minimum nozzle pitch

Material compatibility

☆ : Good ○ : Possible △ : Contact YUDO × : Not recommended

Gating method / Gate type	Amorphous materials							Crystalline materials									Additives			
	ABS	PC	PMMA (Acryl)	PPO	PS	PUR	SAN	PA	PBT	PE	PET	POM (Acetal)	PP	PPS	LCP	PEEK	Flame retardants	Glass fiber filled	Stabilizer filled	Color change
Ø19 Union	☆	☆	☆	○	☆	△	○	○	○	☆	○	○	☆	○	×	×	○	○	○	☆
Ø12 Union	☆	☆	☆	○	☆	△	○	△	△	☆	△	○	☆	△	×	×	○	○	○	☆

● Terminology of TIMO system

Part by name

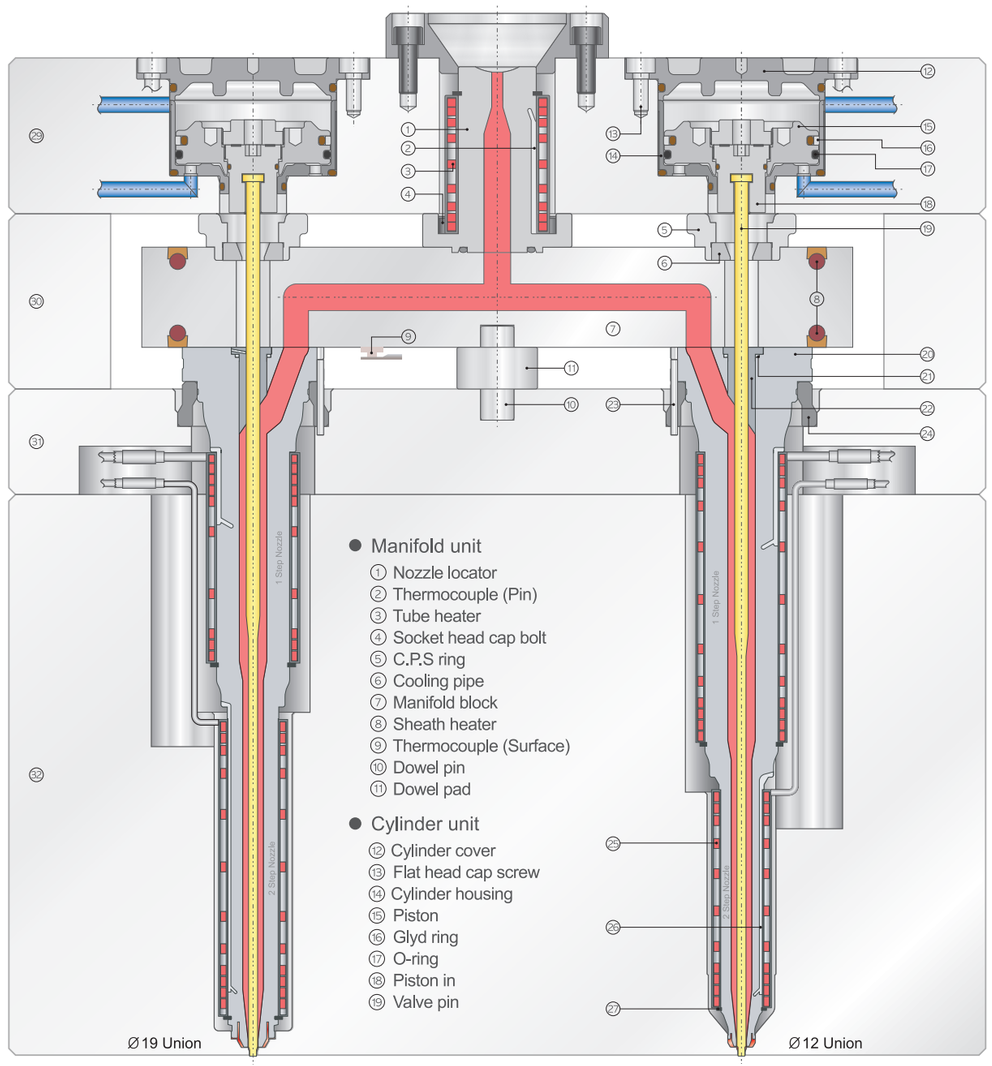

● Manifold unit
① Nozzle locator
② Thermocouple (Pin)
③ Tube heater
④ Socket head cap bolt
⑤ C.P.S ring
⑥ Cooling pipe
⑦ Manifold block
⑧ Sheath heater
⑨ Thermocouple (Surface)
⑩ Dowel pin
⑪ Dowel pad

● Cylinder unit
⑫ Cylinder cover
⑬ Flat head cap screw
⑭ Cylinder housing
⑮ Piston
⑯ Glyd ring
⑰ O-ring
⑱ Piston in
⑲ Valve pin

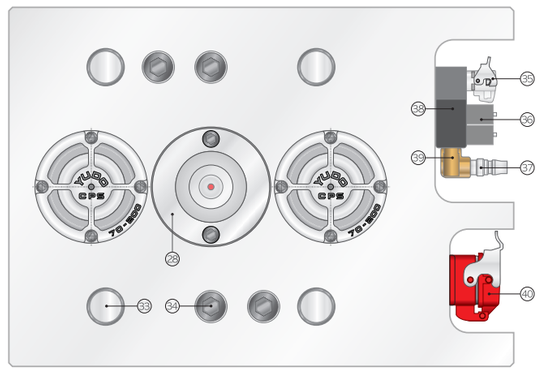

● Nozzle unit
⑳ Nozzle body
㉑ Seal ring
㉒ Pin guide bush
㉓ Nozzle lock pin
㉔ Insulation flange
㉕ Tube heater
㉖ Thermocouple
㉗ Snap ring

● MODU system unit
㉘ Locating ring
㉙ Clamping plate
㉚ Spacer plate
㉛ Holding plate
㉜ Cavity plate
㉝ Center pin
㉞ Socket head cap bolt

● Connecting unit
㉟ Connector (Signal)
㊱ Solenoid valve
㊲ Air nipple
㊳ Sol manifold
㊴ Silencer
㊵ Connector (Power + T/C)

● Specification of TIMO system

Structure and specification

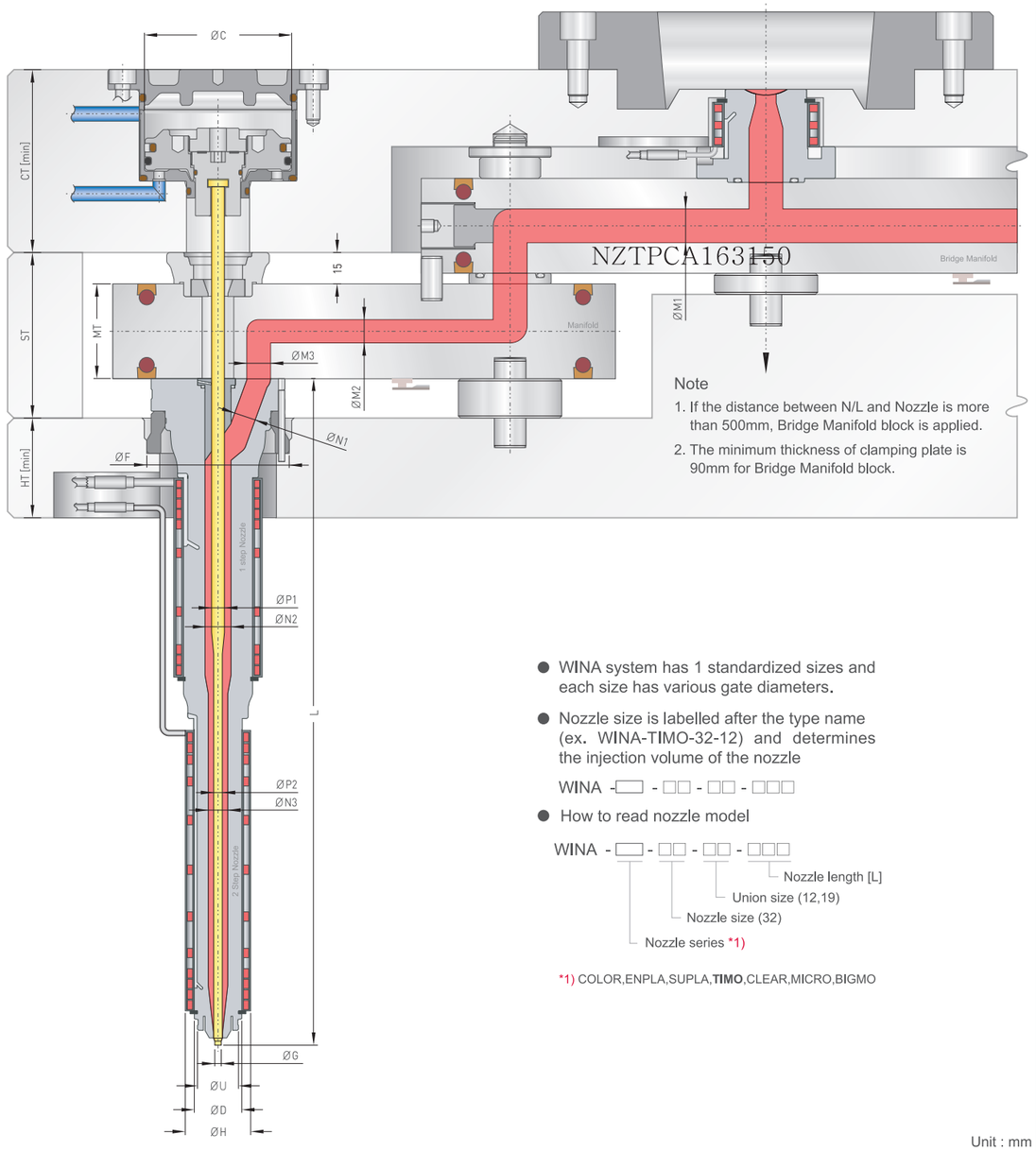

Note

1. If the distance between N/L and Nozzle is more than 500mm, Bridge Manifold block is applied.
2. The minimum thickness of clamping plate is 90mm for Bridge Manifold block.

- WINA system has 1 standardized sizes and each size has various gate diameters.
- Nozzle size is labelled after the type name (ex. WINA-TIMO-32-12) and determines the injection volume of the nozzle

  WINA -□ - □□ - □□ - □□□

- How to read nozzle model

  WINA - □ - □□ - □□ - □□□
  - Nozzle length [L]
  - Union size (12,19)
  - Nozzle size (32)
  - Nozzle series *1)

  *1) COLOR,ENPLA,SUPLA,**TIMO**,CLEAR,MICRO,BIGMO

Unit : mm

Division	Union ØU	Model number	Injection volume	ØC	CT [min]	ST [min]	HT [min]	MT [min]	L	ØD	ØH	ØF	ØM1	ØM2	ØM3	ØN1	ØN2	ØN3	ØP1	ØP2	ØG
TIMO 32	19	WINA TIMO 32-19-□□□	up to 240 gram	80	80	80	40	45	215~	18	25	66	16	11	11	10	12	9	6	4	2
	12	WINA TIMO 32-12-□□□								22	30										2.5 / 3

● Model number of TIMO nozzle

Nozzle length by heater, T/C code, Step heater application

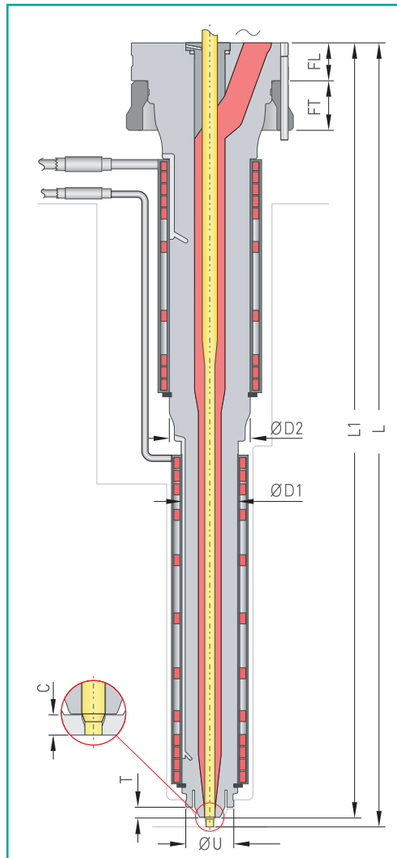

Unit : mm

	TIMO 32	
	Union19	Union 12
Ø U	19	12
Ø D1	22	18
Ø D2	32	
L	215 ~ 500	
C	3.5	
T	3.55	2.55
FL	15	
FT	20	

Unit : mm

	TIMO 32
Heater 1	32
Heater 2	18 22
Heater 3	32

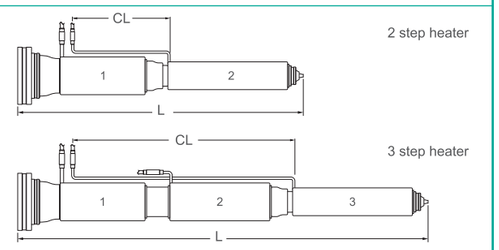

CL = Lead line (pipe) length

- How to read heater code

  HT - T - E - 22 - 3 - 20 - 430
  - Heater length (HL)
  - Lead line (pipe) length
  - Heater inside diameter
  - Heater size
  - Lead wire type (E - End, M - Middle, F - First)
  - Nozzle series (COLOR,ENPLA,SUPLA,TIMO,CLEAR,MICRO,BIGMO)
  - Heater

- How to read T/C code

  NZ - TP - CA - 16 - 145 - 0
  - Lead wire length (0:1.5m / 3:3m)
  - Thermocouple length
  - Thermocouple wire dia (10:Ø1.0, 16:Ø1.6)
  - Thermocouple type (IC or CA)
  - Pin type thermocouple
  - Sensing position (nozzle)

- Dimension "L" is the nominal dimension of the length of nozzle, and dimension "L1" is the cold dimension of the length of nozzle.

Union	Model	L	L1	Heater 1	T / C 1	Heater 2	T / C 2	Heater 3	T / C 3
Ø19	WINA TIMO 32 - Ø19 - 215	215	210.82	HTTE22320430	NZTPIC[CA]161150	HTTF22210095	NZTPIC[CA]101950	-	-
	WINA TIMO 32 - Ø19 - 310	310	305.54	HTTE22320950	NZTPIC[CA]161150	HTTF22216130	NZTPIC[CA]102850	-	-
	WINA TIMO 32 - Ø19 - 330	330	325.48	HTTE22321150	NZTPIC[CA]161150	HTTF22216130	NZTPIC[CA]103050	-	-
	WINA TIMO 32 - Ø19 - 370	370	365.36	HTTE22321550	NZTPIC[CA]161150	HTTF22221130	NZTPIC[CA]103550	-	-
	WINA TIMO 32 - Ø19 - 380	380	375.78	HTTE22321650	NZTPIC[CA]161350	HTTF22221130	NZTPIC[CA]103550	-	-
	WINA TIMO 32 - Ø19 - 420	420	415.21	HTTE22321150	NZTPIC[CA]161150	HTTM22318065	NZTPIC[CA]162950	HTTF22225130	NZTPIC[CA]104150
	WINA TIMO 32 - Ø19 - 440	440	435.15	HTTE22321150	NZTPIC[CA]161150	HTTM22318085	NZTPIC[CA]163150	HTTF22229130	NZTPIC[CA]104350
	WINA TIMO 32 - Ø19 - 460	460	455.09	HTTE22321150	NZTPIC[CA]161150	HTTM22318105	NZTPIC[CA]163350	HTTF22229130	NZTPIC[CA]104550
	WINA TIMO 32 - Ø19 - 480	480	475.03	HTTE22321150	NZTPIC[CA]161150	HTTM22318125	NZTPIC[CA]163550	HTTF22233130	NZTPIC[CA]104750
	WINA TIMO 32 - Ø19 - 490	490	485.00	HTTE22321150	NZTPIC[CA]161150	HTTM22318135	NZTPIC[CA]163750	HTTF22233130	NZTPIC[CA]104950
	WINA TIMO 32 - Ø19 - 500	500	494.97	HTTE22321150	NZTPIC[CA]161150	HTTM22318145	NZTPIC[CA]163750	HTTF22233130	NZTPIC[CA]104950
	WINA TIMO 32 - Ø19 - 510	510	504.94	HTTE22321150	NZTPIC[CA]161150	HTTM22318155	NZTPIC[CA]163950	HTTF22235130	NZTPIC[CA]105150
	WINA TIMO 32 - Ø19 - 520	520	514.91	HTTE22321150	NZTPIC[CA]161150	HTTM22318165	NZTPIC[CA]163950	HTTF22235130	NZTPIC[CA]105150
Ø12	WINA TIMO 32 - Ø12 - 215	215	210.82	HTTE22320430	NZTPIC[CA]161350	HTTF22181095	NZTPIC[CA]102050	-	-
	WINA TIMO 32 - Ø12 - 290	290	285.60	HTTE22321100	NZTPIC[CA]161350	HTTF22181695	NZTPIC[CA]102850	-	-
	WINA TIMO 32 - Ø12 - 310	310	305.54	HTTE22321300	NZTPIC[CA]161350	HTTF22182095	NZTPIC[CA]102850	-	-
	WINA TIMO 32 - Ø12 - 320	320	315.51	HTTE22321400	NZTPIC[CA]161350	HTTF22182095	NZTPIC[CA]103050	-	-
	WINA TIMO 32 - Ø12 - 330	330	325.48	HTTE22321500	NZTPIC[CA]161350	HTTF22182095	NZTPIC[CA]103050	-	-
	WINA TIMO 32 - Ø12 - 340	340	355.45	HTTE22321600	NZTPIC[CA]161350	HTTF22182295	NZTPIC[CA]103050	-	-
	WINA TIMO 32 - Ø12 - 370	370	365.36	HTTE22321900	NZTPIC[CA]161350	HTTF22182595	NZTPIC[CA]103550	-	-
	WINA TIMO 32 - Ø12 - 380	380	375.33	HTTE22322000	NZTPIC[CA]161350	HTTF22182595	NZTPIC[CA]103550	-	-
	WINA TIMO 32 - Ø12 - 420	420	415.21	HTTE22321500	NZTPIC[CA]161350	HTTM22322065	NZTPIC[CA]163350	HTTF22182995	NZTPIC[CA]104150
	WINA TIMO 32 - Ø12 - 440	440	435.15	HTTE22321500	NZTPIC[CA]161350	HTTM22322085	NZTPIC[CA]163550	HTTF22183295	NZTPIC[CA]104550
	WINA TIMO 32 - Ø12 - 450	450	445.11	HTTE22321500	NZTPIC[CA]161350	HTTM22322095	NZTPIC[CA]163650	HTTF22183295	NZTPIC[CA]104550
	WINA TIMO 32 - Ø12 - 460	460	455.09	HTTE22321500	NZTPIC[CA]161350	HTTM22322105	NZTPIC[CA]163750	HTTF22183295	NZTPIC[CA]104550
	WINA TIMO 32 - Ø12 - 470	470	465.06	HTTE22321500	NZTPIC[CA]161350	HTTM22322115	NZTPIC[CA]163390	HTTF22183695	NZTPIC[CA]104750
	WINA TIMO 32 - Ø12 - 480	480	475.03	HTTE22321500	NZTPIC[CA]161350	HTTM22322125	NZTPIC[CA]163390	HTTF22183695	NZTPIC[CA]104750
	WINA TIMO 32 - Ø12 - 490	490	482.45	HTTE22321500	NZTPIC[CA]161350	HTTM22322135	NZTPIC[CA]164150	HTTF22183695	NZTPIC[CA]104950
	WINA TIMO 32 - Ø12 - 500	500	494.97	HTTE22321500	NZTPIC[CA]161350	HTTM22322145	NZTPIC[CA]164150	HTTF22183695	NZTPIC[CA]104950

● Pneumatic cylinder specification of TIMO

Pneumatic cylinder O-ring code name

● CPS

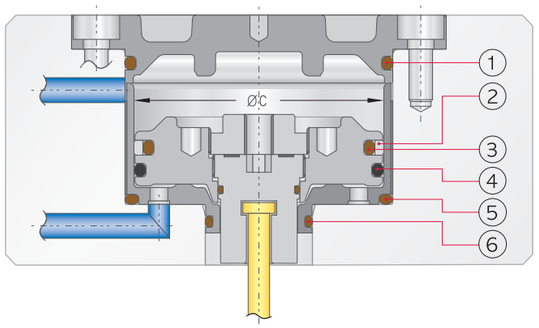

NO.	Position		CPS70□□GP code
1	Cover		ACRRAV352310
2	Piston	Upper Side	ACRGSO440700
3			ACRRAV352280
4		Lower Side	ACRRAV352301
5	Bottom		ACRRAV352320
6	Housing		ACRRAV261200

Pneumatic cylinder by valve pin size

Unit : mm

● How to read pneumatic cylinder model

CPS - 70 - 06

Valve cylinder type (CPS) | Cylinder size (ØC : 70) | Valve pin diameter (06)

Cylinder model	Valve pin	Nozzle model
TIMO 32	Ø 6	CPS7006

Pneumatic circuit

Pneumatic solenoid valve input voltage
: DC 24V or AC220(YUDO STD)

- Output power must be the same as the voltage for solenoid valve.
- Relay must be installed between injection machine and solenoid valve for valve gate hot runner system in case of using AC 220V.

- Solenoid valve for valve gate hot runner system (2-Position single)

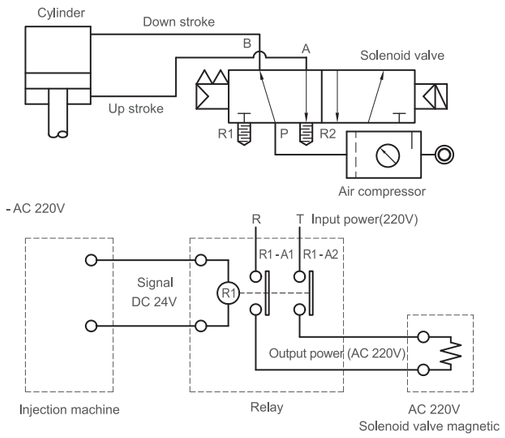

● Pin specification of TIMO

Straight type valve pin(VPS type)

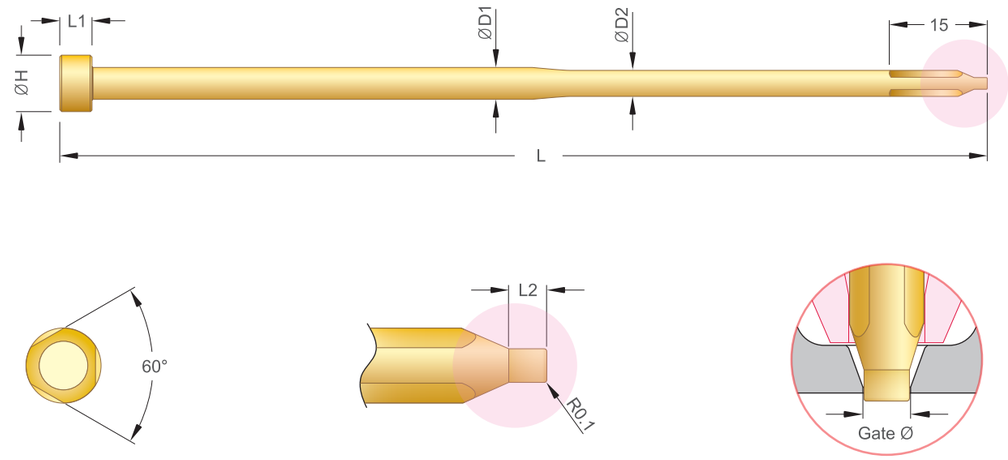

Unit : mm

Nozzle Model	Gate Ø	ØD1	ØD2	ØH	L1	L2
WINA TIMO 32 19	2 / 2.5 / 3	6	4	9	4	3.85
WINA TIMO 32 12						

How to calculate the length of valve pin

AD cylinder

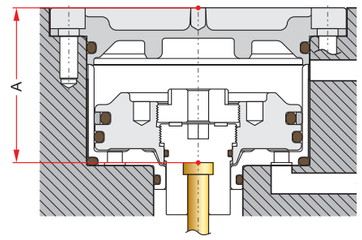

Cylinder standard	A
CPS 70	52

● How to calculate the length of valve pin

- Cavity plate thickness + Holding plate thickness + Spacer plate thickness + Clamping plate thickness + Allowance in valve pin length 0.5mm + Pin protrusion 0.5mm - A - Heat expansion
- In case of hydraulic cylinder, no allowance in valve pin length will be added.

● Section of mold machining in TIMO

Section area

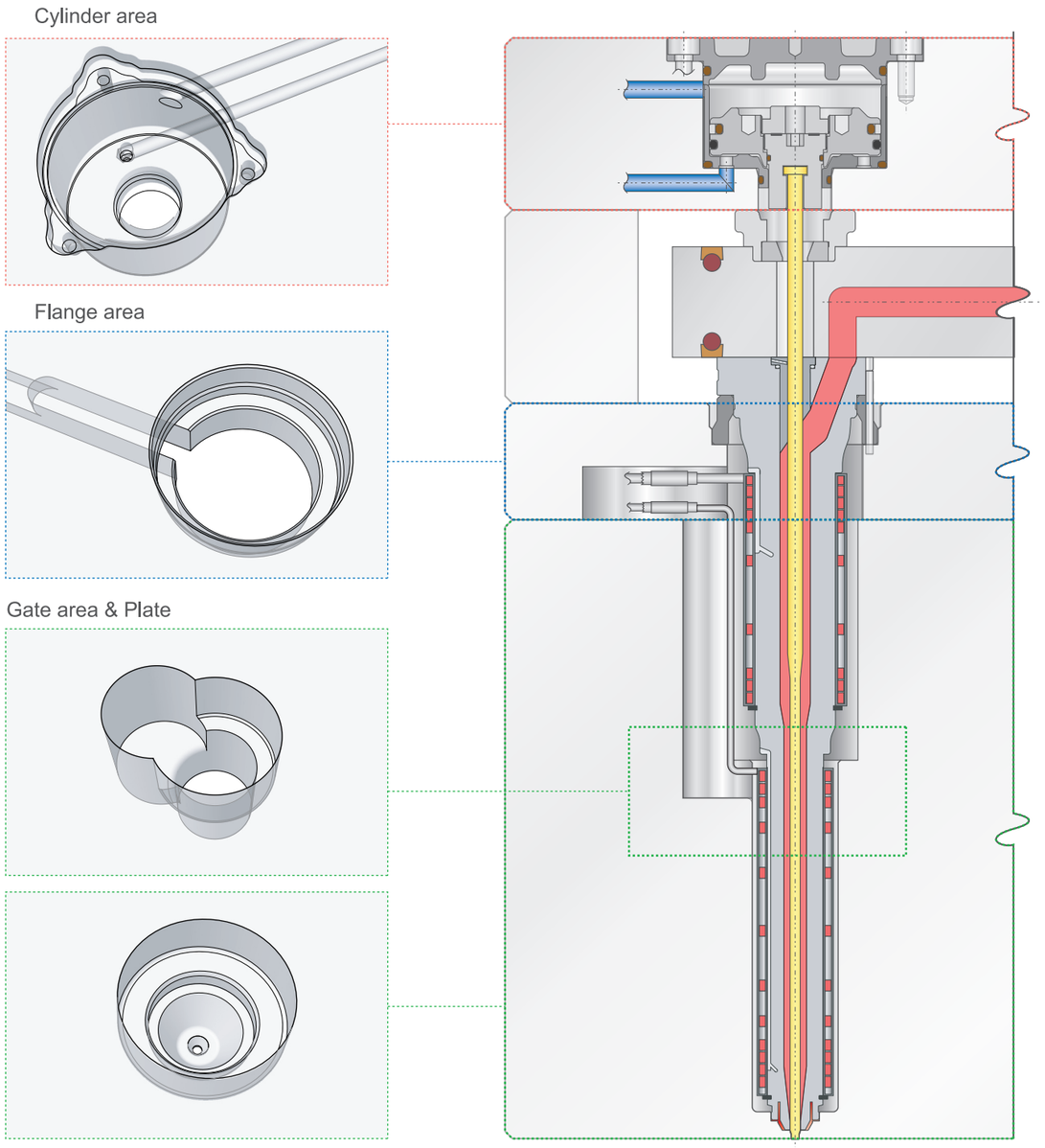

● The core plate needs to be partially heat treated (HrC 50~52) to prevent from abrasion.

Type \ Mold area	Cylinder	Flange	Gate
MODU (Hot half)	YUDO	YUDO	Customer
HRS (M/F + Nozzle)	Customer	Customer	Customer

● Gate area machining of TIMO

Gate area machining

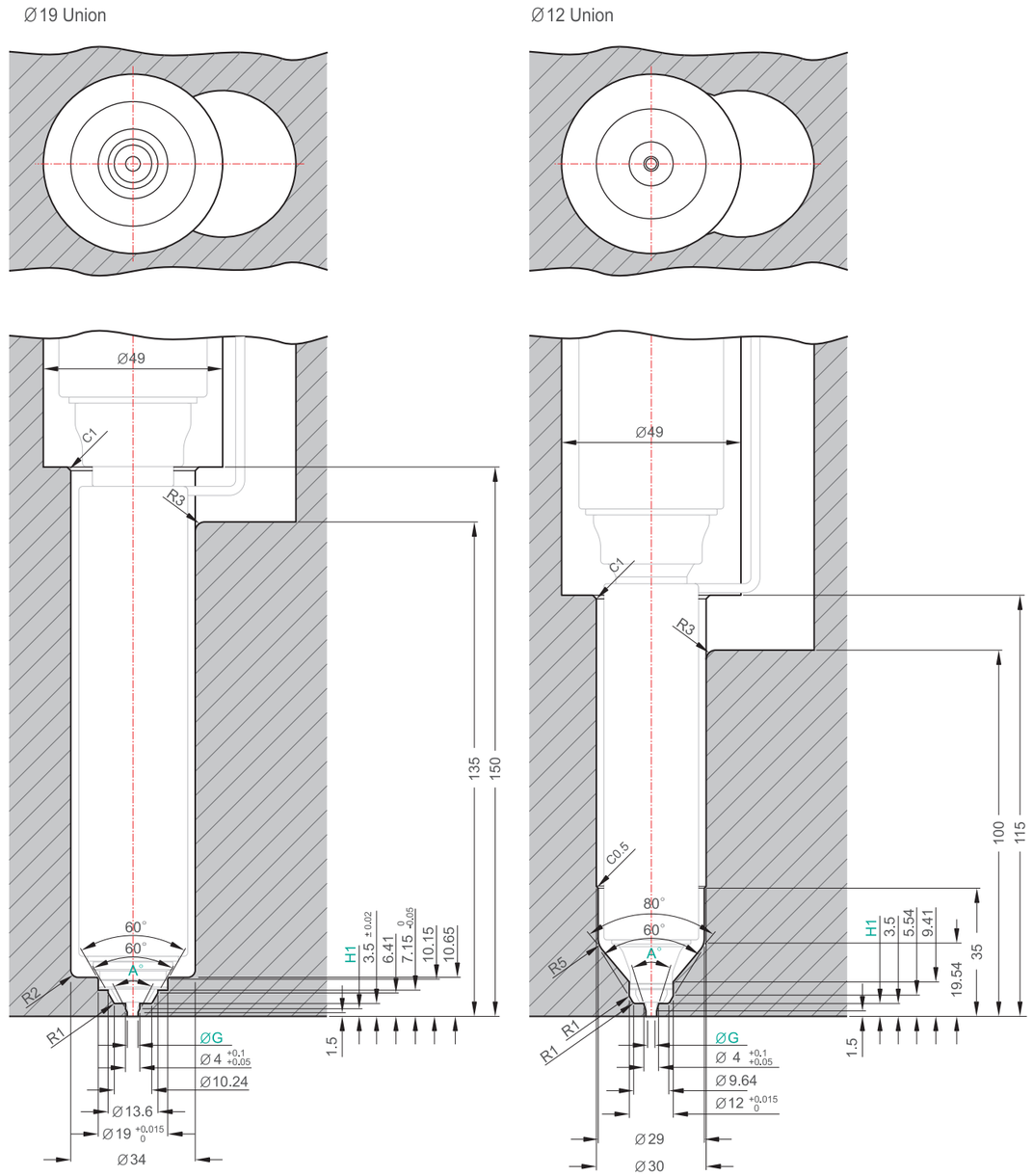

	TIMO 32 19		
G	2	2.5	3
H1	3.23	2.8	2.87
A°	60°	60°	40°

	TIMO 32 12		
G	2	2.5	3
H1	3.23	2.8	2.87
A°	60°	60°	40°

● Cylinder area machining of TIMO

CPS 70 machining (Pneumatic cylinder)

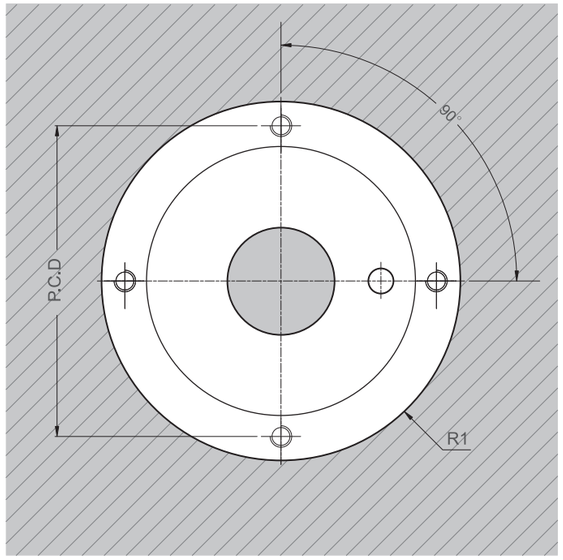

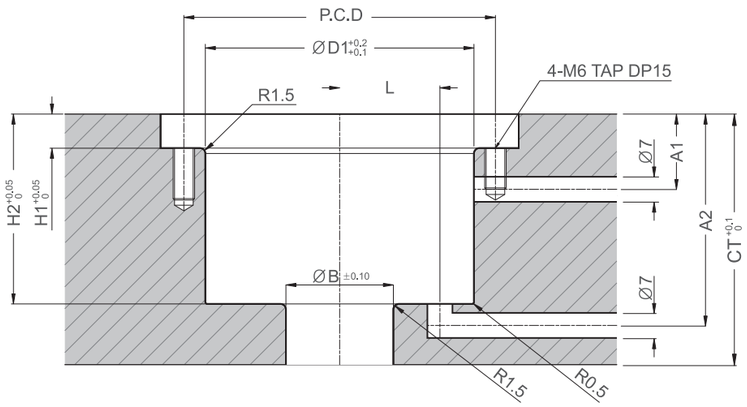

Clamping plate T	CPS 70
CT(min)	80T

Unit : mm

Cylinder model	A1	A2	B	D1	P.C.D	H1	H2	L	R1
CPS 70	21	59	30	75	87	9.5	53	28	R49.75

● Flange area machining of TIMO

Flange area machining

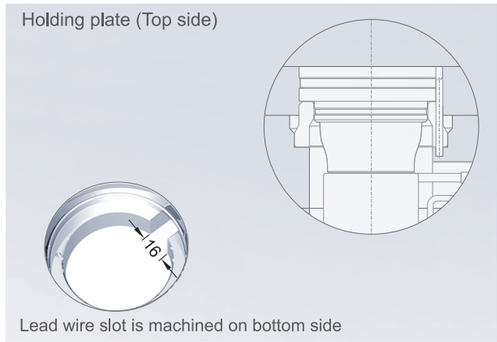

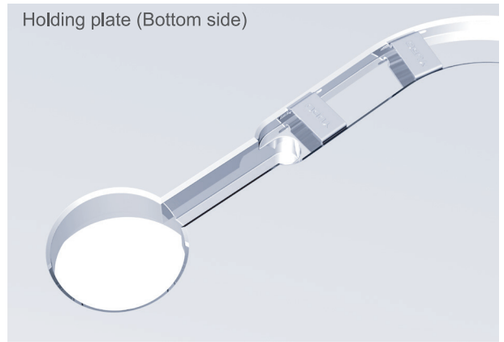

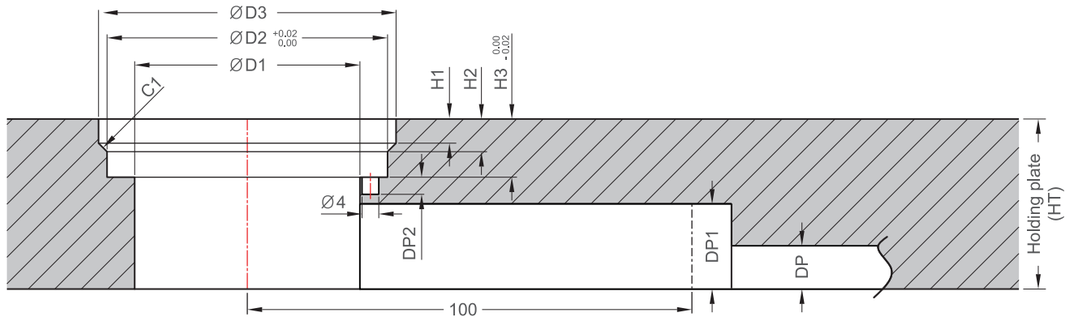

Unit : mm

Nozzle model	D1	D2	D3	H1	H2	H3	DP	DP1	DP2
TIMO 32	53	66	70	5.5	7.5	13.5	10	21	4

● The dimension (H2 / H3) is changeable according to the mold thickness.

Lead wire slot

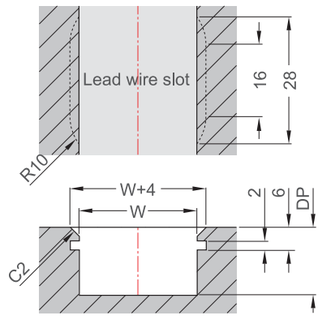

Unit : mm

W	Zone Q'ty	DP
16	1	10
26	1 ~ 2	10
	3 ~ 4	15
	5 ~ 6	20
46	5 ~ 8	15
	9 ~ 12	20